(12) INTERNATIONAL APPLICATION PUBLISHED UNDER THE PATENT COOPERATION TREATY (PCT)

(19) World Intellectual Property Organization
International Bureau

(43) International Publication Date
22 January 2015 (22.01.2015)

WIPO | PCT

(10) International Publication Number
WO 2015/009753 A1

(51) International Patent Classification: *E21B 43/26* (2006.01)

(21) International Application Number: PCT/US2014/046744

(22) International Filing Date: 15 July 2014 (15.07.2014)

(25) Filing Language: English

(26) Publication Language: English

(30) Priority Data:
61/846,526 15 July 2013 (15.07.2013) US

(71) Applicant: **LOS ALAMOS NATIONAL SECURITY, LLC** [US/US]; Los Alamos National Laboratory, P.O. Box 1663, MS A187, Los Alamos, NM 87545 (US).

(72) Inventors: **MACE, Jonathan, Lee**; 1030 Sioux Street, Los Alamos, NM 87544 (US). **BRONISZ, Lawrence, E.**; 1618 Camino Uva, Los Alamos, NM 87544 (US). **STEEDMAN, David, W.**; 20 Coppermallow Road, Santa Fe, NM 87506 (US). **BRADLEY, Christopher, Robert**; 12B Plaza Del Cerros (CR 94D), Chimayo, NM 87522 (US).

(74) Agent: **DUNCAN, Sandon, M.**; Klarquist Sparkman, LLC, One World Trade Center, Suite 1600, 121 SW Salmon Street, Portland, OR 97204 (US).

(81) Designated States *(unless otherwise indicated, for every kind of national protection available)*: AE, AG, AL, AM, AO, AT, AU, AZ, BA, BB, BG, BH, BN, BR, BW, BY, BZ, CA, CH, CL, CN, CO, CR, CU, CZ, DE, DK, DM, DO, DZ, EC, EE, EG, ES, FI, GB, GD, GE, GH, GM, GT, HN, HR, HU, ID, IL, IN, IR, IS, JP, KE, KG, KN, KP, KR, KZ, LA, LC, LK, LR, LS, LT, LU, LY, MA, MD, ME, MG, MK, MN, MW, MX, MY, MZ, NA, NG, NI, NO, NZ, OM, PA, PE, PG, PH, PL, PT, QA, RO, RS, RU, RW, SA, SC, SD, SE, SG, SK, SL, SM, ST, SV, SY, TH, TJ, TM, TN, TR, TT, TZ, UA, UG, US, UZ, VC, VN, ZA, ZM, ZW.

(84) Designated States *(unless otherwise indicated, for every kind of regional protection available)*: ARIPO (BW, GH, GM, KE, LR, LS, MW, MZ, NA, RW, SD, SL, SZ, TZ, UG, ZM, ZW), Eurasian (AM, AZ, BY, KG, KZ, RU, TJ, TM), European (AL, AT, BE, BG, CH, CY, CZ, DE, DK, EE, ES, FI, FR, GB, GR, HR, HU, IE, IS, IT, LT, LU, LV, MC, MK, MT, NL, NO, PL, PT, RO, RS, SE, SI, SK, SM, TR), OAPI (BF, BJ, CF, CG, CI, CM, GA, GN, GQ, GW, KM, ML, MR, NE, SN, TD, TG).

Declarations under Rule 4.17:

— *of inventorship (Rule 4.17(iv))*

Published:

— *with international search report (Art. 21(3))*

(54) Title: MULTI-STAGE GEOLOGIC FRACTURING

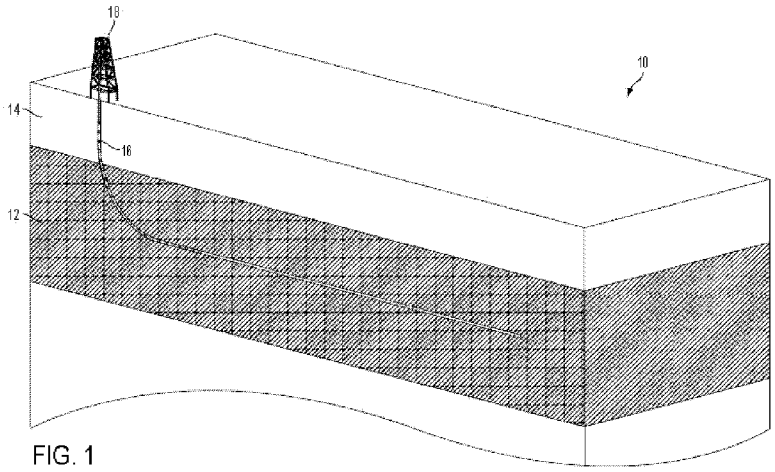

FIG. 1

(57) Abstract: Explosive geologic fracturing methods, devices, and systems can be used in combination with other geologic fracturing means, such as hydraulic fracturing methods, devices and systems, or other fluid-based fracturing means. An exemplary method comprises introducing an explosive system into a wellbore in a geologic formation, detonating the explosive system in the wellbore to fracture at least a first portion of the geologic formation adjacent to the wellbore, and introducing pressurized fluid into the wellbore to enhance the fracturing of the first portion of the geologic formation. Such multi-stage fracturing can further enhance the resulting fracturing of a geologic formation relative to explosive fracturing alone.

WO 2015/009753 A1

MULTI-STAGE GEOLOGIC FRACTURING

CROSS REFERENCE TO RELATED APPLICATION

This application claims the benefit of U.S. Provisional Patent Application No. 61/846,526, filed July 15, 2013, entitled "MULTI-STAGE GEOLOGIC FRACTURING," which is incorporated by reference herein in its entirety.

ACKNOWLEDGMENT OF GOVERNMENT SUPPORT

This invention was made with government support under Contract No. DE-AC52-06NA25396 awarded by the U.S. Department of Energy. The government has certain rights in the invention.

PARTIES TO JOINT RESEARCH AGREEMENT

The research work described here was performed under a Cooperative Research and Development Agreement (CRADA) between Los Alamos National Laboratory (LANL) and Chevron under the LANL-Chevron Alliance, CRADA number LA05C10518-PTS-21.

FIELD

This application is related to systems and methods for use in geologic fracturing, such as in relation to accessing geologic energy resources.

BACKGROUND

Resources such as oil, gas, water and other materials may be extracted from geologic formations, such as deep shale formations, by creating fracture zones and resulting permeability within the formation, thereby enabling flow pathways for fluids (including liquids and/or gasses). For hydrocarbon based materials encased within geologic formations, this fracturing is typically achieved by a process known as hydraulic fracturing. Hydraulic fracturing is the propagation of fractures in a rock layer using a pressurized fracturing fluid. This type of fracturing is done from a wellbore drilled into reservoir rock formations. The energy from the injection of a pressurized fracturing fluid creates new channels in the rock which can increase the extraction rates and ultimate recovery of hydrocarbons. The fracture width may be maintained after the injection is stopped by introducing a proppant, such as grains of sand, ceramic, or other particulates into the injected fluid. Additionally, by its nature, the direction and distance a hydraulic fracture travels is mainly dependent on the direction of the maximum principle (in-situ) stress in the reservoir. Although this technology has the potential to provide

access to large amounts of efficient energy resources, the practice of hydraulic fracturing has been restricted in parts of the world due to logistical or regulatory constraints. Therefore, a need exists for alternative fracturing methods.

SUMMARY

Explosive devices, systems and related methods, including propellants or other high pressure gas generating mechanisms, are described herein for use in geologic fracturing. Explosive fracturing methods can be used in combination with other fracturing methods, such as hydraulic fracturing methods. Any number of successive fracturing stages can be used. Such multi-stage fracturing can further enhance the resulting fracturing of a geologic formation relative to explosive fracturing alone. Any of the various explosive systems, devices, and related methods disclosed herein can be used in such a multi-stage fracturing method.

In some methods, an explosive system is introduced into a wellbore in a geologic formation and detonated to fracture at least a first portion of the geologic formation adjacent to the wellbore. A primary advantaged of this type of fracturing is an initial engineered set of explosive fractures that are not dependent on the in-situ reservoir stress. These engineered fractures can provide a system of enhanced permeability and/or serve as seed fractures for additional fracturing. Subsequently, if additional fracturing is desired, a pressurized fluid (liquids, gasses, solid particles, and/or combinations thereof) can be introduced into the wellbore to enhance the fracturing caused by the explosives of the first portion of the geologic formation. Any number additional explosive or pressurized fluid fracturing stages can optionally be performed to enhance the fracturing of the geologic structure.

The explosive fracturing may result in destruction of at least part of the wellbore and/or obstruction of at least part of the wellbore with rubble. In such instances, the wellbore can be redrilled after the detonation and prior to the introduction of a pressurized fluid to reform the wellbore and/or clear out rubble such that the introduced pressurized fluid is less obstructed.

Detonation of the explosive system in the wellbore can cause a fractured zone and/or rubblization zone in the geologic formation around the wellbore, as described herein. Subsequently introduced pressurized fluid can travel through such fractured and/or rubblized zones and cause further fracturing and expansion of the radius of fracturing from the wellbore into the geologic formation, and/or otherwise increase the permeability of the geologic formation beyond that provided by explosive fracturing alone or hydraulic fracturing alone. Thus, the combination of explosive and pressurized fluid fracturing methods can provide synergistic results not possible otherwise.

The foregoing and other features and advantages of the disclosure will become more apparent from the following detailed description, which proceeds with reference to the accompanying figures.

BRIEF DESCRIPTION OF THE DRAWINGS

FIG. 1 is a cross-sectional view of a geologic formation accessed with a wellbore.

FIG. 2 is an enlarged view of a portion of FIG. 1 showing a proximal portion of an exemplary tool string being inserted into the wellbore.

FIG. 3 is a cross-sectional view of a tool string portion positioned in a curved portion of a wellbore.

FIG. 4 is a cross-sectional view of a tool string distal portion having a tractor mechanism for pulling through the wellbore.

FIG. 5 is a cross-sectional view of a tool string completely inserted into a wellbore and ready for detonation.

FIG. 6 is a cross-sectional view of an exemplary unit of a tool string in a wellbore, taken perpendicular to the longitudinal axis.

FIG. 7 is a perspective view of an exemplary tool string portion.

FIGS. 8A-8G are schematic views of alternative exemplary tool strings portions.

FIG. 9 is a perspective view of an exemplary unit of a tool string.

FIG. 10 is a partially cross-sectional perspective view of a portion of the unit of FIG. 9.

FIG. 11 is an enlarged view of a portion of FIG. 10.

FIG. 12 is an exploded view of an exemplary explosive system.

FIGS. 13 and 14A are cross-sectional views of the system of FIG. 12 taken along a longitudinal axis.

FIGS. 14B-14D are cross-sectional views showing alternative mechanical coupling systems.

FIG. 15 is a diagram representing an exemplary detonation control module.

FIGS. 16A-16C are perspective views of one embodiment of a detonation control module.

FIG. 17 is a circuit diagram representing an exemplary detonation control module.

FIG. 18 is a flow chart illustrating an exemplary method disclosed herein.

FIG. 19 is a partially cross-sectional perspective view of a theoretical shock pattern produced by a detonated tool string.

FIGS. 20 and 21 are vertical cross-sectional views through a geologic formation along a bore axis, showing rubbilization patterns resulting from a detonation.

FIG. 22A is a schematic representing high and low stress regions in a geologic formation a short time after detonation.

FIG. 22B is a schematic showing the degree of rubbilization in the geologic formation a short time after detonation.

FIG. 22C is a schematic illustrating different geologic layers present in the rubbilization zone.

FIG. 23 is a graph of pressure as a function of distance from a bore for an exemplary detonation.

FIG. 24 is a graph showing exemplary gas production rates as a function of time for different bore sites using different methods for fracturing.

FIG. 25 is a graph showing exemplary total gas production as a function of time for different bore sites using different methods for fracturing.

FIG. 26A illustrates detonation planes resulting from the ignition of pairs of propellant containing tubes substantially simultaneously along their entire length and an intermediate pair of high explosive containing tubes from their adjacent ends.

FIG. 26B illustrates an exemplary arrangement of interconnected alternating pairs of propellant and high explosive containing tubes.

FIG. 27 is a cross-sectional view of a portion of an exemplary casing for an explosive unit having a groove on the outer surface.

FIG. 28 is a perspective view of an exemplary explosive unit having grooves on the outer surface.

FIG. 29 is a perspective view of another exemplary explosive unit having grooves on the outer surface.

FIG. 30 is a perspective view of an exemplary explosive unit having recessed pockets on the outer surface.

FIG. 31 is a cross-sectional view of a portion of an exemplary casing for an explosive unit having a recessed pocket on the outer surface.

FIG. 32 is a cross-sectional view of an explosive unit having a layer of oxidizer-rich material along the inner side of the casing.

FIG. 33 is a cross-sectional view of an explosive unit having a casing comprising a fibrous composite material.

FIG. 34 is a flow-diagram of an exemplary method for fracturing a geologic formation.

DETAILED DESCRIPTION

I. Introduction

Although the use of high energy density (HED) sources, such as explosives, for the purpose of stimulating permeability in hydrocarbon reservoirs has been previously investigated, the fracture radius away from the borehole with such technologies has never extended for more than a few feet radially from the borehole. Permeability stimulation in tight formations is currently dominated by the process known as hydraulic fracturing. The term "hydraulic fracturing" is used herein to include any type of geologic fracturing that utilizes pressurized fluid. The term "fluid" as used herein includes any flowable material, including liquids, gasses, solid particles, and combinations thereof. With hydraulic fracturing, fluid is pumped into the reservoir via a perforated wellbore to hydraulically fracture the rock providing a limited network of propped fractures for hydrocarbons to flow into a production well. The fracturing extent and direction are dependent on the in-situ formation stress and in particular the maximum principle formation stress.

Past investigations and present practice of stimulating permeability in tight formations do not take full advantage of the information gained from detailed analysis of both the formation properties and the customization of a HED system to create optimal permeability zones. Some systems disclosed herein take into account best estimates of the shock wave behavior in the specific geologic formation and can be geometrically configured and adjusted in detonation time to enhance the beneficial mixing of multiple shock waves from multiple sources to extend the damage/rubblization of the rock to economic distances. Shock waves travel with different velocities and different attenuation depending on physical geologic properties. These properties include strength, porosity, density, hydrocarbon content, water content, saturation and a number of other material attributes.

As such, explosive systems, compositions, and methods are disclosed herein which are designed to be used to fracture geologic formations to provide access to energy resources, such as geothermal and hydrocarbon reservoirs. Some disclosed methods and systems, such as those for enhancing permeability in tight geologic formations, involve the beneficial spacing and timing of HED sources, which can include explosives and specially formulated propellants. In some examples, the disclosed methods and systems include high explosive (HE) systems, propellant (PP) systems, and other inert systems. The beneficial spacing and timing of HED sources provides a designed coalescence of shock waves in the geologic formation for the designed purpose of permeability enhancement.

Beneficial spacing of the HED sources can be achieved through an engineered system designed for delivery of the shock to the geologic formations of interest. A disclosed high

fidelity mobile detonation physics laboratory (HFMDPL) can be utilized to control the firing of one or more explosive charges and /or to control the initiation of one or more propellant charges, such as in a permeability enhancing system.

Some advantages over conventional hydrofracturing which can be attributed to the HED compositions include the following: (1) the resulting rubblized zone around the stimulated wellbore can comprise a substantially 360° zone around the wellbore, as compared to traditional hydrofractures which propagate in a single plane from the wellbore in the direction of the maximum principle stress in the rock or extents along a pre-existing fracture; (2) the useful rubblizaton zone can extend to a significant radius from the bore, such as a radius or average radius, expected to be at least a three times improvement over a continuous charge of equal yield, such as a six times improvement; and (3) the ability to generate explosions tailored to specific geologic profiles, thereby directing the force of the explosion radially away from the bore to liberate the desired energy resource without resulting in substantial pulverization of geologic material immediately adjacent to the wellbore, which can clog flow pathways thus reducing the production of energy or resources.

Various exemplary embodiments of explosive devices, systems, methods and compositions are described herein. The following description is exemplary in nature and is not intended to limit the scope, applicability, or configuration of the disclosure in any way. Various changes to the described embodiments may be made in the function and arrangement of the elements described herein without departing from the scope of the invention.

II. Terms and Abbreviations

i. Terms

As used herein, the term detonation (and its grammatical variations) is not limited to traditional definitions and instead also includes deflagration and other forms of combustion and energetic chemical reactions.

As used herein, the term detonator is used broadly and includes any device configured to cause a chemical reaction, including explosive detonators and propellant initiators, igniters and similar devices. In addition, the term detonation is used broadly to also include detonation, initiation, igniting and combusting. Thus a reference to detonation (e.g. in the phrase detonation control signal) includes detonating an explosive charge (if an explosive charge is present) such as in response to a fire control signal and initiating the combustion of a propellant charge (if a propellant charge is present) such as in response to a fire control signal.

In addition a reference to “and/or” in reference to a list of items includes the items individually, all of the items in combination and all possible sub-combinations of the items.

Thus, for example, a reference to an explosive charge and/or a propellant charge means "one or more explosive charges", "one or more propellant charges" and "one or more explosive charges and one or more propellant charges.

As used in this application, the singular forms "a," "an," and "the" include the plural forms unless the context clearly dictates otherwise. Additionally, the term "includes" means "comprises." Further, the term "coupled" generally means electrically, electromagnetically, and/or physically (*e.g.*, mechanically or chemically) coupled or linked and does not exclude the presence of intermediate elements between the coupled or associated items absent specific contrary language.

It is further to be understood that all sizes, distances and amounts are approximate, and are provided for description. Although methods and materials similar or equivalent to those described herein can be used in the practice or testing of the present disclosure, suitable methods and materials are described below. All publications, patent applications, patents, and other references mentioned herein are incorporated by reference in their entirety. In case of conflict, the present specification, including explanations of terms, will control.

ii. Abbreviations

Al: Aluminum

CL-20: 2,4,6,8,10,12-hexanitro-2,4,6,8,10,12-hexaazaisowurtzitane

DAAF: diaminoazoxyfurazan

ETN: erythritol tetranitrate

EGDN: ethylene glycol dinitrate

FOX-7: 1,1-diamino-2,2-dinitroethene

GAP: Glycidyl azide polymer

HMX: octogen, Octahydro-1,3,5,7-tetranitro-1,3,5,7-tetrazocine

HNS: hexanitrostilbene

HE: high explosive

HED: high energy density

HFMDPL: High Fidelity Mobile Detonation Physics Laboratory

LAX-112: 3,6-diamino-1,2,4,5-tetrazine-1,4-dioxide

NG: nitroglycerin

NTO: 3-nitro-1,2,4-triazol-5-one

NQ: nitroguanidine

PETN: pentaerythritol tetranitrate

PP: propellant(s)

RDX: cyclonite, hexogen, 1,3,5-Trinitro-1,3,5-triazacyclohexane, 1,3,5-Trinitrohexahydro-s-triazine

TAGN: triaminoguanidine nitrate

TNAZ: 1,3,3-trinitroazetidine

TATB: triaminotrinitrobenzene

TNT: trinitrotoluene

III. Exemplary Systems

Disclosed are systems for enhancing permeability of a tight geologic formation, such as closed fractures or unconnected porosity of a geologic formation. In some examples, a system for enhancing permeability includes at least one high explosive (HE) system. For example, an HE system can include one or more HE, such as a cast curable HE. Desirable characteristics of an HE system can include one or more of the following: the HE system is environmentally benign; the HE is safe to handle, store and utilize in all required configurations, and in industrialized wellbore environments; the HE has a high total stored energy density (e.g. total stored chemical energy density), such as at least 8 kJ/cc, at least 10 kJ/cc, or at least 12 kJ/cc; and the HE is highly non-ideal. A non-ideal HE can be defined, for example, as an HE in which 30% to 40% or more of the meta-stably stored chemical energy is converted to HE hot product gases after the detonation front (shock front) in a deflagrating Taylor Wave. Further details of HE chemical compositions are described below (see, for example, Section VIII).

Some exemplary systems for enhancing permeability include one or more propellant (PP) systems, such as one or more PP systems in the axial space along the bore between the HE systems, which can add more useable energy to the system and/or help direct energy from the HE systems radially into the geologic formation rather than axially along the bore, without defeating the goal of wave interaction sought through the axial spatial separation of charges. The PP systems can pressurize the bore and/or add uncompressible or low-compressibility material in the bore between the HE systems the helps high-pressure energy from the HE systems from travelling axially along the bore. The PP systems can further increase or sustain high pressure in the annular region of the bore between the outside of the HE systems and the bore walls. Sustaining a high pressure in the bore helps to support the radially outwardly traveling wave of energy, causing the region of significant fracture to be extended radially. As used herein, a bore is any hole formed in a geologic formation for the purpose of exploration or extraction of natural resources, such as water, gas or oil. The term bore may be used interchangeably with wellbore, drill hole, borehole and other similar terms in this application.

The pressure generated by the combustion products of the PP confined in the bore is a contributor to increasing the radial travel of HE energy waves. Desirable characteristics of an exemplary PP system include one or more of the following: the PP system is environmentally benign; the material is safe to handle, store and utilize in all required configurations, and in industrialized wellbore environments; and the PP deflagrates without transitioning into a detonation within the context of the separately timed geometry- and material-specific HE. The active material in a PP system can comprise one or more of variety of materials, including: inert materials, such as brine, water, and mud; and energetic materials, such as explosive, combustible, and/or chemically reactive materials. These materials can be environmentally benign and safe to handle, store and utilize in required configurations and in industrialized bore environments. It is contemplated that the PP material may be fluid, semi-fluid or solid in nature. Desirably, the PP systems comprise or produce a product that has low compressibility. Further details of exemplary propellants are described below (see, for example, Section VIII).

Optimized geometry- and material-specific configurations of the disclosed systems enable carefully timed, multiple detonation events along HE-PP strings within the bore environment. The disclosed systems optimize the interaction of multiple shock waves and rarefaction waves within the surrounding formation, thereby producing 360 degree rubblization zones, which can be at least three to four times the radius produced by an equivalent radius of a continuous detonating column of the same HE. Further, optimized material layers between the bore wall and radially outer surfaces of the HE-PP string can minimize the amount of energy wasted on crushing/pulverizing geologic material near the bore/epicenter, thereby optimizing the transition of available energy into the geologic material in a manner that maximizes useful rubblization effects and maximizes flow channels through the rubblized material.

FIG. 1 shows a cross-section of an exemplary geologic formation 10 that comprises a target zone 12 comprising an energy resource, which is positioned below another geologic layer, or overburden 14. An exemplary bore 16 extends from a rig 18 at the surface, through the overburden 14, and into the target zone 12. The bore 16 can be formed in various configurations based on the shape of the geologic formations, such as by using known directional drilling techniques. In the illustrated example, the bore 16 extends generally vertically from a rig 18 through the overburden 14 and then curves and extends generally horizontally through the target zone 12. In some embodiments, the bore 16 can extend through two or more target zones 12 and/or through two or more overburdens 14. In some embodiments, the bore can be generally vertical, angled between vertical and horizontal, partially curved at one or more portions, branched into two or more sub-bores, and/or can have other known bore configurations. In some embodiments, the target zone can be at or near the surface and not covered by an

overburden. The target zone 12 is shown having a horizontal orientation, but can have any shape or configuration.

As shown in FIG. 2, after the bore 16 is formed, an explosive tool string 20 can be inserted into the bore. The string 20 can comprise one or more units 22 coupled in series via one or more connectors 24. The units 22 can comprise explosive units, propellant units, inert units, and/or other units, as described elsewhere herein. The units 22 and connectors 24 can be coupled end-to-end in various combinations, along with other components, to form the elongated string 20. The string 20 can further comprise a proximal portion 26 coupling the string to surface structures and control units, such as to support the axial weight of the string, to push the string down the bore, and/or to electrically control the units 22.

As shown in FIG. 3, one or more of the connectors 24 can comprise flexible connectors 28 and one or more of the connectors 24 can comprise rigid connectors 30. The flexible connectors 28 can allow the string to bend or curve, as shown in FIG. 3. In the example of FIG. 3, every other connector is a flexible connector 28 while the other connectors are rigid or semi-rigid connectors 30. In other strings 20, the number and arrangement of flexible and rigid connectors can vary. The flexible connectors 28 can be configured to allow adjacent units 22 to pivot off-axis from each other in any radial direction, whereas the rigid connectors 30 can be configured to maintain adjacent units 22 in substantial axial alignment. The degree of flexibility of the flexible connectors 28 can have varying magnitude. In some embodiments, the string 20 can comprising at least one flexible connector, or swivel connector, and configured to traverse a curved bore portion having a radius of curvature of less than 500 feet. Additional instances of flexible connectors at smaller intervals apart from each other can further reduce the minimum radius of curvature traversable by the string. Furthermore, each joint along the string can be formed with a given amount of play to allow additional flexing of the string. Joints can be formed using threaded connected between adjoining units and connectors and are designed to allow off-axis motion to a small degree in each joint, as is describe further below.

As shown in FIG. 3, the distal end of the string 20 can comprise a nose-cone 32 or other object to assist the string in traveling distally through the bore 16 with minimal resistance. In some embodiments, as shown in FIG. 4, the distal end of the string 20 can comprise a tractor 34 configured to actively pull the string through the bore 16 via interaction with the bore distal to units 22.

FIG. 5 shows an exemplary string 20 fully inserted into a bore 16 such that units 22 have passed the curved portion of the bore and are positioned generally in horizontal axial alignment within the target zone 12. In this configuration, the string 20 can be ready for detonation.

FIG. 6 shows a cross-section of an exemplary unit 22 positioned within a bore 16. The unit 22 contains a material 36, which can comprise a high energy explosive material, a propellant, brine, and/or other materials, as described herein. A fluid material 38, such as brine, can fill the space between the outer surface of the string 20 (represented by the unit 22 in FIG. 6) and the inner wall of the bore 16. The inner diameter of the unit 22, D1, the outer diameter of the unit and the string 20, D2, and the diameter of the bore, D3, can vary as described herein. For example, D1 can be about 6.5 inches, D2 can be about 7.5 inches, and D3 can be about 10 inches.

Each unit 22 can comprise an HE unit, a PP unit, an inert unit, or other type of unit. Two or more adjacent units 22 can form a system, which can also include one or more of the adjoining connectors. For example, FIG. 7 shows an exemplary string 20 comprising a plurality of HE units 40 and a plurality of PP units 42. Each adjacent pair of HE units 40 and the intermediate connector 24 can comprise an HE system 44. Each adjacent pair of PP units 42 and the three adjoining connectors 24 (the intermediate connector and the two connectors at the opposite ends of the PP units), can comprise a PP system 46. In other embodiments, any number of units 20 of a given type can be connected together to from a system of that type. Furthermore, the number and location of connectors in such system can vary in different embodiments.

Connectors 24 can mechanically couple adjacent units together to support the weight of the string 20. In addition, some of the connectors 24 can comprise electrical couplings and/or detonator control modules for controlling detonation of one or more of the adjacent HE or PP units. Details of exemplary detonator control modules are described below.

In some embodiments, one or more HE systems in a string can comprise a pair of adjacent HE units and a connector that comprises a detonator control module configured to control detonation of both of the adjacent HE units of the system. In some embodiments, one or more HE systems can comprise a single HE unit and an adjacent connector that comprises a detonator control module configured to control detonation of only that single HE unit.

Each unit can be independently detonated. Each unit can comprise one or more detonators or initiators. The one or more detonators can be located anywhere in the unit, such as at one or both axial ends of the unit or intermediate the axial ends. In some embodiments, one or more of the units, such as HE units, can be configured to be detonated from one axial end of the unit with a single detonator at only one axial end of the unit that is electrically coupled to the detonator control module in an adjacent connector.

In some units, such as PP units, the unit is configured to be detonated or ignited from both axial ends of the unit at the same time, or nearly the same time. For example, a PP unit can

comprise two detonators/igniters/initiators, one at each end of the PP unit. Each of the detonators of the PP unit can be electrically coupled to a respective detonator control module in the adjacent connector. Thus, in some embodiments, one or more PP systems in a string can comprise a pair of adjacent PP units and three adjacent connectors. The three adjacent connectors can comprise an intermediate connector that comprises a detonator control module that is electrically coupled to and controls two detonators, one of each of the two adjacent PP units. The two connectors at either end of the PP system can each comprise a detonator control module that is electrically coupled to and controls only one detonator at that end of the PP system. In PP systems having three or more PP units, each of the intermediate connectors can comprise detonator control modules that control two detonators. In PP systems having only a single PP unit, the PP system can comprise two connectors, one at each end of the PP unit. In embodiments having detonators intermediate to the two axial ends of the unit, the detonator can be coupled to a detonation control module coupled to either axial end of the unit, with wires passing through the material and end caps to reach the detonation control module.

FIGS. 8A-8G show several examples strings 20 arranged in different manners, with HE unit detonators labeled as De and PP unit detonators labeled as Dp. FIG. 8A shows a portion of a string similar to that shown in FIG. 7 comprising alternating pairs of HE systems 44 and PP systems 46. FIG. 8B shows a portion of a string having HE systems 44 and PP systems as well as inert units 48 positioned therebetween. Any number of inert units 48 can be used along the string 20 to position the HE units and PP units in desired positions relative to the given geologic formations. Instead of inert units 48 (e.g., containing water, brine or mud), or in addition to the inert units 48, units positioned between the HE units and/or the PP units in a string can comprise units containing non-high energy explosives (e.g., liquid explosives). Any combination of inert units and non-high energy units can be includes in a string in positions between the HE units and/or PP units, or at the proximal and distal ends of a string.

FIG. 8C shows a portion of a string 20 comprising a plurality of single-unit HE systems 50 alternating with single-unit PP systems 52. In this arrangement, each connector is coupled to one end of a HE unit and one end of a PP unit. Some of these connectors comprise a detonation control module configured to control only a PP detonator, while others of these connectors comprise a detonation control module configured to control one PP detonator and also control one HE detonator. FIG. 8D shows an exemplary single-unit PP system 52 comprising a connector at either end. FIG. 8E shows an exemplary single-unit HE system 50 comprising a single connector at one end. The single-unit systems 50, 52, the double-unit systems 44, 46, and/or inert units 48 can be combined in any arrangement in a string 20. In some embodiments, one or more of the connectors do not comprise a detonation control module.

FIG. 8F shows a string of several adjacent single-unit HE systems 50, each arranged with the detonator at the same end of the system. In this arrangement, each connector controls the detonator to its left. FIG. 8G shows a string of double-unit HE systems 44 connected directly together. In this arrangement, each double-unit HE system 44 is coupled directly to the next double-unit HE system without any intermediate connectors. In this matter, some of the connectors in a string can be eliminated. Connectors can also be removed or unnecessary when inert units 48 are included in the string.

In some embodiments, a system for enhancing permeability includes one or more HE systems, such as one to twelve or more HE systems and one or more PP systems, such as one to twelve or more PP systems, which are arranged in a rack/column along a string 20. In some examples, each HE system is separated from another HE system by one or more PP systems, such as one to eight or more PP systems. In some embodiments, the string 20 can comprise a generally cylindrical rack/column of about 20 feet to about 50 feet in length, such as about 30 feet to about 50 feet. In some examples, each HE system and each PP system is about 2 feet to about 12 feet in length, such as about 3 feet to about 10 feet in length.

Each of the units 20 can comprise a casing, such as a generally cylindrical casing 22 as shown in cross-section in FIG. 6. In some examples, the casing is designed to contain the HE, PP, or inert material. The casing can also separate the contained material from the fluid 38 that fills the bore 16 outside of the casing. In some examples, the casing completely surrounds the contained material to separate it completely from the fluid filling the bore. In some examples, the casing only partial surrounds the contained material thereby only partially separating it from the material filling the bore.

In some embodiments, the PP units can be ignited prior to the HE units. This can cause the PP ignited product (e.g., a gas and/or liquid) to quickly expand and fill any regions of the bore outside of the HE units, including regions of the bore not filled with other fluid. The quickly expanding PP product can further force other fluids in the bore further into smaller and more distant cracks and spaces between the solid materials of the target zone before the HE units detonate. Filling the bore with the PP product and/or other fluid prior to detonation of the HE units in this manner can mitigate the crushing of the rock directly adjacent to the bore caused by the HE explosion because the fluid between the HE units and the bore walls acts to transfer the energy of the explosion further radially away from the centerline of the bore without as violent of a shock to the immediately adjacent bore walls. Avoiding the crushing of the bore wall material is desirable for it reduces the production of sand and other fine particulates, which can clog permeability paths and are therefore counterproductive to liberating energy resources from regions of the target zone distant from the bore. Moreover, reducing the near-bore crushing and

pulverization reduces the energy lost in these processes, allowing more energy to flow radially outward further with the shock wave and contribute to fracture in an extended region.

The dimensions (size and shape) and arrangement of the HE and PP units and connectors can vary according to the type of geologic formation, bore size, desired rubblization zone, and other factors related to the intended use. In some examples, the case(s) 22 can be about ¼ inches to about 2 inches thick, such as ¼, ½, ¾, 1, 1 ¼, 1 ½, 1 ¾, and 2 inches thick. In some examples, the material between the case 22 and the bore wall 16 can be about 0 inches to about 6 inches thick. The cases 22 can contact the bore walls in some locations, while leaving a larger gap on the opposite side of the case from the contact with the bore. The thickness of the material in the bore between the cases and the bore wall can therefore vary considerably along the axial length of the string 20. In some examples, the HE (such as a non-ideal HE) is about 4 inches to about 12 inches in diameter, within a case 22. For example, a disclosed system includes a 6 ½ inch diameter of HE, ½ inch metal case (such aluminum case) and 1 ¼ inch average thickness of material between the case and the bore wall (such as a 1 ¼ inch thick brine and/or PP layer) for use in a 10 inch bore. Such a system can be used to generate a rubblization zone to a radius of an at least three times improvement over a continuous charge of equal yield, such as a six times improvement. For example, the explosive charges can be detonated and/or the combustion of each propellant charge initiated to fracture the section of the underground geologic formation in a first fracture zone adjacent to and surrounding the section of the bore hole and extending into the underground geologic formation to a first depth of penetration away from the section of the bore hole and plural second fracture zones spaced apart from one another and extending into the underground geologic formation to a second depth of penetration away from the section of the bore hole greater than the first depth of penetration, wherein the second fracture zones are in the form of respective spaced apart disc-like fracture zones extending radially outwardly from the bore hole and/or the second depth of penetration averages at least three times, such as at least six times, the average first depth of penetration. In some examples, a disclosed system includes a 9 ½ inch diameter of HE (such as a non-ideal HE), ¼ inch metal case (such aluminum case) and 1 inch average thickness of material between the case and the bore wall (such as a 1 inch thick brine and/or PP layer) for use in a 12 inch borehole. It is contemplated that the dimensions of the system can vary depending upon the size of the bore.

In some embodiments, the system for enhancing permeability further includes engineered keyed coupling mechanisms between HE and PP units and the connectors. Such coupling mechanisms can include mechanical coupling mechanisms, high-voltage electrical coupling mechanisms, communications coupling mechanisms, high voltage detonator or initiation systems (planes), and/or monitoring systems. In some examples, independently timed

high-precision detonation and initiation planes for each HE and PP section, respectively, can be included. Such planes can include customized programmable logic for performing tasks specific to the system operated by the plane, including safety and security components, and each plane can include carefully keyed coupling mechanisms for mechanical coupling, including coupling detonators/initiators into the HE/PP, high-voltage coupling, and communications coupling.

In some examples, cast-cured HE and PP section designs, including high-voltage systems, communication systems, detonator or initiation systems, and monitoring systems, are such that they can be manufactured, such as at an HE Production Service Provider Company, and then safely stored and/or "just in time" shipped to a particular firing site for rapid assembly into ruggedized HE-PP columns, testing and monitoring, and deployment into a bore. Specific formulations utilized, and the geometrical and material configurations in which the HE and PP systems are deployed, can be central for producing a desired rubblization effects in situ within each particular geologic formation. In some examples, these optimized geometric and material configurations can be produced via specifically calibrated numerical simulation capabilities that can include many implementations of models into the commercial code ABAQUS. In further examples, any of the disclosed systems can be developed/up-dated by use of a High Fidelity Mobile Detonation Physics Laboratory (HFMDPL), as described in detail herein (see, for example, Section IX).

IV. Exemplary High Explosive and Propellant Units and Systems

FIG. 9 shows an exemplary unit 100, which can comprise a HE unit, a PP unit, or an inert unit. The unit 100 comprises a generally cylindrical, tubular case 102 having at least one interior chamber for containing a material 150, such as HE material, PP material, brine, or other material. The unit 100 comprises a first axial end portion 104 and a second opposite axial end portion 106. Each axial end portion 104, 106 is configured to be coupled to a connector, to another HE, PP or inert unit, or other portions of a bore insertion string. The casing 102 can comprise one or more metals, metal alloys, ceramics, and/or other materials or combinations thereof. In some embodiments, the casing 102 comprises aluminum or an aluminum alloy.

The axial end portions 104, 106 can comprise mechanical coupling mechanisms for supporting the weight of the units along a string. The mechanical coupling mechanisms can comprise external threaded portions 108, 110, plate attachment portions 112, 114, and/or any other suitable coupling mechanisms. For example, FIGS. 14A-14D show representative suitable mechanical coupling mechanisms. The axial end portions 104, 106 can further comprise electrical couplings, such as one or more wires 116, that electrically couple the unit to the adjacent connectors, other units in the string, and/or to control systems outside of the bore. The

wires 116 can pass axially through the length of the unit 100 and extend from either end for coupling to adjacent components.

As shown in detail in FIG. 10, the unit 100 can further comprise a first end cap 118 coupled to the axial end portion 106 of the case 102 and/or a second end cap 120 coupled to the opposite axial end portion 108 of the case 102. The end caps 118, 120 can comprise an annular body having a perimeter portion that is or can be coupled to the axial end of the case 102. The end caps 118, 120 can be fixed to the casing 102, such as be welding, adhesive, fasteners, threading, or other means. The end caps 118, 120 can comprise any material, such as one or more metals, metal alloys, ceramics, polymeric materials, etc. In embodiments with the end caps welded to the casing, the full penetration welds can be used in order to preclude thing metal-to-metal gaps in which migration of chemical components could become sensitive to undesired ignition. In embodiments having polymeric end caps, thin contact gaps can exist between the caps and the casing with less or no risk of undesired ignition. Polymeric end caps can be secured to the casing via threading and/or a polymeric retaining ring. Furthermore, a sealing member, such as an O-ring, can be positioned between the end cap and the casing to prevent leakage or material 150 out of the unit. In other embodiments, metallic end caps can be used with annular polymeric material positioned between the end caps and the casing to preclude metal-to-metal gaps.

The outer diameter of the units and/or connectors can be at least partially covered with or treated with a friction-reducing layer and/or surface treatment. This treatment layer or treatment can comprise at least one of the following: solid lubricants, such as graphite, PTFE containing materials, MoS2, or WS2; liquid lubricants, such as petroleum or synthetic analogs, grease; or aqueous based lubricants. Surface treatments can include attached material layers, such as WS2 (trade name Dicronite®); MoS2, metals having high lubricity, such as tin (Sn), polymer coatings exhibiting high lubricity such as fluoropolymers, polyethylene, PBT, etc.; physically deposited, electroplated, painting, powder coating; or other materials.

Wires 116 (such as for controlling, powering and triggering the detonation of the energetic material) pass through or at least up to each unit 100. Any number of wires 116 can be included, such as one, two, four, or more. At least some of the wires 116 can pass through at least one of the end caps 118, 120 on the ends of each unit, as shown in FIG. 10. The penetrations in the end caps and the penetrating wires 116 can be free of thin metal-to-metal gaps in which migration of chemical components could become sensitive to undesired ignition.

In some embodiments, the end caps 118, 120 can comprise one or more penetration glands 122 designed to obviate undesired ignition by eliminating or reducing thin metal-to-metal gaps and preventing leakage of material 150 out of the unit 100. The penetration glands 122 can

be configured to provide thin gaps between polymeric and metal surface penetration holes. The compliance of polymer-to-metal or polymer-to-polymer thin gaps can prevent sufficient compression and friction for sensitive chemical components to ignite.

As shown in more detail in FIG. 11, each penetration gland 122 can receive a wire 116 with a polymer jacket 124 passing through a hole 126 in the end cap 118, 120. The wire 116 can be sealed with a compliant seal, such as an O-ring 128. The seal is compressed in place by a polymeric fastener 130, which is secured to the end cap, such as via threads, and tightened to compress the seal. The fastener 130 can comprise a hole through its axis through which the wire 116 passes.

In other embodiments, a penetration gland can be comprised of a threaded hole with a shoulder, a gland screw with a coaxial through-hole, said screw having a shoulder which compresses a seal (such as an o-ring) in order to seal the cable passing through it. Coaxial cable can allow two conductors to be passed through each seal gland with an effective seal between the inside of the unit and the outside of the unit.

The unit 100 can further comprise at least one detonator holder 140 and at least one detonator 142 and at least one axial end of the unit, as shown in FIG. 10. The term detonator includes any device used to detonate or ignite the material 150 within the unit, or initiate or cause the material 150 to detonate or ignite or explode, or to initiate or cause a chemical reaction or expansion of the material 150. In an HE filled unit, the unit can comprise a single detonator 142 at one end of the unit, such as at the end portion 106, with no second detonator at the opposite end of the unit. In a PP filled unit, the unit can comprise a detonator 142 at both axial end portions of the unit, each being generally similar in structure and function.

The detonator holder 140, as shown in FIG. 10, for either a HE unit or a PP unit, can comprise a cup-shaped structure positioned within a central opening in the end cap 118. The holder 140 can be secured to and sealed to the end cap 118, such as via threads 144 and an O-ring 146. The holder 140 extends axially through the end cap 118 into the chamber within the casing 102 such that the holder 140 can be in contact with the material 150. The holder 140 can comprise a central opening 148 at a location recessed within the casing and the detonator 142 can be secured within the opening 148. An internal end 152 of the detonator can be held in contact with the material 150 with a contact urging mechanism to ensure the detonator does not lose direct contact with the material 150 and to ensure reliable ignition of the material 150. The urging mechanism can comprise a spring element, adhesive, fastener, or other suitable mechanism.

The detonator 142 can further comprise an electrical contact portion 154 positioned within the recess of the holder 140. The electrical contact portion 154 can be positioned to be

not extend axially beyond the axial extend of the rim of the holder 140 to prevent or reduce unintended contact with the detonator 142. The electrical contact portion 154 can be electrically coupled to a detonation control module in an adjacent connector via wires.

In some embodiments, a unit can comprise right-handed threads on one axial end portion of the casing and left-handed threads on the other axial end portion of the casing. As shown in FIG. 12, the oppositely threaded ends of each unit can facilitate coupling two units together with an intermediate connector. In the example shown in FIGS. 12-14A, a system 200 can be formed by coupling an exemplary first unit 202 and an exemplary second unit 204 together with an exemplary connector 206. FIGS. 13 and 14A show cross-sectional views taken along a longitudinal axis of the system 200 in an assembled state. The first and second units 202, 204 can be identical to or similar to the illustrated unit 100 shown in FIGS. 9-11, or can comprise alternative variations of units. For example, the units 202, 204 can comprise HE units that are similar or identical, but oriented in opposite axial directions such that their lone detonators are both facing the connector 206.

The connector 206 can comprise a tubular outer body 208 having first internal threads 210 at one end and second internal threads at the second opposite end, as shown in FIG. 12. Mechanical coupling of the units 202, 204, and connector 206 can be accomplished by rotating connector 206 relative to the units 202, 204 (such as with the units 202, 204 stationary), such that internal threads 210, 212 thread onto external threads 214, 216 of the units 202, 204, respectively. The rotation of the connector 206 can act like a turnbuckle to draw the adjacent units 202, 204 together. The threads 210, 212, 214, 216 can comprise buttress threads for axial strength.

After the adjacent pair of units 202, 204 are drawn together, locking plates 218, 220 can be attached to each unit end portion and engage slots 222, 224, respectively in each end of the connector outer body 208 to prevent unintentional unscrewing of the joint. Lock plates 218, 220 are attached to each unit by fastening means (*e.g.*, screws 240, 242 and screw holes 244, 246 in the unit case). The fastening means preferably do not pass through the case wall to avoid allowing the contained material 250 to escape and so that the system remains sealed. The lock plates 218, 220 prevent the connector 206 from unscrewing from the units 202, 204 to insure that the assembly stays intact.

The described threaded couplings between the units and the connectors can provide axial constraint of sections of a tool string to each other, and can also provide compliance in off-axis bending due to thread clearances. This can allow the tool string to bend slightly off-axis at each threaded joint such that it can be inserted into a bore which has a non-straight contour. One advantage of the described locking plate configuration is to eliminate the need for torquing the

coupling threads to a specified tightness during assembly in the field. In practice, the connector shoulders (226, 228 in FIG. 12) need not be tightened to intimately abut the unit shoulders (230, 232 in FIG. 12) axially, but some amount of clearance can be left between the connector and unit shoulders to assure torque is not providing any, or only minimal, axial pre-stress on the system. This small clearance can also enhance the off-axis bending compliance of the tool string in conjunction with the thread clearances.

The connector 206 can further comprise a detonation control module 260 contained within the outer body 208. The detonation control module 260 can be configured to be freely rotatable relative to the outer body 208 about the central axis of the connector, such as via rotational bearings between the outer body and the detonation control module. The detonation control module 260 can comprise a structural portion 262 to which the electrical portions 264 are mounted. The electrical portions 264 of the detonation control module 260 are described in more detail below.

During assembly of the connector 260 to the units 202, 204, the detonation control module 206 can be held stationary relative to the units 202, 204 while the outer body 208 is rotated to perform mechanical coupling. To hold the detonation control module 260 stationary relative to the units 202, 204, one or both of the units can comprise one or more projections, such as pins 266 (see FIG. 13), that project axially away from the respective unit, such as from the end cap~~s~~, and into a receiving aperture or apertures 268 in the structural portion 262 of the detonation control module 260. The pin(s) 266 can keep the detonation control module 260 stationary relative to the units 202, 204 such that electrical connections therebetween do not get twisted and/or damaged. In some embodiments, only one of the units 202, 204 comprises an axial projection coupled to the structural portion 262 of the detonation control module 260 to keep to stationary relative to the units as the outer casing is rotated.

The units 202, 204 can comprise similar structure to that described in relation to the exemplary unit 100 shown in FIGS. 9-11. As shown in FIGS. 13 and 14A, the unit 202 comprises electrical wires 270 extending through the material 250 in the unit and through glands 272 in an end cap 274. The unit 202 further comprises a detonator holder 276 extending through the end cap 272 and a detonator 278 extending through the holder 276. Unit 204 also comprises similar features. Electrical connections 280 of the detonator and 282 of the wires 270 can be electrically coupled to the detonation control module 260, as describe below, prior to threading the connector to the two units 202, 204.

FIGS. 14B-14D shows cross-sectional views of alternative mechanical coupling mechanisms for attaching the units to the connectors. In each of FIGS. 14B-14D, some portions of the devices are omitted. For example, the detonation control module, detonator, wiring, and

fill materials are not shown. The detonator holder and/or end caps of the units may also be omitted from these figures.

FIG. 14B shows an exemplary assembly 300 comprising a unit 302 (such as an HE or PP unit) and a connector 304. The unit 302 comprises a casing and/or end cap that includes a radially recessed portion 306 and an axial end portion 308. The connector 304 comprises an axial extension 310 positioned around the radially recessed portion 306 and an inner flange 312 positioned adjacent to the axial end portion 308. One or more fasteners 314 (e.g., screws) are inserted through the connector 304 at an angle between axial and radial. The fasteners 314 can be countersunk in the connector to preserve a smooth outer radial surface of the assembly. The fasteners 314 can extend through the inner flange 312 of the connector and through the axial end portion 308 of the unit, as shown, to mechanically secure the unit and the connector together. A sealing member 316, such as an O-ring, can be positioned between the inner flange 312 and the axial end portion 308, or elsewhere in the connector-unit joint, to seal the joint and prevent material contained within the assembly from escaping and prevent material from entering the assembly.

FIG. 14C shows another exemplary assembly 320 comprising a unit 322 (such as an HE or PP unit), a connector 324, and one or more locking plates 326. The unit 322 comprises a casing and/or end cap that includes a radially recessed portion 328 and an axial end portion 330. The connector 324 comprises an axial extension 332 positioned adjacent to the radially recessed portion 328 and an inner flange 334 positioned adjacent to the axial end portion 330. A sealing member 336, such as an O-ring, can be positioned between the inner flange 334 and the axial end portion 330, or elsewhere in the connector-unit joint, to seal the joint and prevent material contained within the assembly from escaping and prevent material from entering the assembly. The locking plate(s) 326 comprise a first ledge 338 that extends radially inwardly into a groove in unit 322, and a second ledge 340 that extends radially inwardly into a groove in the connector 324. The first and second ledges 338, 340 prevent the unit 322 and the connector 324 from separating axially apart from each other, locking them together. The plate(s) 326 can be secured radially to the assembly with one or more fasteners 342, such as screws, that extend radially through the plate 326 and into the connector 324 (as shown) or into the unit 322.

FIG. 14D shows yet another exemplary assembly 350 comprising a unit 352 (such as an HE or PP unit), a connector 354, and one or more locking plates 356. The unit 352 comprises a casing and/or end cap that includes a radially recessed portion 358 and an axial end portion 360. The connector 354 comprises an axial extension 362 positioned adjacent to the radially recessed portion 358 and an inner flange 364 positioned adjacent to the axial end portion 360. A sealing member 366, such as an O-ring, can be positioned between the inner flange 364 and the axial

end portion 360, or elsewhere in the connector-unit joint, to seal the joint and prevent material contained within the assembly from escaping and prevent material from entering the assembly. The locking plate(s) 356 comprise a first ledge 368 that extends radially inwardly into a groove in unit 352, and a second ledge 370 that extends radially inwardly into a groove in the connector 354. The first and second ledges 368, 370 prevent the unit 352 and the connector 354 from separating axially apart from each other, locking them together. The plate(s) 376 can be secured radially to the assembly with one or more resilient bands or rings 372, such as an elastomeric band, that extends circumferentially around the assembly 350 to hold the plate(s) to the connector 354 and to the unit 352. The band(s) 372 can be positioned in an annular groove to maintain a flush outer surface of the assembly 350.

The assemblies shown in FIGS. 14A-14D are just examples of the many different possible mechanical couplings that can be used in the herein described systems and assemblies. It can be desirable that the mechanical couplings allow for some degree of off-axis pivoting between the unit and the connector to accommodate non-straight bore, and/or that the mechanical coupling imparts minimal or no axial pre-stress on the string, while providing sufficient axial strength to hold the string axially together under its own weight when in a bore and with additional axial forces imparted on the string due to friction, etc.

PP units and systems can be structurally similar to HE units and systems, and both can be described in some embodiments by exemplary structures shown in FIGS. 9-14. However, while HE units can comprise only a single detonator, in some PP units and PP systems, the PP unit can comprise two detonators/ignition systems, one positioned at each end of the unit. The PP ignition systems can be configured to simultaneously ignite the PP material from both ends of the unit. The two opposed PP ignition systems can comprise, for example, ceramic jet ignition systems. The PP ignitions systems can rapidly ignite the PP material along the axial length of the PP unit to help ignite the PP material in a more instantaneous matter, rather than having one end of the unit ignite first then wait for the reaction to travel down the length of the PP unit to the opposite end. Rapid ignition of the PP material can be desirable such that the PP ignition product material can quickly expand and fill the bore prior to the ignition of the HE material.

V. Alternative Casings for Explosive Units

Explosive units disclosed herein can fracture rock near to the wellbore thus increasing permeability in the rock formation including a pathway into the wellbore. In explosive systems that include energetic materials encased in a casing made of aluminum or other similar ductile material, this increased permeability advantage can be defeated if the response of the ductile casing to detonation of the explosive is such that the deformed casing reduces permeability into

the wellbore. It is possible that the casing can expand under explosive loading in a ductile flow without fracture and break-up. This un-fractured casing can effectively become a well-bore lining, effectively sealing and/or blocking the pores of the wellbore, and reducing permeability and flow into the wellbore.

Thus alternative casing designs may be necessary to maintain desirable rock-to-wellbore permeability. For example, in some embodiments, the casing can include a tubular outer body comprising alternating thinner and thicker sections that cause shock-generated stress concentrations that promote shear and tensile fragmentation instead of ductile expansion and flow. In some embodiments, the casing can comprise grooves, recesses, pockets, and/or other stress concentrations to encourage fragmentation of the tubular outer body in response to the explosion.

In other embodiments, the casing can comprise non-ductile and/or reactive material which responds to explosive or high temperature loading by brittle failure, breaking apart, and/or chemically reacting with the energetic materials and/or the borehole environment rather than forming a ductile liner against the wellbore wall. In some embodiments, the casing can be perforated to increase permeability through the casing and/or to release explosive energy into the rock and reduce ductile expansion of the casing. In some embodiments, the casing can comprise material that disintegrates, burns, oxidizes, powderizes, dissolves, chemically reacts, and/or otherwise responds to the explosion without reducing the permeability of the wellbore. For example, in some embodiments, the casing can comprise fiber reinforced composite material having fibers that burn or react in response to the explosion.

Such systems and casings can be configured so as to reduce the adherence of casing material to the wall of the bore upon detonation of the explosive material. The reduction in adherence to the wall can be relative to a smooth-walled, right-cylindrical casing that features uniform ductile expansion in reaction to detonation and thereby forms a lining or layer of the casing material along the wall of the wellbore and thereby reduces the permeability of the wellbore. The reduction in adherence of the casing material to the wall of the wellbore can be provided by the decomposition, fragmenting, burning, disintegration, or other breaking down of the casing.

FIG. 27 shows a cross-sectional view of a portion of an exemplary tubular outer body 800 having a groove 802 formed in the outer surface 804. The groove 802 can have various shapes and dimensions. The groove 802 provides a stress concentration at the bottom 806 of the groove where the wall of the outer body 800 is thinnest. The depth of the groove, the radius of curvature of the bottom 806 of the groove, and other factors can affect the degree of stress concentration caused by the groove 802. Upon explosion, the outer body 800 is encouraged to

fracture along the groove 802, helping to increase fragmentation of the casing and increase permeability of the wellbore after the explosion. An exemplary casing can include any number of such grooves in a variety of patterns. The grooves can be machined, cast or otherwise formed in one or both of the interior and exterior surfaces of the wall of the casing body. The geometry of the grooves can be selected to provide sufficient strength prior to detonation and to resist premature jetting or venting during the explosion and prior to the intended fragmentation.

FIG. 28 shows an example of an explosive unit 810 comprising a casing 812 having a tubular outer body 814 and opposing end caps 816, 818. The unit 810 can further comprise a detonation module 820 and explosive material within the casing 812. The outer body 814 includes a plurality of longitudinal grooves 822 and circumferential grooves 824 that intersect to form a network of stress concentrations. The outer body 814 has a reduced thickness at the grooves 822, 824 and a relatively greater thickness at the rectangular regions 826 defined between the grooves. The outer body 814 can include any number of such grooves, and the spacing between the grooves and geometry of the grooves can vary as desired. Upon explosive of the unit 810, the grooves 822, 824 can cause the rectangular regions 826 to fragment apart at the grooves. FIG. 29 shows another example of an explosive unit 830 comprising a casing 832 having a tubular outer body 834 with intersecting grooves 836, 838. The grooves 836, 838 extend in opposite helical patterns around the outer body 834 and define diamond shaped, rhomboid, or otherwise quadrilateral thicker regions between the grooves. A plurality of such casings can be coupled together, such as previously described to provide a system of casings configured to minimize adherence of casing material to the wall of the bore when fractured by detonation of explosives within the casings.

FIG. 30 shows an exemplary explosive unit 850 having comprising a casing 852 having a tubular outer body 854 and opposing end caps 856, 858. The unit 850 can further comprise a detonation module 860 and explosive material within the casing 852. The outer body 854 includes a plurality recesses or pockets 862 having a reduce wall thickness relative to the raised portions 864 of the outer body between the pockets 862. The raised portions 864 can form an intersecting pattern, as shown, having longitudinal portions 866 and circumferential portions 868 that intersect. In other embodiments, the raised portions can comprise other patterns, such as helically extending portions and/or isolated portions. The pockets 862 can comprise generally rectangular shaped regions, as shown. In other embodiments, the thin-walled portions can have various other shapes and sizes. The boundaries between the thin-walled portions, or pockets, and the thick-walled or raised portion can create stress concentrations that encourage the casing the fragment upon explosion of the unit.

FIG. 31 shows a partial cross-sectional view of the tubular outer body 854 of FIG. 30, taken along section line 31-31, showing the profile of one of the thin-walled pockets 862 between two thicker-walled portions 864. The pockets 862 have a circumferential span 870 and a longitudinal span (see FIG. 30). The transitions between the pockets 862 and the raised portions 864 can have a radius 874, which can be varied to directly affect the degree of stress concentration. Further the wall thickness 876 of the pocket can be varied to directly affect the degree of stress concentration.

With regard to the grooved embodiments and pockets embodiments, as well as other embodiments having non-smooth surfaces of the tubular outer body of the casing, the irregularities in the tubular outer body can be formed by machining them from a cylindrical, smooth-walled structure, by casting, and/or by other known means. In some embodiments, the tubular outer body comprises grooves, pockets, and/or other stress concentrating features on the inner surface instead of, or in addition to, on the outer surface.

FIG. 32 shows a cross-sectional view of an exemplary explosive unit 880 having a casing 882 with a smooth-walled tubular outer body 884, two opposing end caps 886 with respective detonators 888, an energetic material 890 disposed within the casing, and an oxidizer material layer 892 positioned around the energetic material 890 adjacent to or against the inner surface of the tubular outer body 884. Upon detonation of the energetic material 890, the oxidizer material 892 can cause the tubular outer body 886 to oxidize and thereby at least partially or entirely powderize or otherwise disintegrate. The tubular outer body 884 can be comprised of an oxidizable material, such as aluminum. By disintegrating after detonation, the outer body 884 is less likely to reduce the permeability of the wellbore after the explosion. In other embodiments, an oxidizer layer can be used with a casing having an outer body that is not smooth-walled. For example, the outer body can include stress concentrations such as grooves or pockets to enhance the disintegration or fragmentation of the casing.

FIG. 33 is a cross-sectional view of another exemplary explosive unit 894 that comprises a fibrous casing 896 defining an internal chamber 898. The casing 896 can comprise a fibrous composite material, such as a fiber reinforced composite material. The fibrous material of the casing 896 can be configured to burn or otherwise chemically react or decompose in response to detonation of an explosive material within the internal chamber 898.

VI. Exemplary Detonation Control Module and Electrical Systems

FIG. 15 is a block diagram illustrating an exemplary detonation control module 700. Detonation control module 700 is activated by trigger input signal 701 and outputs a power pulse 702 that triggers a detonator. In some embodiments, output power pulse 702 triggers a

plurality of detonators. Trigger input signal 701 can be a common trigger signal that is provided to a plurality of detonation control modules to trigger a plurality of detonators substantially simultaneously. Detonators may detonate explosives, propellants, or other substances.

Detonation control module 700 includes timing module 703. Timing module 703 provides a signal at a controlled time that activates a light-producing diode 704. Light-producing diode 704, which in some embodiments is a laser diode, illuminates optically triggered diode 705 in optically triggered diode module 706, causing optically triggered diode 705 to conduct. In some embodiments, optically triggered diode 705 enters avalanche breakdown mode when activated, allowing large amounts of current flow. When optically triggered diode 705 conducts, high-voltage capacitor 707 in high-voltage module 708 releases stored energy in the form of output power pulse 702. In some embodiments, a plurality of high-voltage capacitors are used to store the energy needed for output power pulse 702.

FIG. 16A illustrates exemplary detonation control module 709. Detonation control module 709 includes timing module 710, optically triggered diode module 711, and high-voltage module 712. Connectors 713 and 714 connect timing module 710 with various input signals such as input voltages, ground, trigger input signal(s), and others. A timing circuit 715 includes a number of circuit components 716. Exemplary circuit components include resistors, capacitors, transistors, integrated circuits (such as a 555 or 556 timer), and diodes.

Timing module 710 also includes light-producing diode 717. Timing circuit 715 controls activation of light-producing diode 717. In some embodiments, light-producing diode 717 is a laser diode. Light-producing diode 717 is positioned to illuminate and activate optically triggered diode 718 on optically triggered diode module 711. Optically triggered diode 718 is coupled between a high-voltage capacitor 719 and a detonator (not shown).

As shown in FIG. 16A, timing module 710 is mechanically connected to high-voltage module 712 via connectors 720 and 721. Optical diode module 711 is both mechanically and electrically connected to high-voltage module 712 via connectors 722 and mechanically connected via connector 723.

FIG. 16B illustrates optically triggered diode module 711. When optically triggered diode 718 is activated, a conductive path is formed between conducting element 724 and conducting element 725. The conductive path connects high-voltage capacitor 719 with a connector (shown in FIG. 17) to a detonator (not shown) via electrical connectors 722.

FIG. 16C illustrates high-voltage module 712. Connectors 726 and 727 connect high-voltage capacitor 719 to two detonators, “Det A” and “Det B.” In some embodiments, each of connectors 726 and 727 connect high-voltage capacitor 719 to two detonators (a total of four). In other embodiments, detonation control module 709 controls a single detonator. In still other

embodiments, detonation control module 709 controls three or more detonators. High-voltage capacitor 719 provides an output power pulse to at least one detonator (not shown) via connectors 726 and 727. Connectors 728 and 729 provide a high-voltage supply and high-voltage ground used to charge high-voltage capacitor 719. High-voltage module 712 also includes a bleed resistor 730 and passive diode 731 that together allow charge to safely drain from high-voltage capacitor 719 if the high-voltage supply and high-voltage ground are disconnected from connectors 728 and/or 729.

FIG. 17 is a schematic detailing an exemplary detonation control module circuit 732 that implements a detonation control module such as detonation control module 709 shown in FIGS. 16A-16C. Detonation control module circuit 732 includes a timing circuit 733, an optically triggered diode 734, and high-voltage circuit 735. Timing circuit 733 includes a transistor 736. Trigger input signal 737 is coupled to the gate of transistor 736 through voltage divider 738. In FIG. 17, transistor 736 is a field-effect transistor (FET). Specifically, transistor 736 is a metal oxide semiconductor FET, although other types of FETs may also be used. FETs, including MOSFETs, have a parasitic capacitance that provides some immunity to noise and also require a higher gate voltage level to activate than other transistor types. For example, a bipolar junction transistor (BJT) typically activates with a base-emitter voltage of 0.7 V (analogous to transistor 736 having a gate voltage of 0.7 V). FETs, however, activate at a higher voltage level, for example with a gate voltage of approximately 4 V. A higher gate voltage (activation voltage) also provides some immunity to noise. For example, a 2V stray signal that might trigger a BJT would likely not trigger a FET. Other transistor types that reduce the likelihood of activation by stray signals may also be used. The use of the term “transistor” is meant to encompass all transistor types and does not refer to a specific type of transistor.

Zener diode 739 protects transistor 736 from high-voltage spikes. Many circuit components, including transistor 736, have maximum voltage levels that can be withstood before damaging the component. Zener diode 739 begins to conduct at a particular voltage level, depending upon the diode. Zener diode 739 is selected to conduct at a voltage level that transistor 736 can tolerate to prevent destructive voltage levels from reaching transistor 736. This can be referred to as “clamping.” For example, if transistor 736 can withstand approximately 24 V, zener diode 739 can be selected to conduct at 12 V.

A “high” trigger input signal 737 turns on transistor 736, causing current to flow from supply voltage 740 through diode 741 and resistor 742. A group of capacitors 743 are charged by supply voltage 740. Diode 741 and capacitors 743 act as a temporary supply voltage if supply voltage 740 is removed. When supply voltage 740 is connected, capacitors 743 charge. When supply voltage 740 is disconnected, diode 741 prevents charge from flowing back toward

resistor 742 and instead allows the charge stored in capacitors 743 to be provided to other components. Capacitors 743 can have a range of values. In one embodiment, capacitors 743 include three 25 μF capacitors, a 1 μF capacitor, and a 0.1 μF capacitor. Having capacitors with different values allows current to be drawn from capacitors 743 at different speeds to meet the requirements of other components.

There are a variety of circumstances in which supply voltage 740 can become disconnected but where retaining supply voltage is still desirable. For example, detonation control module 732 can be part of a system in which propellants are detonated prior to explosives being detonated. In such a situation, the timing circuitry that controls detonators connected to the explosives may need to continue to operate even if the power supply wires become either short circuited or open circuited as a result of a previous propellant explosion. The temporary supply voltage provided by diode 741 and capacitors 743 allows components that would normally have been powered by supply voltage 740 to continue to operate. The length of time the circuit can continue to operate depends upon the amount of charge stored in capacitors 743. In one embodiment, capacitors 743 are selected to provide at least 100 to 150 microseconds of temporary supply voltage. Another situation in which supply voltage 740 can become disconnected is if explosions are staggered by a time period. In some embodiments, supply voltage 740 is 6V DC and resistor 742 is 3.3 kΩ. The values and number of capacitors 743 can be adjusted dependent upon requirements.

Timing circuit 733 also includes a dual timer integrated circuit (IC) 744. Dual timer IC 744 is shown in FIG. 17 as a “556” dual timer IC (e.g., LM556). Other embodiments use single timer ICs (e.g. “555”), quad timer ICs (e.g. “558”), or other ICs or components arranged to perform timing functions. The first timer in dual timer IC 744 provides a firing delay. The firing delay is accomplished by providing a first timer output 745 (IC pin 5) to a second timer input 746 (IC pin 8). The second timer acts as a pulse-shaping timer that provides a waveform pulse as a second timer output 747 (IC pin 9). After voltage divider 748, the waveform pulse is provided to a MOSFET driver input 749 to drive a MOSFET driver IC 750. MOSFET driver IC 750 can be, for example, a MIC44F18 IC.

Timer ICs such as dual timer IC 744, as well as the selection of components such as resistors 751, 752, 753, 754, and 755 and capacitors 756, 757, 758, and 759 to operate dual timer IC 744, are known in the art and are not discussed in detail in this application. The component values selected depend at least in part upon the desired delays. In one embodiment, the following values are used: resistors 751, 752, and 755 = 100 kΩ; and capacitors 756 and 759 = 0.01 μF. Other components and component values may also be used to implement dual timer IC 744.

MOSFET driver IC 750 is powered by supply voltage 760 through diode 761 and resistor 762. In some embodiments, supply voltage 760 is 6V DC and resistor 762 is 3.3 kΩ. Supply voltage 760 can be the same supply voltage as supply voltage 740 that powers dual timer IC 744. A group of capacitors 763 are charged by supply voltage 760. Diode 761 and capacitors 763 act to provide a temporary supply voltage when supply voltage 760 is disconnected or shorted. As discussed above, diode 761 is forward biased between supply voltage 760 and the power input pin of MOSFET driver IC 750 (pin 2). Capacitors 763 are connected in parallel between the power input pin and ground. Capacitors 763 can have a range of values.

MOSFET driver output 764 activates a driver transistor 765. In some embodiments, driver transistor 765 is a FET. MOSFET driver IC 750 provides an output that is appropriate for driving transistor 765, whereas second timer output 747 is not designed to drive capacitive loads such as the parasitic capacitance of transistor 765 (when transistor 765 is a FET).

Resistor 766 and zener diode 767 clamp the input to driver transistor 765 to prevent voltage spikes from damaging transistor 765. When driver transistor 765 is activated, current flows from supply voltage 768, through diode 790 and resistor 769 and activates a light-producing diode 770. In some embodiments, driver transistor 765 is omitted and MOSFET driver output 764 activates light-producing diode 770 directly.

In some embodiments, light-producing diode 770 is a pulsed laser diode such as PLD 905D1S03S. In some embodiments, supply voltage 768 is 6V DC and resistor 769 is 1 kΩ. Supply voltage 768 can be the same supply voltage as supply voltages 740 and 760 that power dual timer IC 744 and MOSFET driver IC 750, respectively. A group of capacitors 771 are charged by supply voltage 768. Diode 790 and capacitors 771 act to provide a temporary supply voltage when supply voltage 768 is removed (see discussion above regarding diode 741 and capacitors 743). Capacitors 771 can have a range of values.

When activated, light-producing diode 770 produces a beam of light. Light-producing diode 770 is positioned to illuminate and activate optically triggered diode 734. In some embodiments, optically triggered diode 734 is a PIN diode. Optically triggered diode 734 is reverse biased and enters avalanche breakdown mode when a sufficient flux of photons is received. In avalanche breakdown mode, a high-voltage, high-current pulse is conducted from high-voltage capacitor 772 to detonator 773, triggering detonator 773. In some embodiments, additional detonators are also triggered by the high-voltage, high-current pulse.

High-voltage capacitor 772 is charged by high-voltage supply 774 through diode 775 and resistor 776. In one embodiment, high-voltage supply 774 is about 2800 V DC. In other embodiments, high-voltage supply 774 ranges between about 1000 and 3500 V DC. In some embodiments, a plurality of high-voltage capacitors are used to store the energy stored in high-

voltage capacitor 772. Diode 775 prevents reverse current flow and allows high-voltage capacitor to still provide a power pulse to detonator 773 even if high-voltage supply 774 is disconnected (for example, due to other detonations of propellant or explosive). Bleed resistor 777 allows high-voltage capacitor 772 to drain safely if high-voltage supply 774 is removed. In one embodiment, resistor 776 is 10 kΩ, bleed resistor 777 is 100 MΩ, and high-voltage capacitor 772 is 0.2 μF. High-voltage capacitor 772, bleed resistor 777, resistor 776, and diode 775 are part of high-voltage circuit 735.

FIG. 18 illustrates a method 778 of controlling detonation. In process block 779, a laser diode is activated using at least one timing circuit. In process block 780, an optically triggered diode is illuminated with a beam produced by the activated laser diode. In process block 781, a power pulse is provided from a high-voltage capacitor to a detonator, the high-voltage capacitor coupled between the optically triggered diode and the detonator.

FIGS. 15-18 illustrate a detonation control module in which a light-producing diode activates an optically triggered diode to release a high-voltage pulse to trigger a detonator. Other ways of triggering a detonator are also possible. For example, a transformer can be used to magnetically couple a trigger input signal to activate a diode and allow a high-voltage capacitor to provide a high-voltage pulse to activate a detonator. Optocouplers, for example MOC3021, can also be used as a coupling mechanism.

A detonation system can include a plurality of detonation control modules spaced throughout the system to detonate different portions of explosives.

VII. Exemplary Methods of Use

The herein described systems are particularly suitable for use in fracturing an underground geologic formation where such fracturing is desired. One specific application is in fracturing rock along one or more sections of an underground bore hole to open up cracks or fractures in the rock to facilitate the collection of oil and gas trapped in the formation.

Thus, desirably a plurality of spaced apart explosive charges are positioned along a section of a bore hole about which rock is to be fractured. The explosive charges can be placed in containers such as tubes and plural tubes can be assembled together in an explosive assembly. Intermediate propellant charges can be placed between the explosive charges and between one or more assemblies of plural explosive charges to assist in the fracturing. The propellant charges can be placed in containers, such as tubes, and one or more assemblies of plural propellant charges can be positioned between the explosive charges or explosive charge assemblies. In addition, containers such as tubes of an inert material with a working liquid being a desirable example, can be placed intermediate to explosive charges or intermediate to

explosive charge assemblies. This inert material can also be positioned intermediate to propellant charges and to such assemblies of propellant charges. The "working fluid" refers to a substantially non-compressible fluid such as water or brine, with saltwater being a specific example. The working fluid or liquid assists in delivering shockwave energy from propellant charges and explosive charges into the rock formation along the bore hole following initiation of combustion of the propellant charges and the explosion of the explosives.

In one specific approach, a string of explosive charge assemblies and propellant charge assemblies are arranged in end to end relationship along the section of a bore hole to be fractured. The number and spacing of the explosive charges and propellant charges, as well as intermediate inert material or working fluid containing tubes or containers, can be selected to enhance fracturing.

For example, a numerical/computational analysis approach using constituent models of the material forming the underground geologic formation adjacent to the bore hole section and of the explosive containing string can be used. These analysis approaches can use finite element modeling, finite difference methods modeling, or discrete element method modeling. In general, data is obtained on the underground geologic formation along the section of the bore hole to be fractured or along the entire bore hole. This data can be obtained any number of ways such as by analyzing core material obtained from the bore hole. This core material will indicate the location of layering as well as material transitions, such as from sandstone to shale. The bore hole logging and material tests on core samples from the bore hole, in the event they are performed, provide data on stratrigraphy and material properties of the geologic formation. X-ray and other mapping techniques can also be used to gather information concerning the underground geologic formation. In addition, extrapolation approaches can be used such as extrapolating from underground geologic formation information from bore holes drilled in a geologically similar (e.g., a nearby) geologic area.

Thus, using the finite element analysis method as a specific example, finite element modeling provides a predictive mechanism for studying highly complex, non-linear problems that involve solving, for example, mathematical equations such as partial differential equations. Existing computer programs are known for performing an analysis of geologic formations. One specific simulation approach can use a software program that is commercially available under the brand name ABAQUS, and more specifically, an available version of this code that implements a fully coupled Euler-Lagrange methodology.

This geologic data can be used to provide variables for populating material constitutive models within the finite element modeling code. The constitutive models are numerical representations of cause-and-effect for that particular material. That is, given a forcing function,

say, pressure due to an explosive load, the constitutive model estimates the response of the material. For example, these models estimate the shear strain or cracking damage to the geologic material in response to applied pressure. There are a number of known constitutive models for geologic materials that can be used in finite element analysis to estimate the development of explosive-induced shock in the ground. These models can incorporate estimations of material damage and failure related directly to cracking and permeability. Similar constitutive models also exist for other materials such as an aluminum tube (if an explosive is enclosed in an aluminum tube) and working fluid such as brine.

In addition, equations of state (EOS) exist for explosive materials including for non-ideal explosives and propellants. In general, explosive EOS equations relate cause-and-effect of energy released by the explosive (and propellant if any) and the resulting volume expansion. When coupled to a geologic formation or medium, the expansion volume creates pressure that pushes into the medium and causes fracturing.

In view of the above, from the information obtained concerning the geologic material along the section of a bore hole to be fractured, a constitutive model of the material can be determined. One or more simulations of the response of this material model to an arrangement of explosive charges (and propellant charges if any, and working fluid containers, if any) can be determined. For example, a first of such simulations of the reaction of the material to explosive pressure from detonating explosive charges, pressure from one or more propellant charges, if any, and working fluids if any, can be performed. One or more additional simulations (for example plural additional simulations) with the explosive charges, propellant charges if any, and/or working fluids, if any, positioned at different locations or in different arrangements can then be performed. The simulations can also involve variations in propellants and explosives. The plural simulations of the reaction of the material to the various simulated explosive strings can then be evaluated. The simulation that results in desired fracturing, such as fracturing along a bore hole with spaced apart rubblization areas comprising radially extending discs, as shown in FIG. 21, can then be selected. The selected arrangement of explosive charges, propellant charges, if any, and working fluids, if any, can then be assembled and positioned along the section of the bore hole to be fractured. This assembly can then be detonated and the propellant charges, if any, initiated to produce the fractured geologic formation with desired rubblization zones. Thus, rubblization discs can be obtained at desired locations and extended radii beyond fracturing that occurs immediately near the bore hole.

The timing of detonation of explosives and initiation of combustion of various propellant charges can be independently controlled as described above in connection with an exemplary timing circuit. For example, the explosives and propellant initiation can occur simultaneously or

the propellant charges being initiated prior to detonating the explosives. In addition, one or more explosive charges can be detonated prior to other explosive charges and one or more propellant charges can be initiated prior to other propellant charges or prior to the explosive charges, or at other desired time relationships. Thus, explosive charges can be independently timed for detonation or one or more groups of plural explosive charges can be detonated together. In addition, propellant charges can be independently timed for initiation or one or more groups of plural propellant charges can be initiated together. Desirably, initiation of the combustion propellant charges is designed to occur substantially along the entire length of, or along a majority of the length of, the propellant charge when elongated propellant charge, such as a tube, is used. With this approach, as the propellant charge burns, the resulting gases will extend radially outwardly from the propellant charges. For example, ceramic jet ejection initiators can be used for this purpose positioned at the respective ends of tubular propellant charges to eject hot ceramic material or other ignition material axially into the propellant charges. In one desirable approach, combustion of one or more propellant charges is initiated simultaneously at both ends of the charge or at a location adjacent to both ends of the charge. In addition, in one specific approach, assemblies comprising pairs of explosive charges are initiated from adjacent ends of explosive charges.

Desirably, the explosive charges are non-ideal explosive formulations such as previously described. In one specific desirable example, the charges release a total stored energy (e.g., chemically stored energy) equal to or greater than 12 kJ/cc and with greater than thirty percent of the energy released by the explosive being released in the following flow Taylor Wave of the detonated (chemically reacting) explosive charges.

In one approach, an assembly of alternating pairs of propellant containing tubes and explosive containing tubes, each tube being approximately three feet in length, was simulated. In the simulation, detonation of the explosives and simultaneous initiation of the propellant charges provided a simulated result of plural spaced apart rubblization discs extending radially outwardly beyond a fracture zone adjacent to and along the fractured section of the bore hole.

Desirably, the explosive charges are positioned in a spaced apart relationship to create a coalescing shock wave front extending radially outwardly from the bore hole at a location between the explosive charges to enhance to rock fracturing.

The system can be used without requiring the geologic modeling mentioned above. In addition, without modeling one can estimate the reaction of the material to an explosive assembly (which may or may not include propellant charges and working fluid containers) and adjust the explosive materials based on empirical observations although this would be less precise. Also, one can simply use strings of alternating paired explosive charge and paired

propellant charge assemblies. In addition, the timing of detonation and propellant initiation can be empirically determined as well. For example, if the geologic material shows a transition between sandstone and shale, one can delay the sandstone formation detonation just slightly relative to the detonation of the explosive in the region of the shale to result in fracturing of the geologic formation along the interface between the sandstone and shale if desired.

Unique underground fractured geologic rock formations can be created using the methods disclosed herein. Thus, for example, the explosion and/or propellant gas created fracture structures (if propellants are used) can be created adjacent to a section of a previously drilled bore hole in the geologic rock formation or structure. The resulting fractured structure comprises a first zone of fractured material extending a first distance away from the location of the previously drilled bore hole. Typically this first zone extends a first distance from the bore hole and typically completely surrounds the previously existing bore hole (previously existing allows for the fact that the bore hole may collapse during the explosion). In addition, plural second zones of fractured material spaced apart from one another and extending radially outwardly from the previously existing bore hole are also created. The second fracture zones extend radially outwardly beyond the first fracture zone. Consequently, the radius from the bore hole to the outer periphery or boundary of the second fracture zones is much greater than the distance to the outer periphery or boundary of the first zone of fractured material from the bore hole. More specifically, the average furthest radially outward distance of the second fracture zones from the previously existing bore hole is much greater than the average radially outward distance of the fractured areas along the bore hole in the space between the spaced apart second zones.

More specifically, in one example the second fracture zones comprise a plurality of spaced apart rubblization discs of fractured geologic material. These discs extend outwardly to a greater radius than the radius of the first fracture zone. These discs can extend radially outwardly many times the distance of the first zones, such as six or more times as far.

By using non-ideal explosive formulations, less pulverization or powdering of rock adjacent to the previous existing bore hole results. Powdered pulverized rock can plug the desired fractures and interfere with the recovery of petroleum products (gas and oil) from such fracturing. The use of propellant charges and working fluid including working fluid in the bore hole outside of the explosive charges can assist in the reduction of this pulverization.

Specific exemplary approaches for implementing the methodology are described below. Any and all combinations and sub-combinations of these specific examples are within the scope of this disclosure.

Thus, in accordance with this disclosure, a plurality of spaced apart explosive charges can be positioned adjacent to one another along a section of the bore hole to be fractured. These adjacent explosive charges can be positioned in pairs of adjacent explosive charges with the explosive charges of each pair being arranged in an end to end relationship. The charges can be detonated together or at independent times. In one desirable approach, the charges are detonated such that detonation occurs at the end of the first of the pair of charges that is adjacent to the end of the second of the pair of charges that is also detonated. In yet another example, the detonation of the explosive charges only occurs at the respective adjacent ends of the pair of charges. Multiple pairs of these charges can be assembled in a string with or without propellant charges and working liquid containers positioned therebetween. Also, elongated propellant charges can be initiated from opposite ends of such propellant charges and can be assembled in plural propellant charge tubes. These propellant charge tube assemblies can be positioned intermediate to at least some of the explosive charges, or explosive charge assemblies. In accordance with another aspect of an example, pairs of explosive charges can be positioned as intercoupled charges in end to end relationships with a coupling therebetween. Pairs of propellant charges can be arranged in the same manner.

In an alternative embodiment, although expected to be less effective, a plurality of spaced apart propellant charges and assemblies of plural propellant charges can be initiated, with or without inert material containing tubes therebetween, with the explosive charges eliminated. In this case, the rubblization zones are expected to be less pronounced than rubblization zones produced with explosive charges, and with explosive charge and propellant charge combinations, with or without the inert material containers therebetween.

Other aspects of method acts and steps are found elsewhere in this disclosure. This disclosure encompasses all novel and non-obvious combinations and sub-combinations of method acts set forth herein.

VIII. Exemplary Detonation Results

FIG. 19 shows exemplary shock patterns 500a, 500b, and 500c resulting from detonation of an exemplary string 502 within a bore (not shown) in a geologic formation. The string 502 comprises a first HE system 504a, a second HE system 504b, and a third HE system 504c, and two PP systems 506 positioned between the three HE systems. Each of the HE systems 504 is similar in construction and function to the exemplary HE system 200 shown in FIGS. 12-14, and comprises a pair of HE units and a connector. The PP systems 506 comprise a pair of PP units and three adjacent connectors. The HE system 504a is centered on a causes the

shock pattern 500a, the HE system 504b is centered on a causes the shock pattern 500b, and the HE system 504c is centered on a causes the shock pattern 500c.

Taking the HE unit 504a and its resulting shock pattern 500a as an example, each of the individual HE units 510, 512 causes nearly identical shock patterns 514, 516, respectively, that are symmetrical about the connector 518 that joins the HE units. Note that the illustrated shock pattern in FIG. 19 only shows a central portion of the resulting shock pattern from each HE system, and excludes portions of the shock pattern not between the centers of the two HE units. The portion of the shock pattern shown is of interest because the shocks from each of the two HE units interact with each other at a plane centered on the connector 518 between the two HE units, causing a significant synergistic shock pattern 520 that extends much further radially away from the bore and string compared to the individual shock patterns 514, 516 of each HE unit.

By spacing the HE charges appropriately there results a zone of interaction between the charges which leads to a longer effective radius of shock and rubblization. Spaced and timed charges can increase the effected radius by a factor of 3 to 4 when compared to a single large explosive detonation. Instead of a dominate fracture being created that extends in a planar manner from the wellbore, the disclosed system can result in an entire volume rubblization that surrounds the wellbore in a full 360 degrees. In addition, possible radial fracturing that extends beyond the rubblized zone can result.

The HE charges can be separated by a distance determined by the properties of the explosive material and the surrounding geologic formation properties that allows for the development and interaction of release waves (i.e., unloading waves which occur behind the "front") from the HE charges. A release wave has the effect of placing the volume of material into tension, and the coalescence of waves from adjacent charges enhances this tensile state. Consideration of the fact that rock fracture is favored in a state of tension, an exemplary multiple charge system favors optimum rock fracture by placing the rock in tension and enhancing the tensile state with the coalescence of waves from adjacent changes. Further, these fractures can remain open by self-propping due to asperities in the fracture surface.

Furthermore, the space between the HE charges includes PP systems. The PP systems cause additional stress state in the rock to enhance the effect of the main explosive charges.

FIG. 20 shows exemplary simulated results of a detonation as described herein. Two 2 meter long HE units, labeled 600 and 602, are connected in a HE system with an intermediate connector, and have a center-to-center separation L_1 of 3.5 m. The HE system is detonated in a bore 604 in a theoretically uniform rock formation. The contours are rock fracture level, with zone 20 representing substantially full rock fracture and zone X showing no fracture or partial

fracture. Expected damage regions directly opposite each charge are apparent, and these extend to about 3 meters radially from the bore 604. However, the region of the symmetry between the two charges shows a "rubble disk" 606 that extends considerably further to a distance R_1, *e.g.*, about 10 m, from the bore into the geologic formation. This simulation illustrates the extent of improved permeability through rock fracture that can be accomplished by taking advantage of shock wave propagation effects and charge-on-charge release wave interaction. Also, it is anticipated that late-time formation relaxation will induce additional fracturing between rubble disks. FIG. 20 is actually a slice through a 360° damage volume created about the axis of the charges.

In addition to the interaction between two adjacent charges, performance can be further improved by using an HE system with more than two HE units in series. For example, FIG. 21 shows three rubble disks created by four separated HE units, A, B, C, D. As in FIG. 20, FIG. 21 shows a slice through a 360° rubble zone.

Additional considerations in the design of explosive stimulation systems, such as described herein, can include the material and configuration of the HE unit container (*e.g.*, aluminum tube), the inclusion of propellant units within the string in the axial volume between the individual charges, and the introduction of brine or other borehole fluid to fill the annulus separating the explosive system and the host rock formation. The propellant has been shown to be effective in boosting and extending the duration of the higher rock stress state, consequently extending fracture extent. The HE unit container can be designed not simply to facilitate placement of the system into a wellbore but, along with the wellbore fluid, it can provide a means for mechanically coupling the blast energy to the surrounding rock. Moreover, coupling of the shock through the aluminum or similar material case avoids short-duration shock which can result in near-wellbore crushing of the rock, with accompanying diminishment of available energy available for the desired long-range tensile fracturing process. This coupling phenomenon is complementary to the energy release characteristics of the explosive as discussed elsewhere herein.

The disclosed systems and numerical simulations can include consideration of site geologic layering and other properties. The seismic impedance contrast between two material types can create additional release waves in the shock environment. For example, an interlayered stiff sandstone/soft shale site can be modeled. The resulting environment predicted for a hypothetical layered site subjected to a two-explosive stimulation is shown in FIGS. 22A-22C. As in previous figures, these figures again show a slice through a 360° rubble zone.

FIGS. 22A-22C do not show a final predicted state (*i.e.*, not full extent of fracturing), but show a point in time chosen to be illustrative of the phenomenology related to geologic layering.

FIG. 22A is a contour of rock stress, with high stress regions “a” and low stress regions “b”. FIG. 22B displays the volume of fractured material, with zone “c” referring to fully fractured rock and transitioning to zone “d” where the material is in incipient fracture state, and zone “e” where there is no fracture. FIG. 22C displays the same material volume as in FIG. 22B, but material changes between sandstone in zone “g” and shale in zone “h” are shown. FIGS. 22A-22C illustrate that rubblization disks that can be produced in specific geologic locations with reference to the corresponding geologic layers by properly designed charge length and spacing based on known geologic properties. For example, in FIG. 22C, a majority of the rubblization is confined to the shale regions “g” and away from the sandstone region “h”.

IX. Exemplary Chemical Compositions

Chemical compositions disclosed herein are developed to optimize for cylinder energy. Such compositions are developed to provide different chemical environments as well as variation in temperature and pressure according to the desired properties, such as according to the specific properties of the geologic formation in which energy resources are to be extracted.

Compositions disclosed herein can include explosive material, also called an explosive. An explosive material is a reactive substance that contains a large amount of potential energy that can produce an explosion if released suddenly, usually accompanied by the production of light, heat, sound, and pressure. An explosive charge is a measured quantity of explosive material. This potential energy stored in an explosive material may be chemical energy, such as nitroglycerin or grain dust, pressurized gas, such as a gas cylinder or aerosol can. In some examples, compositions include high performance explosive materials. A high performance explosive is one which generates an explosive shock front which propagates through a material at supersonic speed, i.e. causing a detonation, in contrast to a low performance explosive which instead causes deflagration. In some examples, compositions include one or more insensitive explosives. Compositions disclosed herein can also include one or more propellants. In some examples, a propellant includes inert materials, such as brine, water, and mud, and/or energetic materials, such as explosive, combustible, and/or chemically reactive materials, or combinations thereof.

It is contemplated that a disclosed unit can include any explosive capable of creating a desired rubblization zones. Compositions which may be used in a disclosed unit are provided, but are not limited to, U.S. Patent Nos. 4,376,083, 5,316,600, 6,997,996, 8,168,016, and 6,875,294 and USH1459 (United States Statutory Invention Registration, July 4, 1995- High energy explosives).

In some examples, a composition includes a high-energy density explosive, such as comprising at least 8 kJ/cc, at least 10 kJ/cc, or at least 12 kJ/cc. In some examples, the explosive is a cast-cured formulation. In some examples, the explosive is a pressed powder (plastic bonded or otherwise), melt-cast, water gels/slurries and/or liquid. In some cases thermally stable explosives are included due to high-temperatures in certain geological formations. In some examples, non-nitrate/nitrate ester explosives (such as, AN, NG, PETN, ETN, EGDN) are used for these formulations, such as HMX, RDX, TATB, NQ, FOX-7, and/or DAAF. In some examples, explosive compositions include binder systems, such as binder systems substantially free of nitrate ester plasticizers. For example, suitable binder systems can include fluoropolymers, GAP, polybutadiene based rubbers or mixtures thereof. In some examples, explosive compositions include one or more oxidizers, such as those having the anions perchlorate, chlorate, nitrate, dinitramide, or nitroformate and cations, such as ammonium, methylammonium, hydrazinium, guanidinium, aminoguanidinium, diaminoguanidinium, triaminoguanidinium, Li, Na, K, Rb, Cs, Mg, Ca, Sr, and Ba can be blended with the explosive to help oxidize detonation products. These can be of particular utility with fuel-rich binders are used such as polybutadiene based systems.

In some examples, the disclosed chemical compositions are designed to yield an energy density being greater than or equal to 8, 10, or 12 kJ/cc at theoretical maximum density, the time scale of the energy release being in two periods of the detonation phase with a large amount, greater than 25%, such as greater than 30% to 40%, being in the Taylor expansion wave and the produced explosive being a high density cast-cured formulation.

In some examples, the disclosed chemical compositions include one or more propellants. Propellant charges can be produced from various compositions used commonly in the field, being cast-cured, melt-cast, pressed or liquid, and of the general families of single, double or triple base or composite propellants. For example, a disclosed propellant unit comprises one or more oxidizers such as those having the anions perchlorate, chlorate, nitrate, dinitramide, or nitroformate and cations such as ammonium, methylammonium, hydrazinium, guanidinium, aminoguanidinium, diaminoguanidinium, triaminoguanidinium, Li, Na, K, Rb, Cs, Mg, Ca, Sr, and Ba. A propellant unit can also comprise one or more binders, such as one or more commonly used by one of ordinary skill in the art, such as polybutadiene, polyurethanes, perfluoropolyethers, fluorocarbons, polybutadiene acrylonitrile, asphalt, polyethylene glycol, GAP, PGN, AMMO/BAMO, based systems with various functionally for curing such as hydroxyl, carboxyl, 1,2,3-triazole cross-linkages or epoxies. Additives, such as transistion metal salt, for burning rate modification can also be included within a propellant unit. In some examples, one or more high-energy explosive materials are included, such as those from the

nitramine, nitrate ester, nitroaromatic, nitroalkane or furazan/furoxan families. In some examples, a propellant unit also includes metal/semimetal additives such as Al, Mg, Ti, Si, B, Ta, Zr, and/or Hf which can be present at various particle sizes and morphologies.

In some examples, chemical compositions include one or more high-performance explosives (for example, but not limited to HMX, TNAZ, RDX, or CL-20), one or more insensitive explosives (TATB, DAAF, NTO, LAX-112, or FOX-7), one or more metals/semimetals (including, but not limited to Mg, Ti, Si, B, Ta, Zr, Hf or Al) and one or more reactive cast-cured binders (such as glycidyl azide(GAP)/nitrate (PGN) polymers, polyethylene glycol, or perfluoropolyether derivatives with plasitisizers, such as GAP plastisizer, nitrate esters or liquid fluorocarbons). While Al is the primary metal of the disclosed compositions it is contemplated that it can be substituted with other similar metals/semimetals such as Mg, Ti, Si, B, Ta, Zr, and/or Hf. In some examples, Al is substituted with Si and/or B. Si is known to reduce the sensitivity of compositions compared to Al with nearly the same heat of combustion. It is contemplated that alloys and/or intermetallic mixtures of above metals/semimetals can also be utilized. It is further contemplated that particle sizes of the metal/semi-metal additives can range from 30 nm to 40 μm, such as from 34 nm to 40 μm, 100 nm to 30 μm, 1 μm to 40 μm, or 20 μm to 35 μm. In some examples, particle sizes of the metal/semi-metal additives are at least 30 nm, at least 40 nm, at least 50 nm, at least 100 nm, at least 150 nm, at least 200 nm, at least 300 nm, at least 400 nm, at least 500 nm, at least 600 nm, at least 700 nm, at least 800 nm, at least 900 nm, at least 1 μm, at least 5 μm, at least 10 μm, at least 20 μm, at least 30 μm, including 30 nm, 40 nm, 50 nm, 100 nm, 150 nm, 200 nm, 300 nm, 400 nm, 500 nm, 600 nm, 700 nm, 800 nm, 900 nm, 1 μm, 2 μm, 3 μm, 4 μm, 5 μm, 6 μm, 7 μm, 8 μm, 9 μm, 10 μm, 20 μm, 30 μm, 31 μm, 32 μm, 33 μm, 34 μm, 35 μm, 36 μm, 37 μm, 38 μm, 39 μm, or 40 μm. It is contemplated that the shape of particles may vary, such as atomized spheres, flakes or sponge morphologies. It is contemplated that the percent or combination of high-performance explosives, insensitive explosives, metals/semimetals and/or reactive cast-cured binders may vary depending upon the properties desired.

In some examples, a disclosed formulation includes about 50% to about 90% high-performance explosives, such as about 60% to about 80%, including 50%, 51%, 52%, 53%, 54%, 55%, 56%, 57%, 58%, 59%, 60%, 61%, 62%, 63%, 64%, 65%, 66%, 67%, 68%, 69%, 70%, 71%, 72%, 73%, 74%, 75%, 76%, 77%, 78%, 79%, 80%, 81%, 82%, 83%, 84%, 85%, 86%, 87%, 88%, 89%, or 90% high-performance explosives; about 0% to about 30% insensitive explosives, such as about 10% to about 20%, including 0%, 1%, 2%, 3%, 4%, 5%, 6%, 7%, 8%, 9%, 10%, 11%, 12%, 13%, 14%, 15%, 16%, 17%, 18%, 19%, 20%, 21%, 22%, 23%, 24%, 25%, 26%, 27%, 28%, 29%, or 30% insensitive explosives; about 5% to about 30% metals or

semimetals, such as about 10% to about 20%, including 5%, 6%, 7%, 8%, 9%, 10%, 11%, 12%, 13%, 14%, 15%, 16%, 17%, 18%, 19%, 20%, 21%, 22%, 23%, 24%, 25%, 26%, 27%, 28%, 29%, or 30% metals/semimetals; and about 5% to about 30% reactive cast-cured binders, such as about 10% to about 20%, including 5%, 6%, 7%, 8%, 9%, 10%, 11%, 12%, 13%, 14%, 15%, 16%, 17%, 18%, 19%, 20%, 21%, 22%, 23%, 24%, 25%, 26%, 27%, 28%, 29%, or 30% reactive cast-cured binders.

In some examples, a disclosed formulation includes about 50% to about 90% HMX, TNAZ, RDX and/or CL-20, such as about 60% to about 80%, including 50%, 51%, 52%, 53%, 54%, 55%, 56%, 57%, 58%, 59%, 60%, 61%, 62%, 63%, 64%, 65%, 66%, 67%, 68%, 69%, 70%, 71%, 72%, 73%, 74%, 75%, 76%, 77%, 78%, 79%, 80%, 81%, 82%, 83%, 84%, 85%, 86%, 87%, 88%, 89%, or 90% HMX, TNAZ, RDX and/or CL-20; about 0% to about 30% TATB, DAAF, NTO, LAX-112, and/or FOX-7, such as about 10% to about 20%, including 0%, 1%, 2%, 3%, 4%, 5%, 6%, 7%, 8%, 9%, 10%, 11%, 12%, 13%, 14%, 15%, 16%, 17%, 18%, 19%, 20%, 21%, 22%, 23%, 24%, 25%, 26%, 27%, 28%, 29%, or 30% TATB, DAAF, NTO, LAX-112, and/or FOX-7; about 5% to about 30% Mg, Ti, Si, B, Ta, Zr, Hf and/or Al, such as about 10% to about 20%, including 5%, 6%, 7%, 8%, 9%, 10%, 11%, 12%, 13%, 14%, 15%, 16%, 17%, 18%, 19%, 20%, 21%, 22%, 23%, 24%, 25%, 26%, 27%, 28%, 29%, or 30% Mg, Ti, Si, B, Ta, Zr, Hf and/or Al; and about 5% to about 30% glycidyl azide(GAP)/nitrate (PGN) polymers, polyethylene glycol, and perfluoropolyether derivatives with plasitisizers, such as GAP plastisizer, nitrate esters or liquid fluorocarbons, such as about 10% to about 20%, including 5%, 6%, 7%, 8%, 9%, 10%, 11%, 12%, 13%, 14%, 15%, 16%, 17%, 18%, 19%, 20%, 21%, 22%, 23%, 24%, 25%, 26%, 27%, 28%, 29%, or 30% glycidyl azide(GAP)/nitrate (PGN) polymers, polyethylene glycol, and perfluoropolyether derivatives with plasitisizers, such as GAP plastisizer, nitrate esters or liquid fluorocarbons.

In some examples, a disclosed formulation includes about 50% to about 90% HMX, such as about 60% to about 80%, including 50%, 51%, 52%, 53%, 54%, 55%, 56%, 57%, 58%, 59%, 60%, 61%, 62%, 63%, 64%, 65%, 66%, 67%, 68%, 69%, 70%, 71%, 72%, 73%, 74%, 75%, 76%, 77%, 78%, 79%, 80%, 81%, 82%, 83%, 84%, 85%, 86%, 87%, 88%, 89%, or 90% HMX; about 0% to about 30% Al, such as about 10% to about 20%, including 0%, 1%, 2%, 3%, 4%, 5%, 6%, 7%, 8%, 9%, 10%, 11%, 12%, 13%, 14%, 15%, 16%, 17%, 18%, 19%, 20%, 21%, 22%, 23%, 24%, 25%, 26%, 27%, 28%, 29%, or 30% Al (with a particle size ranging from 30 nm to 40 μm, such as from 34 nm to 40 μm, 100 nm to 30 μm, 1 μm to 40 μm, or 20 μm to 35 μm. In some examples, particle sizes of the metal/semi-metal additives are at least 30 nm, at least 40 nm, at least 50 nm, at least 100 nm, at least 150 nm, at least 200 nm, at least 300 nm, at least 400 nm, at least 500 nm, at least 600 nm, at least 700 nm, at least 800 nm, at least 900 nm,

at least 1 μm, at least 5 μm, at least 10 μm, at least 20 μm, at least 30 μm, including 30 nm, 40 nm, 50 nm, 100 nm, 150 nm, 200 nm, 300 nm, 400 nm, 500 nm, 600 nm, 700 nm, 800 nm, 900 nm, 1 μm, 2 μm, 3 μm, 4 μm, 5 μm, 6 μm, 7 μm, 8 μm, 9 μm, 10 μm, 11 μm , 12 μm, 13 μm, 14 μm, 15 μm, 16 μm, 17 μm, 18 μm, 19 μm, 20 μm, 30 μm, 31 μm, 32 μm, 33 μm, 34 μm, 35 μm, 36 μm, 37 μm, 38 μm, 39 μm, or 40 μm); about 5% to about 15% glycidal azide polymer, such as about 7.5% to about 10%, including 5%, 6%, 7%, 8%, 9%, 10%, 11%, 12%, 13%, 14%, or 15% glycidal azide polymer; about 5% to about 15% Fomblin Fluorolink D, such as about 7.5% to about 10%, including 5%, 6%, 7%, 8%, 9%, 10%, 11%, 12%, 13%, 14%, or 15% Fomblin Fluorolink D; and about 0% to about 5% methylene diphenyl diisocyanate, such as about 2% to about 4%, including 1%, 2%, 3%, 4%, or 5% methylene diphenyl diisocyanate.

In some examples, a disclosed composition includes at least a highly non-ideal HE is defined as an HE in which 30% to 40% or more of the meta-stably stored chemical energy is converted to HE hot products gases after the detonation front (shock front) in a deflagrating Taylor wave. In some examples, a disclosed composition does not include an ideal HE.

In some examples, a disclosed composition, such as a composition optimized for performance and thermal stability includes HMX, fluoropolymer and/or an energetic polymer (*e.g.*, GAP) and Al. In some examples, other optimized formulations for performance and thermal stability can replace HMX with RDX for reduced cost mixture that also contains a fluoropolymer and/or energetic polymer (*e.g.*, GAP) and Al.

In some examples, a disclosed composition includes 69% HMX, 15% 3.5 μm atomized Al, 7.5% glycidal azide polymer, 7.5% Fomblin Fluorolink D and 1% methylene diphenyl diisocyanate (having an mechanical energy of 12.5 kJ/cc at TMD).

In some examples, an inert surrogate is substituted for Al. In some examples, lithium fluoride (LiF) is one such material that may be substituted in certain formulations as an inert surrogate for Al. Other compounds which have a similar density, molecular weight and very low heat of formation so that it can be considered inert even in extreme circumstances may be substituted for Al. It is contemplated that the percentage of Al to the inert surrogate may range from about 10% Al to about 90% inert surrogate to about 90% Al and 10% inert surrogate. Such compositions may be used to develop models for metal reactions that extend beyond the current temperature and pressures in existing models.

EXAMPLES

The following examples are provided to illustrate certain particular features and/or embodiments. These examples should not be construed to limit the disclosure to the particular features or embodiments described.

Example 1

Explosive Compositions

This example discloses explosive compositions which can be used for multiple purposes, including fracturing.

Background: Explosive regimes can be divided into three basic temporal stages: reaction in the CJ plane (very prompt reaction in the detonation, ns-μs), reaction in the post-detonation early expansion phase (4-10 μs) and late reaction to contribute to blast effects (1-100's of ms). Work on mixtures of TNT and Al (tritonals) began as early as 1914 and by WWII, where U.S. and British researchers discovered great effects in the third temporal regime of blast and no effects or detrimental effect to the prompt detonation regime. Because of a lack of acceleration in detonation wave speed, it is a commonly held belief in the energetics community that there is no Al participation at the C-J plane. However, some work has demonstrated that replacement of Al with an inert surrogate (NaCl) actually increased detonation velocity as compared to active Al, much more even than endothermic phase change could account for, therefore it was postulated that the Al *does* react in the C-J plane, however it is kinetically limited to endothermic reactions. In contrast, later work did not see as significant a difference in detonation velocity when Al was substituted for an inert surrogate (LiF) in TNT/RDX admixtures. However, this work showed a 55% increase in cylinder wall velocity for late-time expansion for the active Al versus surrogate, with Al contribution roughly 4 μs after the passage of the C-J plane.

Modern high performance munitions applications typically contain explosives, such as PBXN-14 or PBX9501, designed to provide short-lived high-pressure pulses for prompt structural damage or metal pushing. Another class of explosives, however, includes those that are designed for longer-lived blast output (enhanced blast) via late-time metal-air or metal detonation-product reactions. An example of an enhanced blast explosive, PBXN-109, contains only 64% RDX (cyclotrimethylenetrinitramine), and includes Al particles as a fuel, bound by 16% rubbery polymeric binder. The low % RDX results in diminished detonation performance, but later time Al/binder burning produces increased air blast. Almost in a separate class, are "thermobaric" type explosives, in which the metal loading can range from 30% to even as high as 90%. These explosives are different from the materials required for the present disclosure, as with such high metal loading, they are far from stoichiometric in terms of metal oxidation with detonation products, and additionally detonation temperature and pressure are considerably lower, which also effect metal oxidation rates. Therefore, such materials are well suited for late-time blast and thermal effects, but not for energy release in the Taylor expansion wave.

Formulations combining the favorable initial work output from the early pressure profile of a detonation wave with late-time burning or blast are exceedingly rare and rely on specific ratios of metal to explosive as well as metal type/morphology and binder type. It has been demonstrated that both high metal pushing capability *and* high blast ability are achieved in *pressed* formulations by combining small size Al particles, conventional high explosive crystals, and reactive polymer binders. This combination is believed to be effective because the small particles of Al enhance the kinetic rates associated with diffusion-controlled chemistry, but furthermore, the ratio of Al to explosive was found to be of the utmost importance. It was empirically discovered that at levels of 20 wt% Al, the metal reactions did not contribute to cylinder wall velocity. This result is not only counterintuitive, but also is an indication that for metal acceleration applications, the bulk of current explosives containing Al are far from optimal. To fully optimize this type of combined effects explosive, a system in which the binder is all energetic/reactive, or completely replaced with a high performance explosive is needed. Furthermore, very little is understood about the reaction of Si and B in post-detonation environments.

Measurements: In order to interrogate the interplay between prompt chemical reactions and Al combustion in the temporal reactive structure, as depicted in FIG. R, various measurement techniques are applied. *Quantitative* measurements in the microsecond time regime at high temperatures and pressures to determine the extent of metal reactions are challenging, and have been mostly unexplored to date. Techniques such as emission spectroscopy have been applied with success for observation of late-time metal oxidation, but the physiochemical environment and sub-microsecond time regime of interest in this study renders these techniques impractical. However, using a number of advanced techniques in Weapons Experiment Division, such as photon doppler velocimetry (PDV) and novel blast measurements, the initiation and detonation/burning responses of these new materials are probed. Predictions of the heats of reaction and detonation characteristics using modern thermochemical codes are used to guide the formulations and comparisons of theoretical values versus measured can give accurate estimations of the kinetics of the metal reactions. From measurement of the acceleration profile of metals with the explosives product gases, the pressure-volume relationship on an isentrope can be fit and is represented in the general form in equation 1, represented as a sum of functions over a range of pressures, one form being the JWL, equation 2.

$$P_S = \sum \phi_i(v) \qquad \text{(eq 1)}$$

$$P_S = Ae^{-R_1V} + Be^{-R_2V} + CV^{-(\omega+1)} \quad \text{(eq 2)}$$

In the JWL EOS, the terms A, B, C, R_1, R_2 and ω are all constants that are calibrated, and V = v/v_o (which is modeled using hydrocodes). With thermochemically predicted EOS parameters, and the calibrated EOS from tested measurements, both the extent and the timing of metal reactions is accurately be accessed, and utilized for both optimization of formulations as well as in munitions design. The time-scale of this indirect observation of metal reactions dramatically exceeds what is possible from that of direct measurements, such as spectroscopic techniques. The formulations are then optimized by varying the amount, type and particle sizes of metals to both enhance the reaction kinetics, as well as tailor the time regime of energy output. Traditional or miniature versions of cylinder expansion tests are applied to test down selected formulations. Coupled with novel blast measurement techniques, the proposed testing will provide a quantitative, thorough understanding of metal reactions in PAX and cast-cured explosives to provide combined effects with a number of potential applications.

Formulation: Chemical formulations are developed to optimize for cylinder energy. Such formulations are developed to provide different chemical environments as well as variation in temperature and pressure. Chemical formulations may include high-performance explosives (for example but not limited to HMX, TNAZ, RDX CL-20), insensitive explosives (TATB, DAAF, NTO, LAX-112, FOX-7), metals/semimetals (Al, Si or B) and reactive cast-cured binders (such as glycidyl azide(GAP)/nitrate (PGN) polymers, polyethylene glycol, and perfluoropolyether derivatives with plasitisizers such as GAP plastisizer, nitrate esters or liquid fluorocarbons). While Al is the primary metal of the disclosed compositions it is contemplated that it can be substituted with Si and/or B. Si is known to reduce the sensitivity of formulations compared to Al with nearly the same heat of combustion.

In order to verify thermoequlibrium calculations at a theoretical state or zero Al reaction, an inert surrogate for Al is identified. Lithium fluoride (LiF) is one such material that may be substituted in certain formulations as an inert surrogate for Al. The density of LiF is a very close density match for Al (2.64 gcm^{-3} for LiF vs 2.70 gcm^{-3} for Al), the molecular weight, 25.94 $gmol^{-1}$, is very close to that of Al, 26.98 $gmol^{-1}$, and it has a very low heat of formation so that it can be considered inert even in extreme circumstances. Because of these properties, LiF is believed to give formulations with near identical densities, particle size distributions, product gas molecular weights and yet give inert character in the EOS measurements. Initial formulations are produced with 50% and 100% LiF replacing Al. An understanding of reaction rates in these environments are used to develop models for metal reactions that extend beyond the current temperature and pressures in existing models.

Resulting material may be cast-cured, reducing cost and eliminating the infrastructure required for either pressing or melt-casting.

Particular Explosive Formulation

In one particular example, an explosive formulation was generated with an energy density being greater than or equal to 12 kJ/cc at theoretical maximum density, the time scale of the energy release being in two periods of the detonation phase with a large amount, greater than 30%, being in the Taylor expansion wave and the produced explosive being a high density cast-cured formulation. A formulation was developed and tested, which contained 69% HMX, 15% 3.5 μm atomized Al, 7.5% glycidal azide polymer, 7.5% Fomblin Fluorolink D and 1% methylene diphenyl diisocyanate (having an mechanical energy of 12.5 kJ/cc at TMD).

FIG. 23 provides a graphic depiction of a detonation structure of an explosive containing Al reacted or unreacted following flow-Taylor wave. Total mechanical energy in the formulation was equal to or greater than 12 kJ/cc. Greater than 30% of the energy was released in the following flow Taylor Wave of the explosive reaction due to reaction of Al (or other metals or semi-metals such as but not limited to Mg, Ti, Si, B, Ta, Zr, Hf). In the demonstrated explosive, 30-40% of energy was released in the Taylor Wave portion of the reaction. Other similar formulations similar to the above, but with a HTBP based non-reactive binder, failed to show early Al reaction in expansion. Further, formulations with nitrate ester plastisizers and added oxidizer failed to pass required sensitivity tests for safe handling.

Example 2

Use of a non-ideal high explosive (HE) system to create fracturing in-situ within geologic formations

This example demonstrates the capability of the disclosed non-ideal HE system to be used to create fracturing in-situ within geologic formations.

Experimental/theoretical characterization of the non-ideal HE system was accomplished. The conceptual approach developed to the explosive stimulation of a nominal reservoir began with a pair of explosive charges in the wellbore separated by a distance determined by the properties of the explosive and the surrounding reservoir rock. The separation was the least required to assure that the initial outward going pressure pulse has developed a release wave (decaying pressure) behind was prior to the intersection of the two waves. The volume of material immediately behind the (nominally) circular locus of point where the intersecting waves just passed are loading in tension, favoring the fracture of the rock. The predicted result was a disc of fracture rock being generated out from the wellbore about midway between the charges. Numerical simulation supported this concept. FIG. 20 represents this result, as

discussed above. In the center, along the plane of symmetry, the predicted effect of the two wave interaction was seen, projecting damage significantly further radially. The dimensions on this figure are for a particular computational trial, modeling a typical tight gas reservoir rock and are not to be inferred as more than illustrative.

Numeric models to represent the non-ideal HE system were built. Potential target reservoirs were identified, together with existing geophysical characterization of the representative formations. Numerical models to represent these formations were implemented. Numerical simulations indicating potential rubblized regions produced by multiple precision detonation events were calculated. Initial production modeling was conducted. Initial simulations indicated a rubblized region extending 20-30 feet in radius from the borehole.

FIGS. 24 and 25 illustrate gas production by conventional fracture (solid lines) and rubblized zone (dashed lines) from 250' fractures with varying fracture conductivity or 3 cases of rubblized zones with radius of 20', 24' and 30'.

These studies demonstrate that the disclosed non-ideal HE system is a high energy density system which allows the zone affected by multiple timed detonation events to be extended by utilizing a "delayed" push in the energy in an environment of interacting shock/rarefaction waves. Moreover, the disclosed system allowed fracturing tight formations without hydraulically fracturing the formation.

X. Exemplary Multi-Stage Geologic Fracturing

Explosive fracturing methods, devices, and systems, as described above, can be used in combination with other fracturing means, such as hydraulic fracturing methods, devices and systems, or other fluid-based fracturing means. Any number of successive fracturing stages can be used. Such multi-stage fracturing can further enhance the resulting fracturing of a geologic formation relative to explosive fracturing alone. Any of the various explosive systems, devices, and related methods disclosed herein can be used in such a multi-stage fracturing method. Further, any known fluid-based fracturing systems, devices, and methods can be used in such a multi-stage fracturing method.

As illustrated in FIG. 34, in some methods an explosive system is initially introduced into a wellbore in a geologic formation and detonated to fracture at least a first portion of the geologic formation adjacent to the wellbore. Subsequently, a pressurized fluid is introduced into the wellbore to enhance the fracturing of the first portion of the geologic formation.

The explosive fracturing may result in destruction of at least part of the wellbore and/or obstruction of at least part of the wellbore with rubble. In such instances, the wellbore can be

redrilled after the detonation and prior to the introduction of a pressurized fluid to reform the wellbore and/or clear out rubble such that the introduced pressurized fluid is less obstructed.

Detonation of the explosive system in the wellbore can cause a fractured zone and/or rubblization zone in the geologic formation around the wellbore, as describe herein. Subsequently introduced pressurized fluid can travel through such fractured and/or rubblized zones and cause further fracturing and expansion of the radius of fracturing from the wellbore into the geologic formation, and/or otherwise increase the permeability of the geologic formation beyond that provided by explosive fracturing alone or hydraulic fracturing alone. Thus, the combination of explosive and hydraulic fracturing methods can provide synergistic results not possible otherwise.

In view of the many possible embodiments to which the principles disclosed herein may be applied, it should be recognized that illustrated embodiments are only examples and should not be considered a limitation on the scope of the disclosure. Rather, the scope of the disclosure is at least as broad as the scope of the following claims. We therefore claim all that comes within the scope of these claims.

We claim:

1. A method of fracturing a geologic formation, comprising:

introducing an explosive system into a wellbore in a geologic formation;

detonating the explosive system in the wellbore to fracture at least a first portion of the geologic formation adjacent to the wellbore; and

introducing pressurized fluid into the wellbore to enhance the fracturing of the first portion of the geologic formation.

2. The method of claim 1, further comprising redrilling the wellbore after detonating the explosive system in the wellbore and before introducing the pressurized fluid into the wellbore.

3. The method of claim 1, wherein introducing an explosive system into the wellbore comprises inserting an assembly of plural spaced apart explosive units, propellant units, or both explosive units and propellant units, into the wellbore.

4. The method of claim 3, wherein the detonation comprises creating a plurality of fractures in the first portion of the geologic formation and wherein the introduction of pressurized fluid into the wellbore comprises causing the pressurized fluid to enter into at least some of the plurality of fractures caused by the detonation and thereby increase the size, aperture, or extent of the fractures.

5. The method of claim 1, wherein the detonation causes a rubblization zone around the wellbore and the pressurized fluid flows into the rubblization zone and causes increased permeability of the geologic formation adjacent to the rubblization zone.

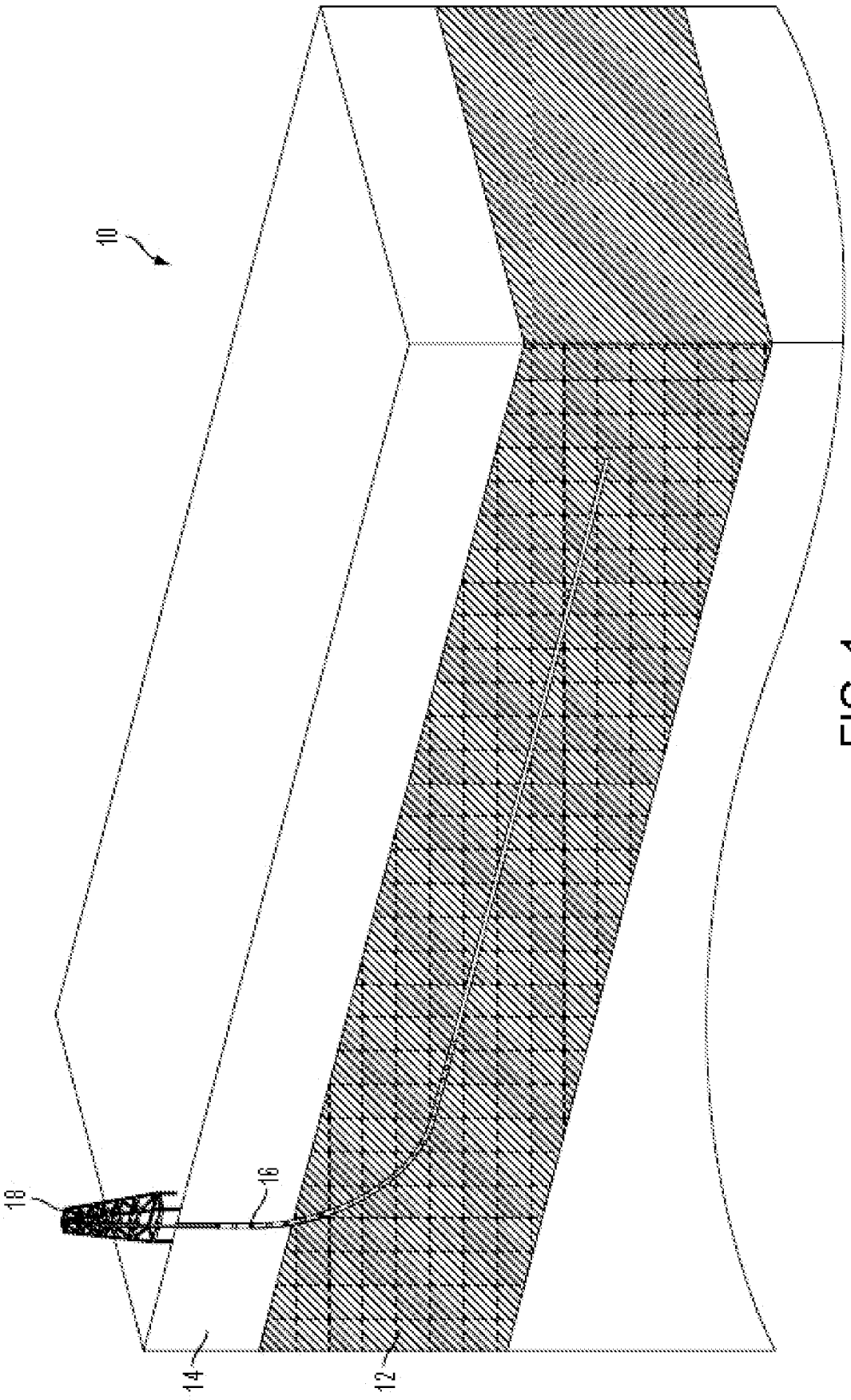

FIG. 1

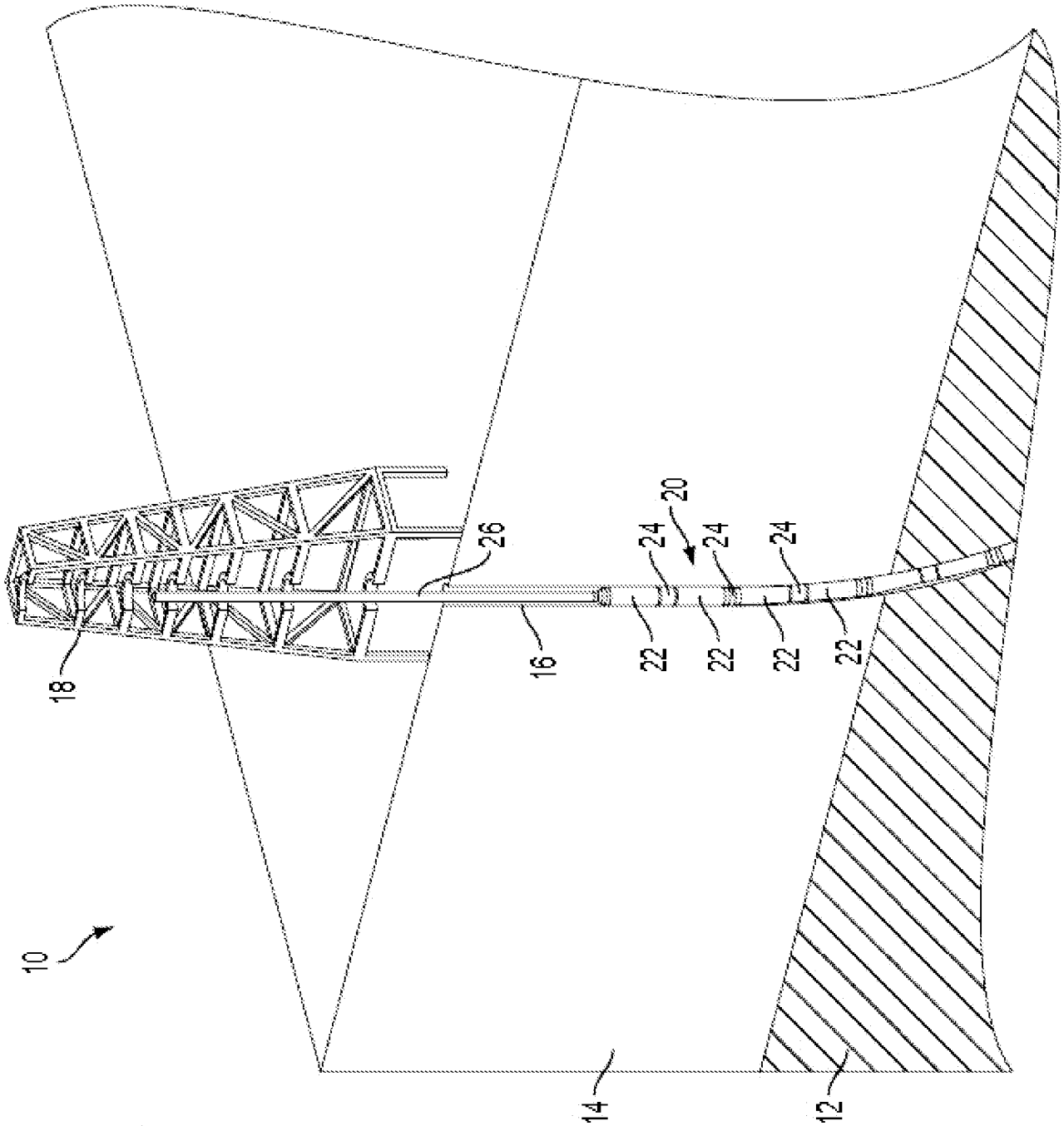

FIG. 2

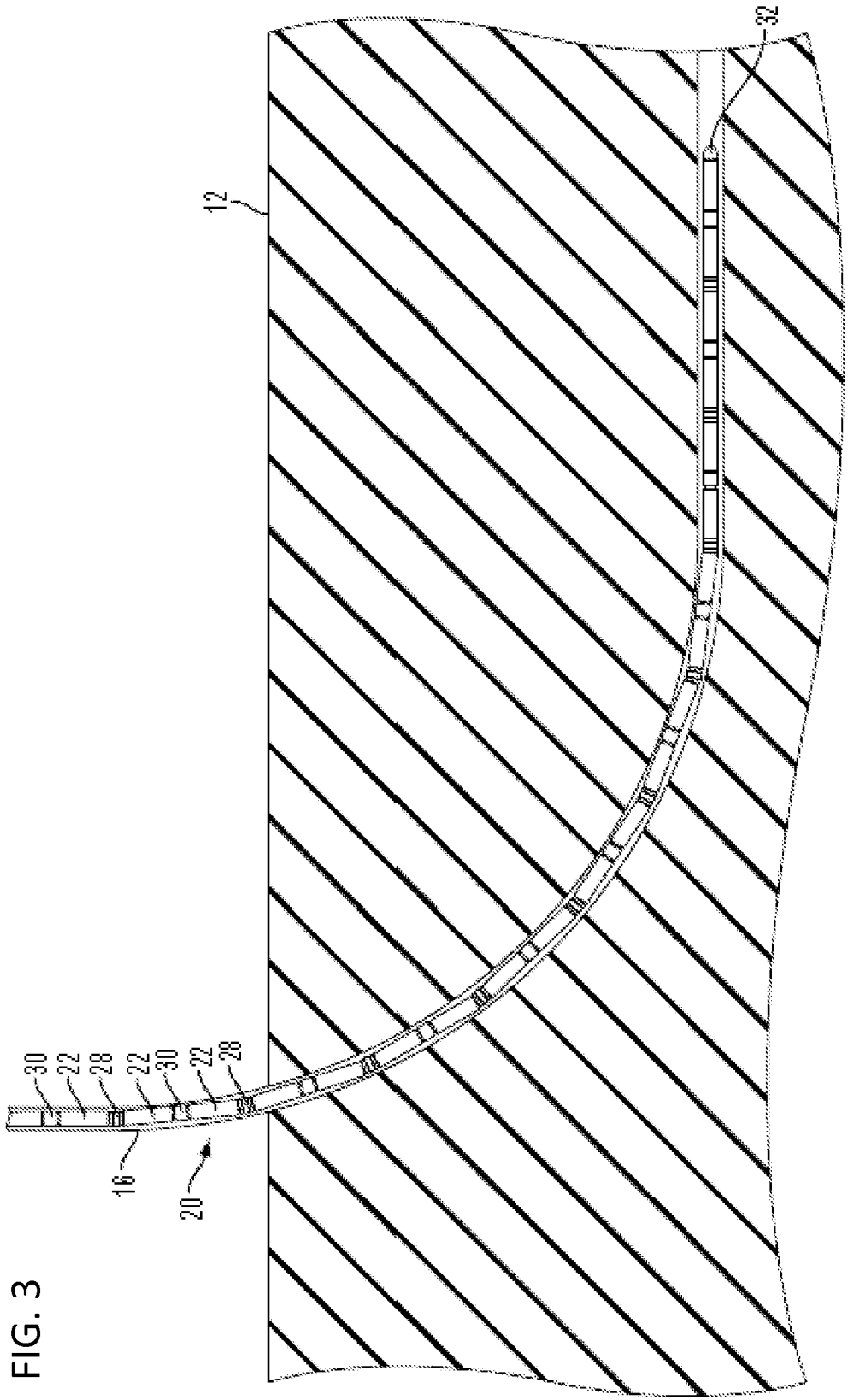

FIG. 3

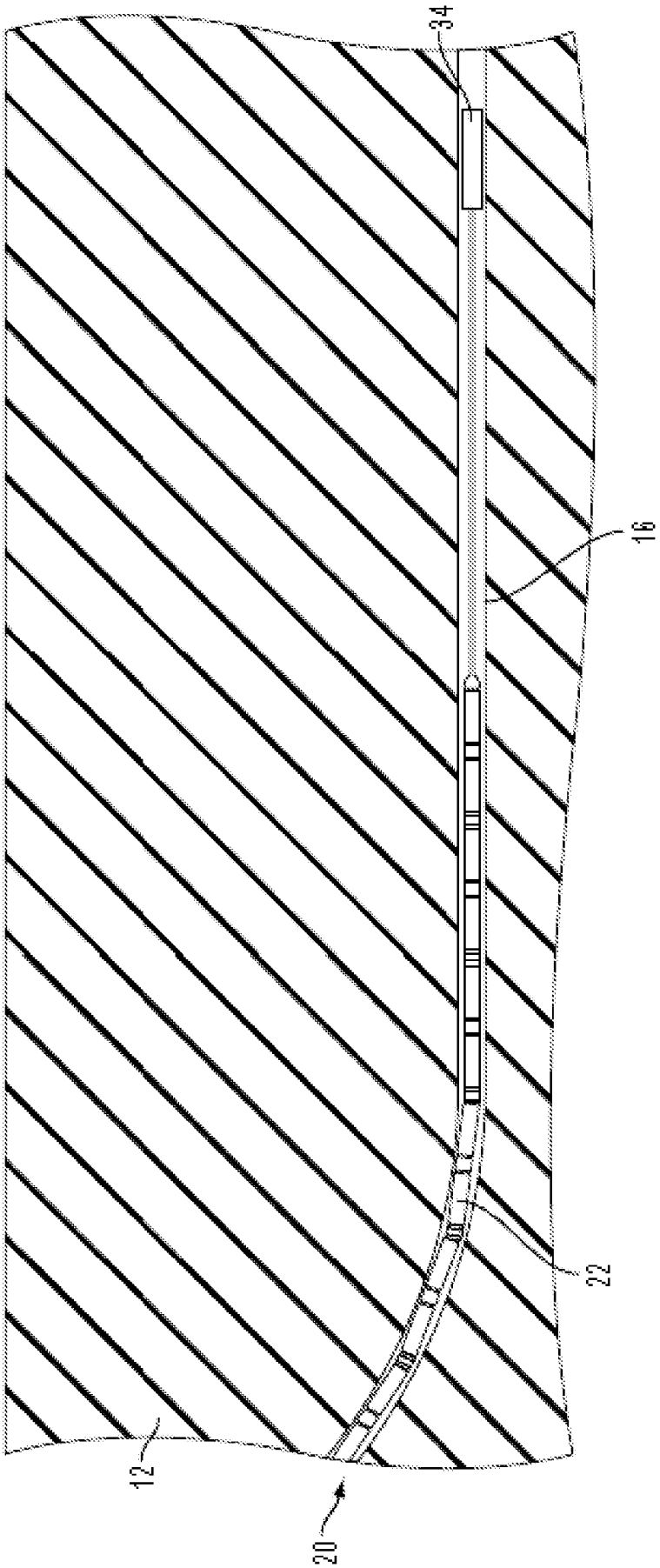

FIG. 4

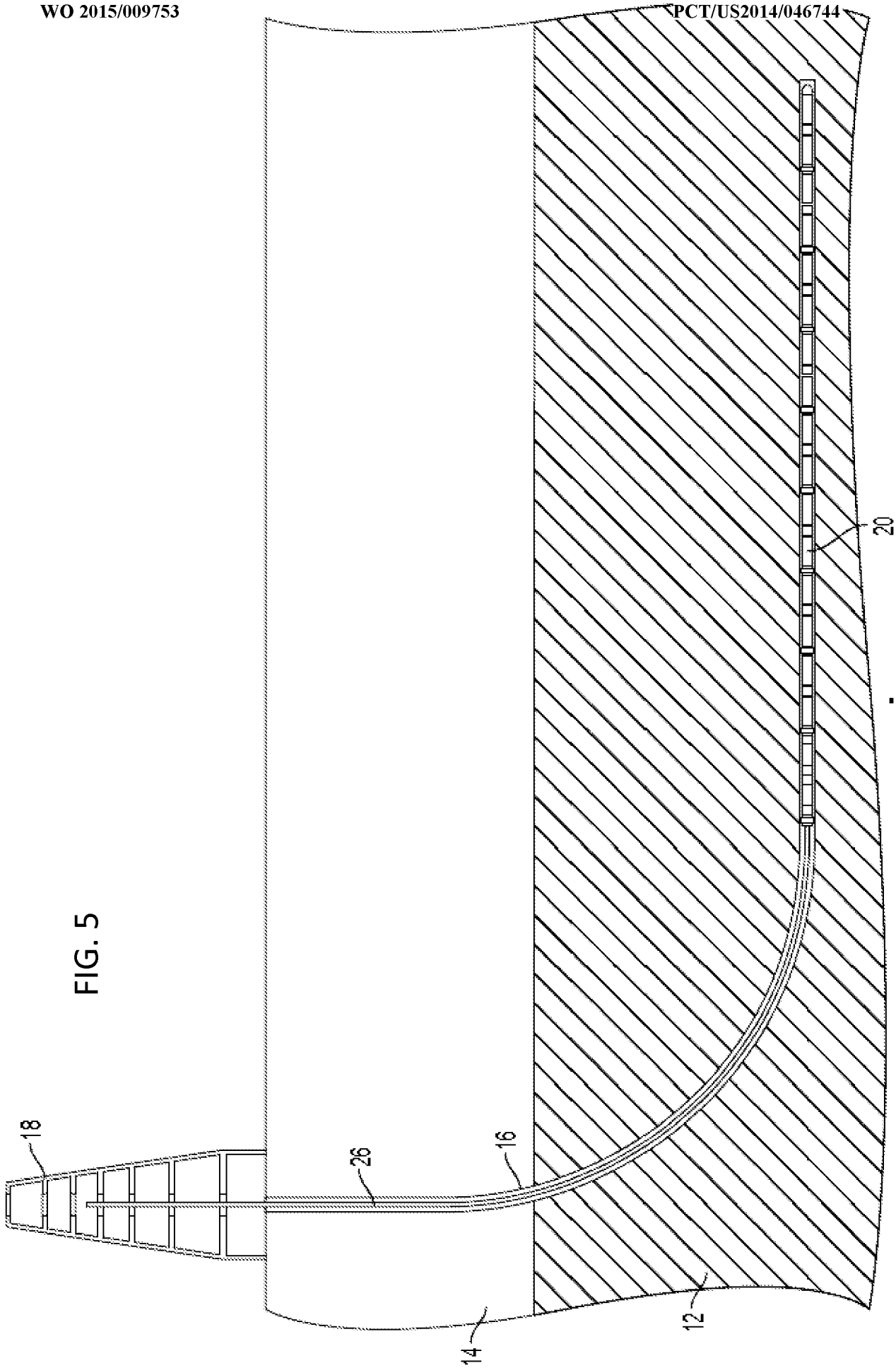

FIG. 5

FIG. 6

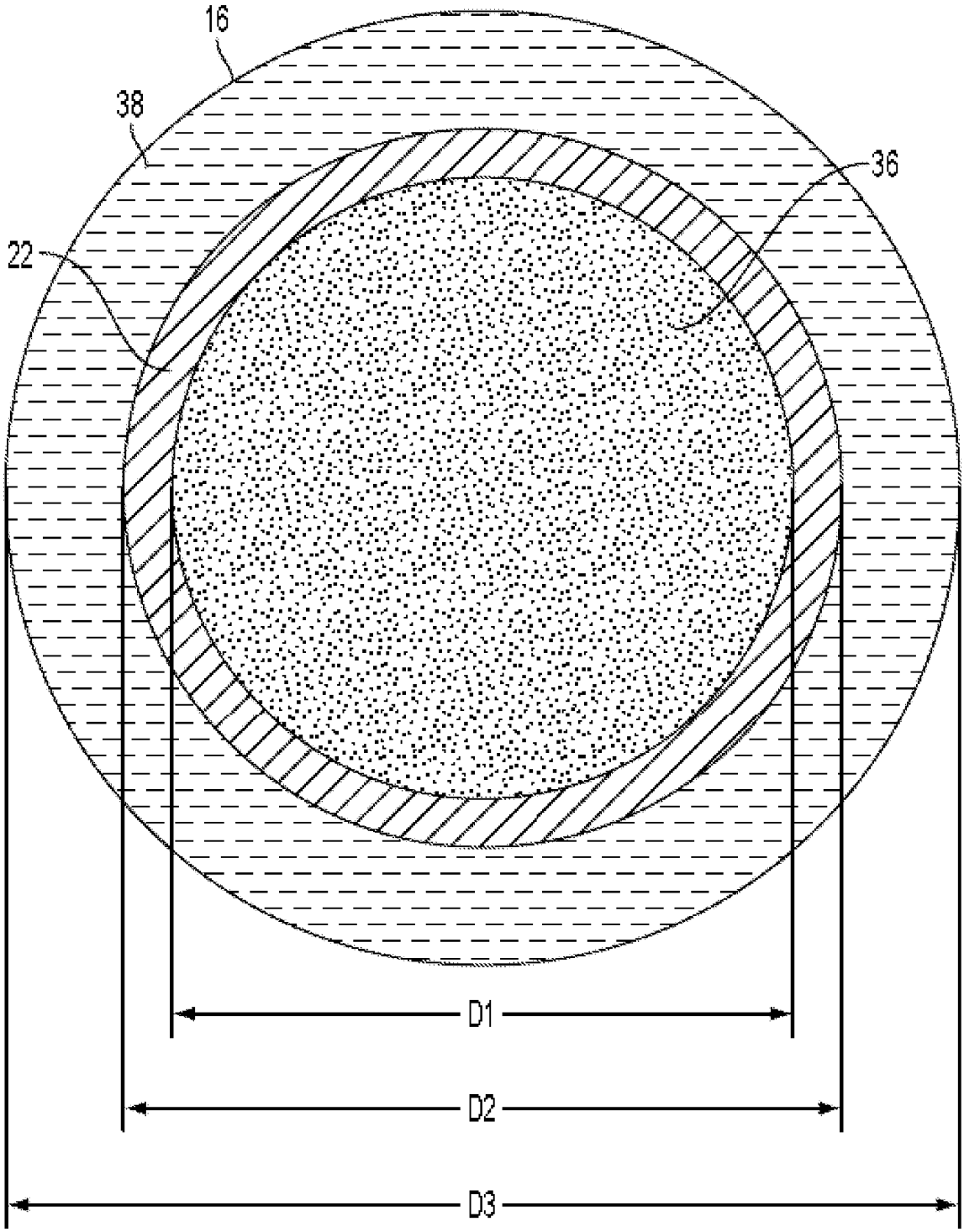

FIG. 7

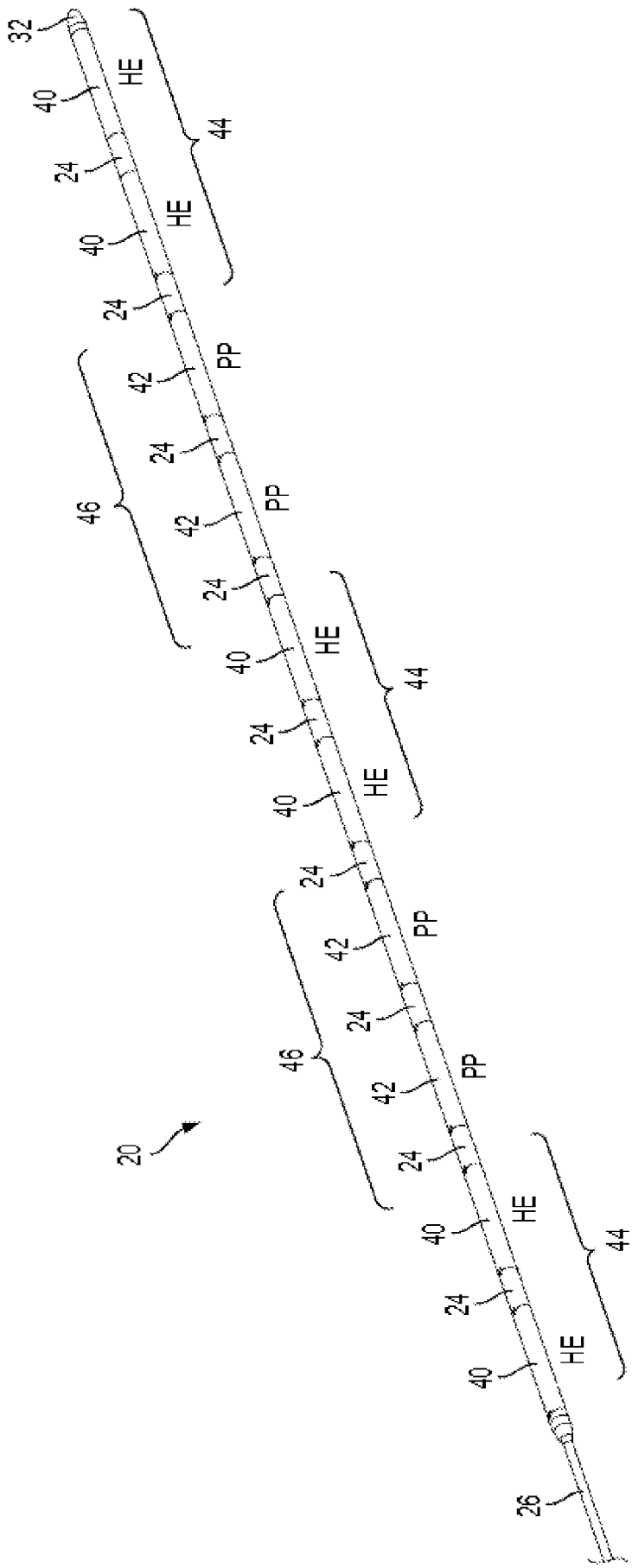
32
40
24
40
24
42
24
42
24
40
24
40
24
42
24
42
24
40
24
40
26
20
HE
HE
PP
PP
HE
HE
PP
PP
HE
HE
44
46
44
46
44

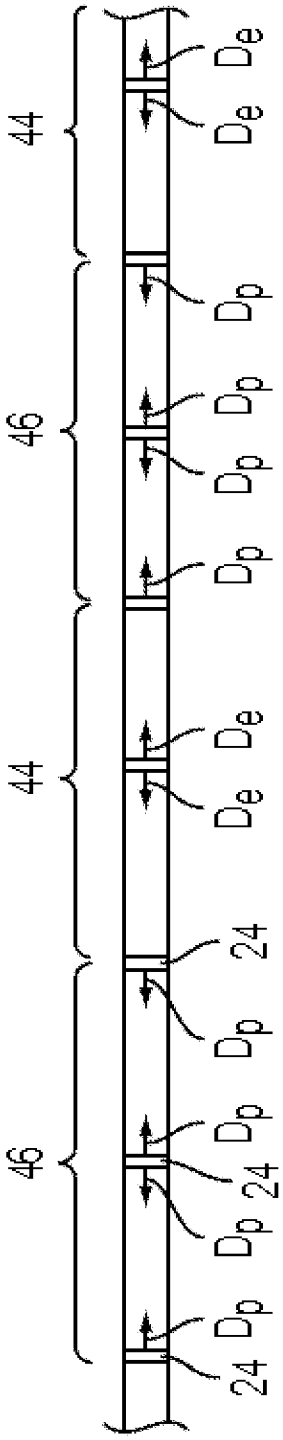

FIG. 8A

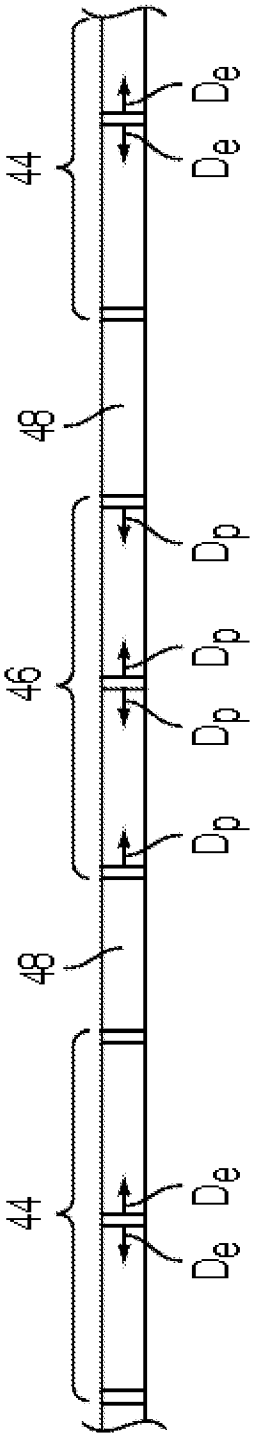

FIG. 8B

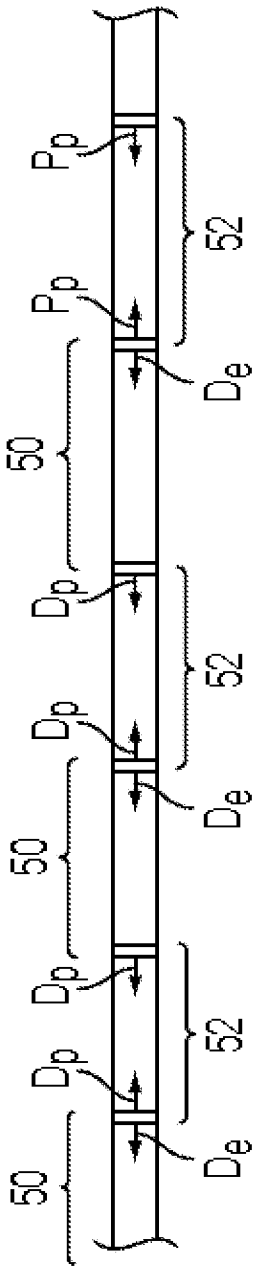

FIG. 8C

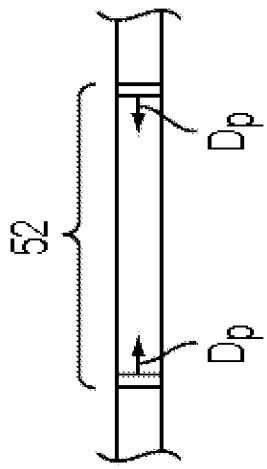

FIG. 8D

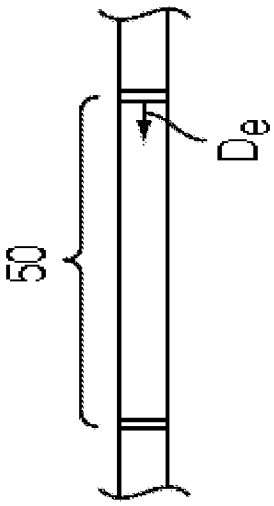

FIG. 8E

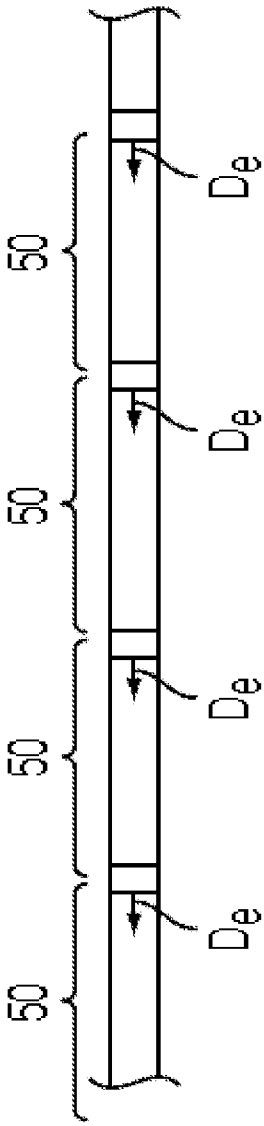

FIG. 8F

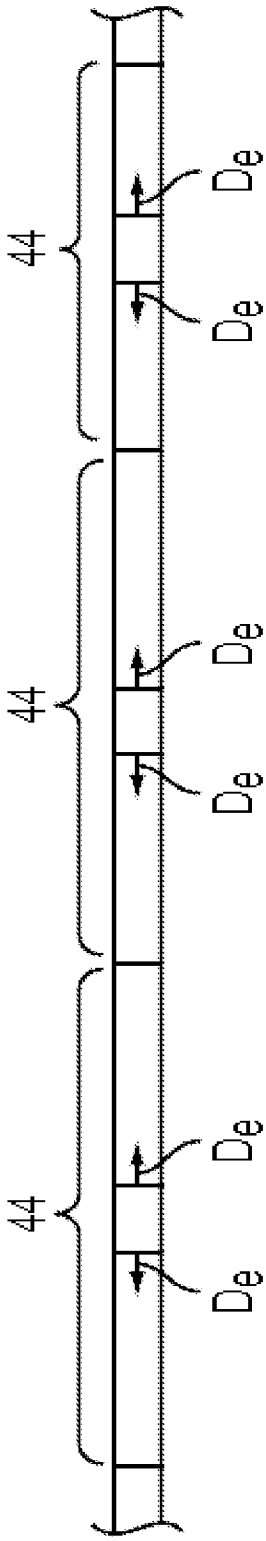

FIG. 8G

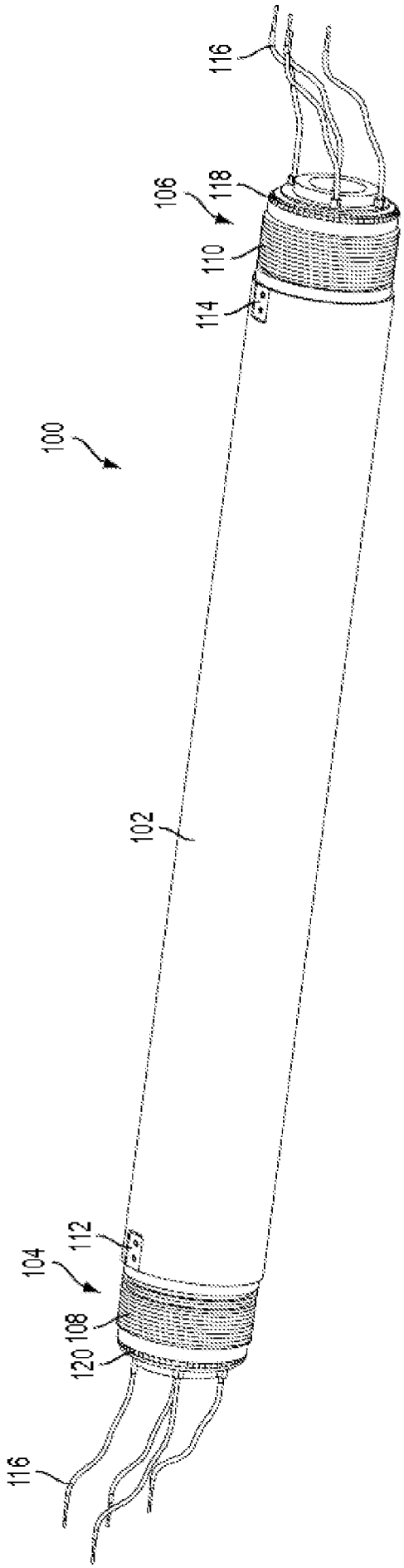

FIG. 9

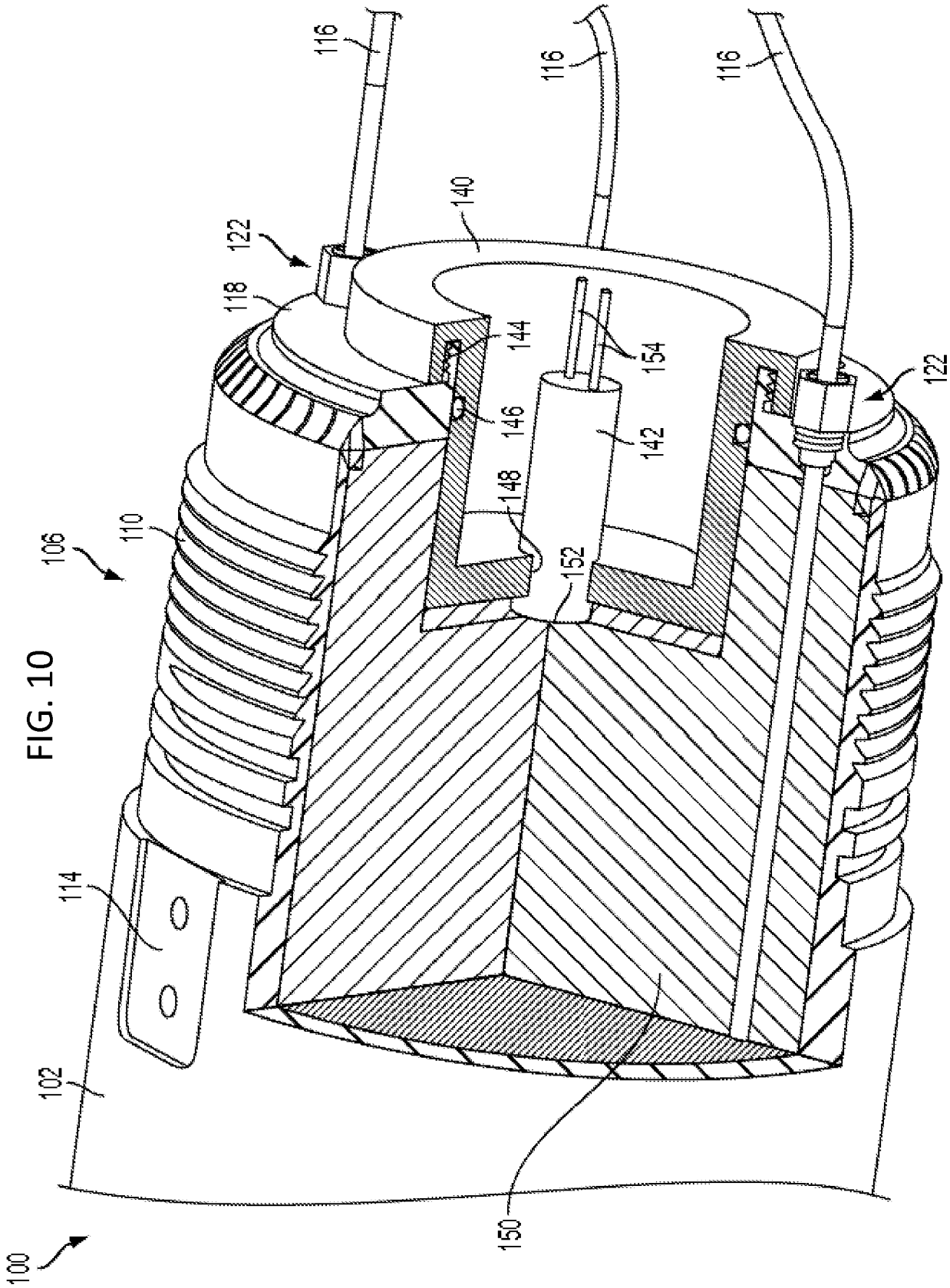
100
102
114
106
110
118
122
116
116
116
140
144
146
148
152
150
154
142
122

FIG. 10

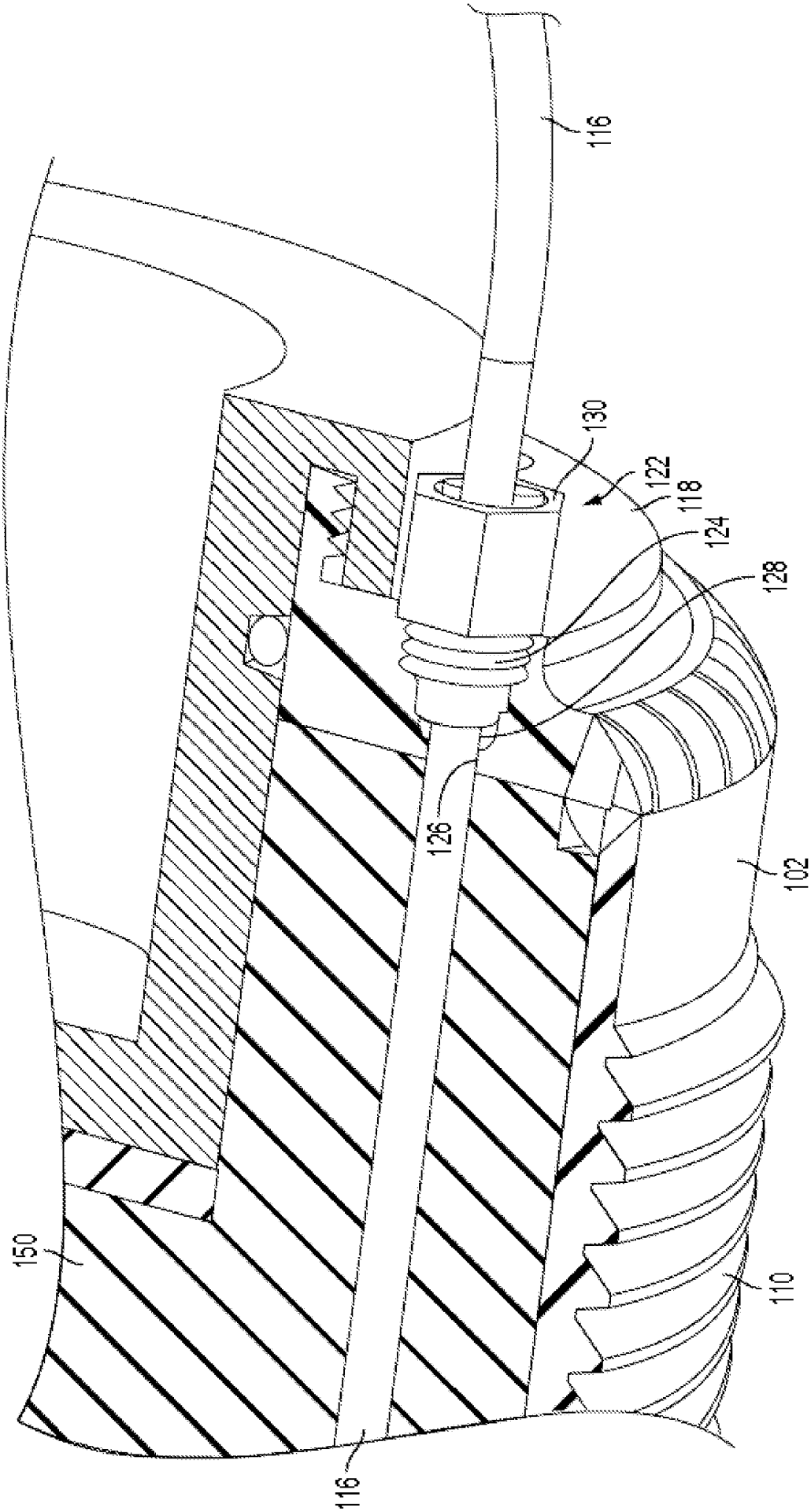

FIG. 11

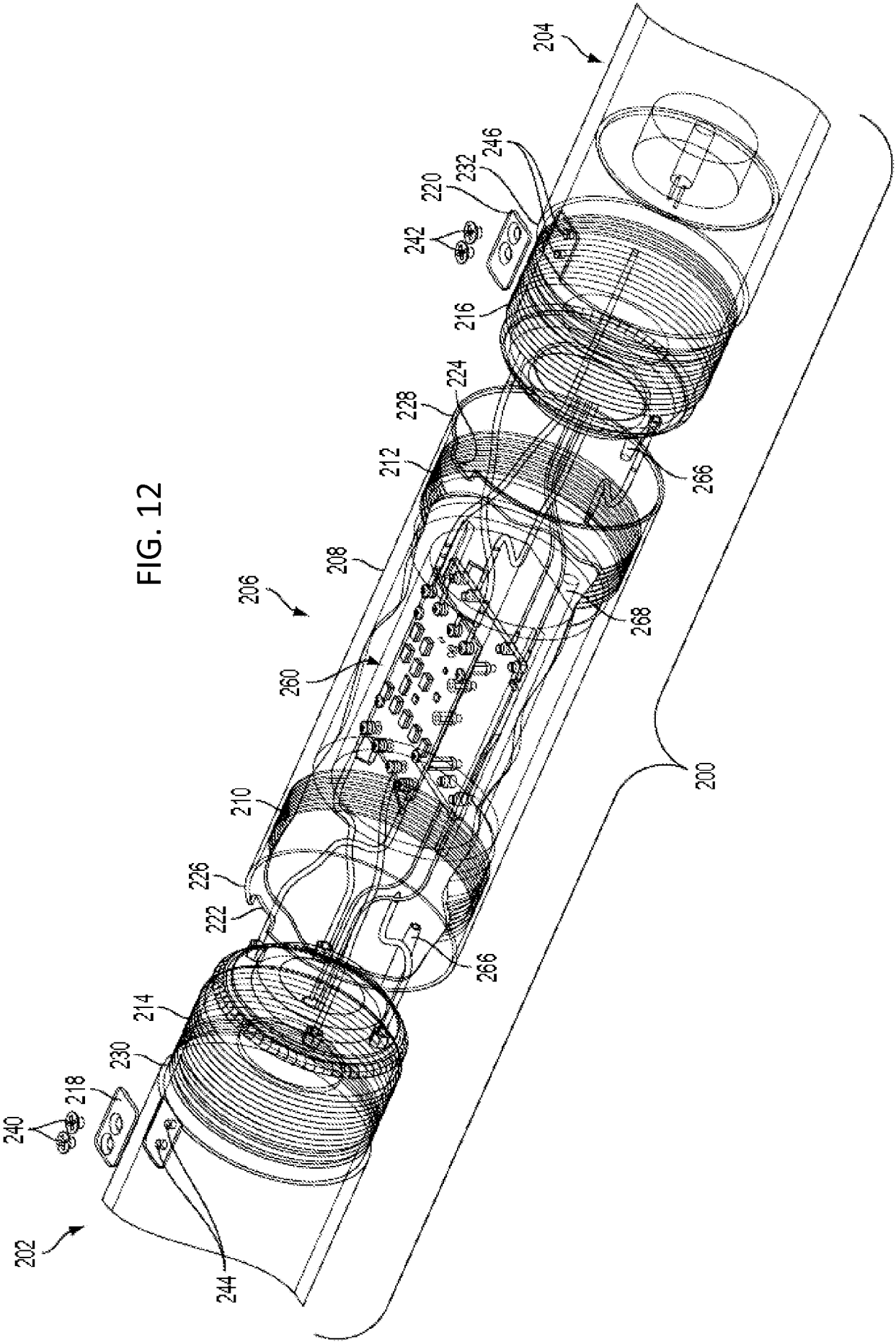
204
246
232
220
242
216
224
228
212
266
208
206
268
260
200
210
226
222
266
214
230
218
240
202
244

FIG. 12

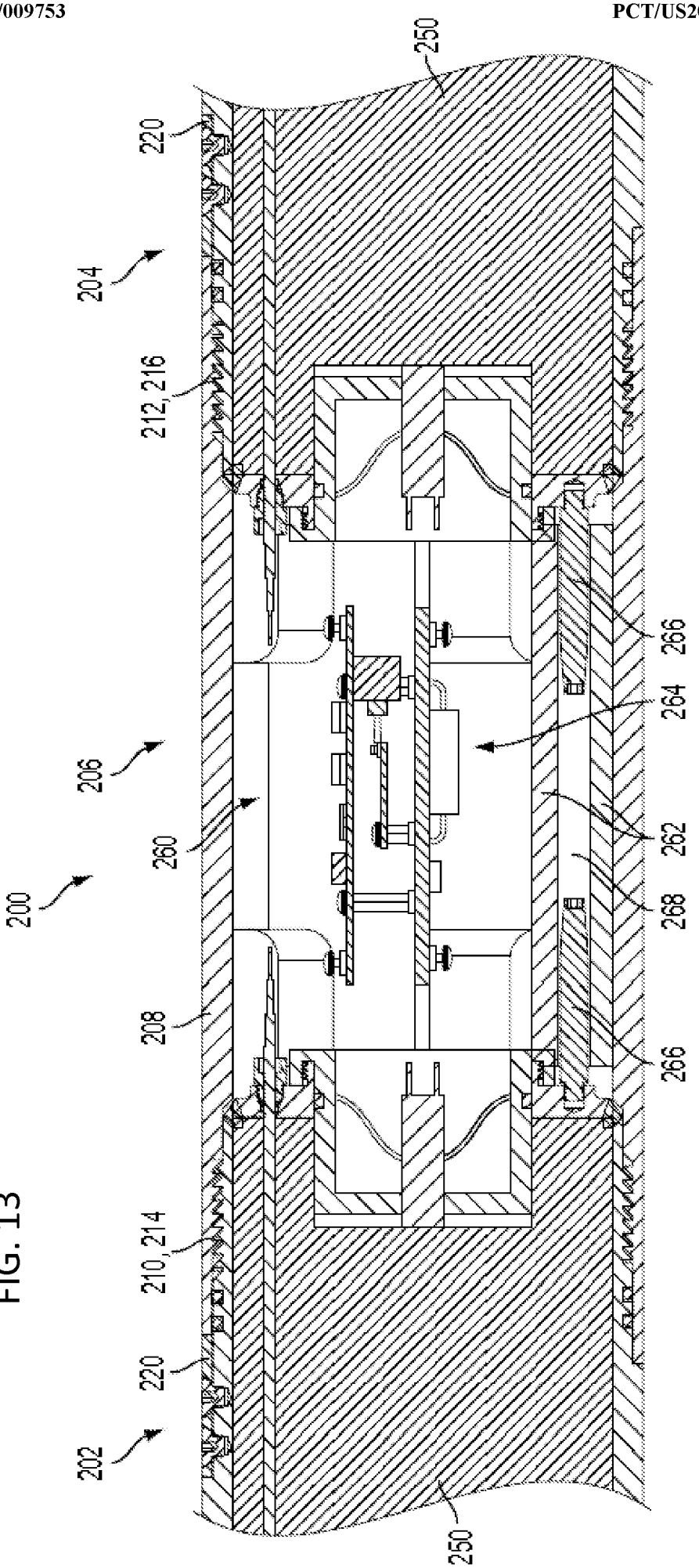
250
220
204
212, 216
206
200
260
208
210, 214
220
202
250
266
264
262
268
266

FIG. 13

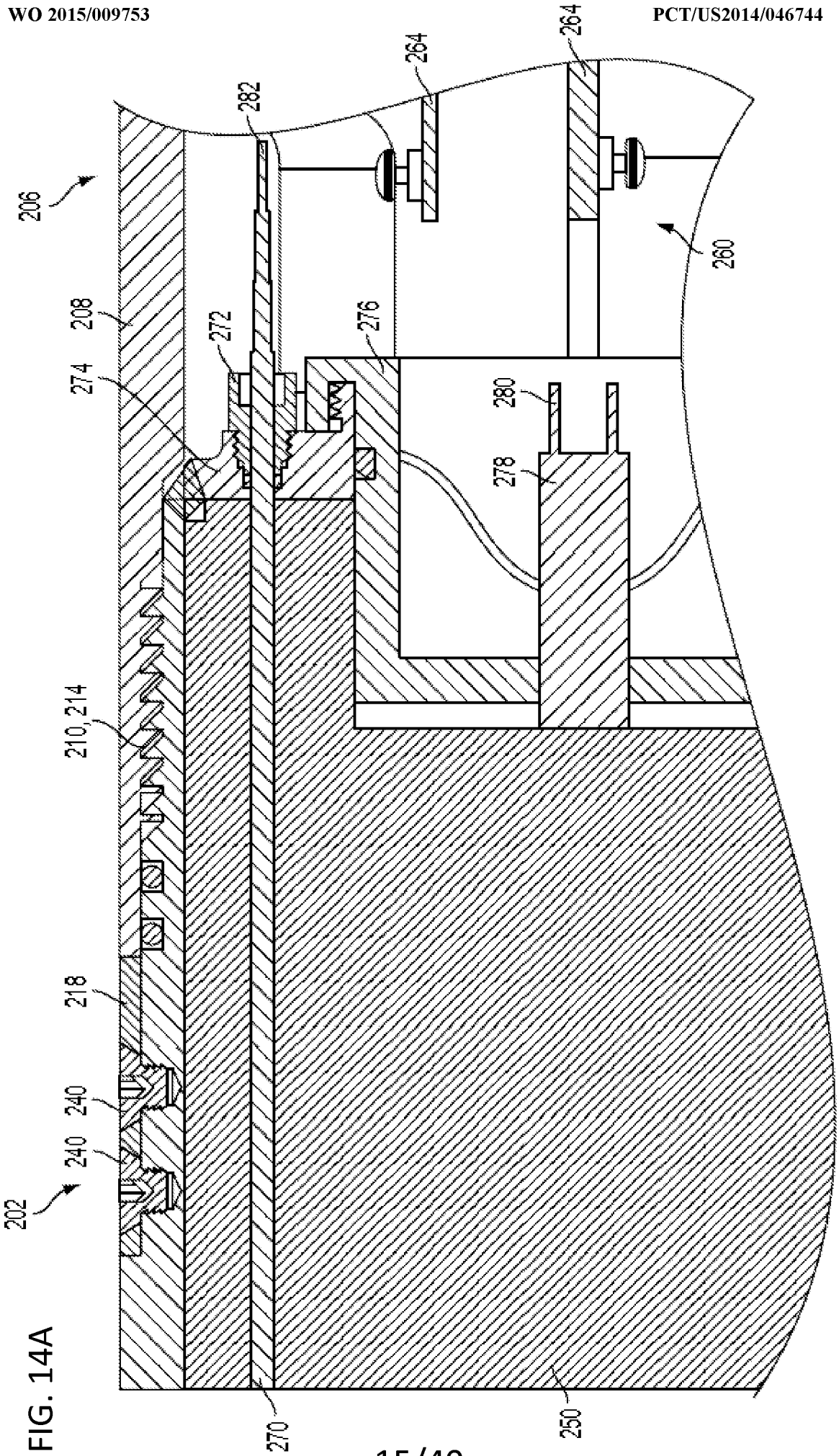
206
208
274
272
282
264
264
276
280
278
260
210, 214
218
240
240
202
270
250

FIG. 14A

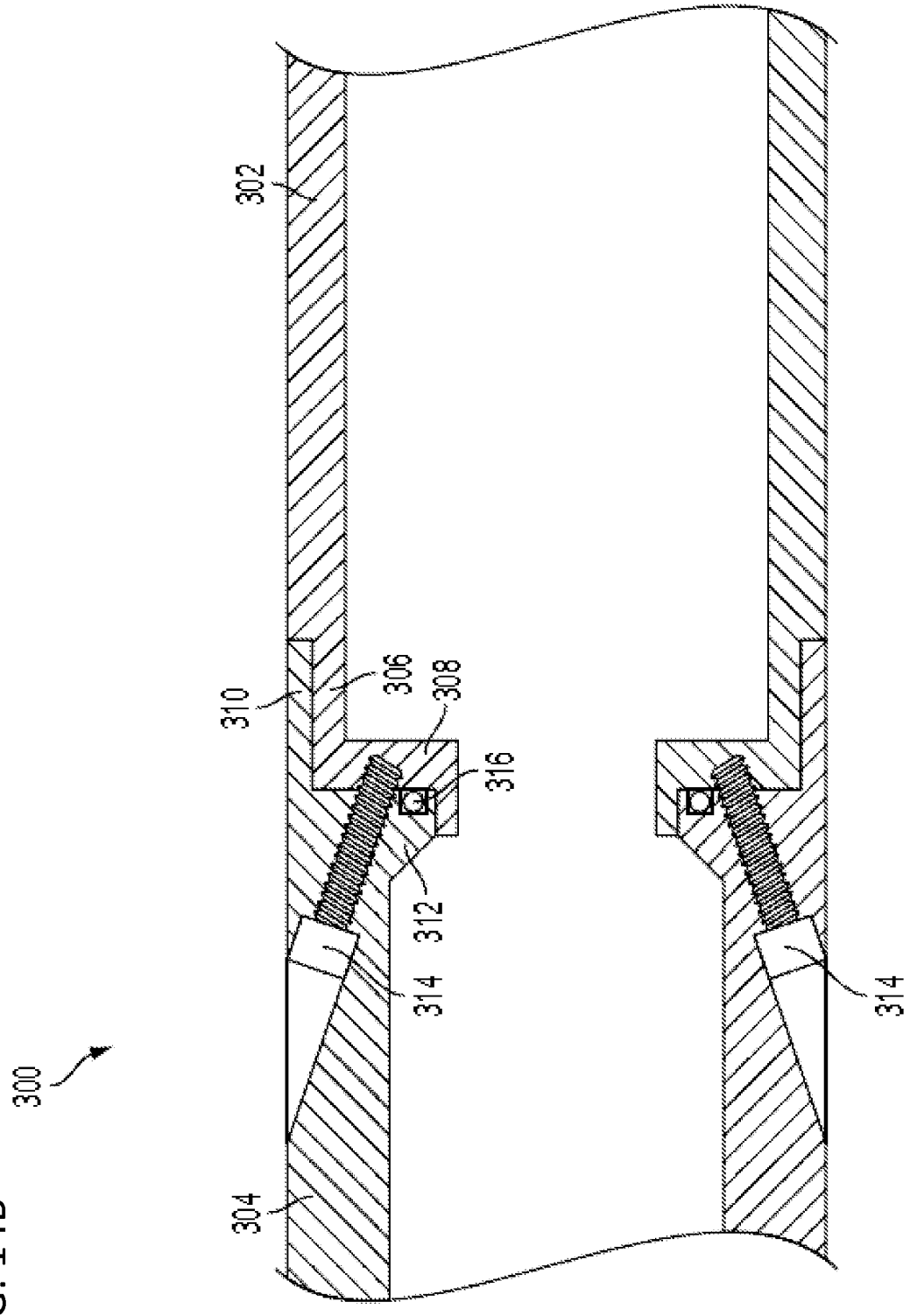

FIG. 14B

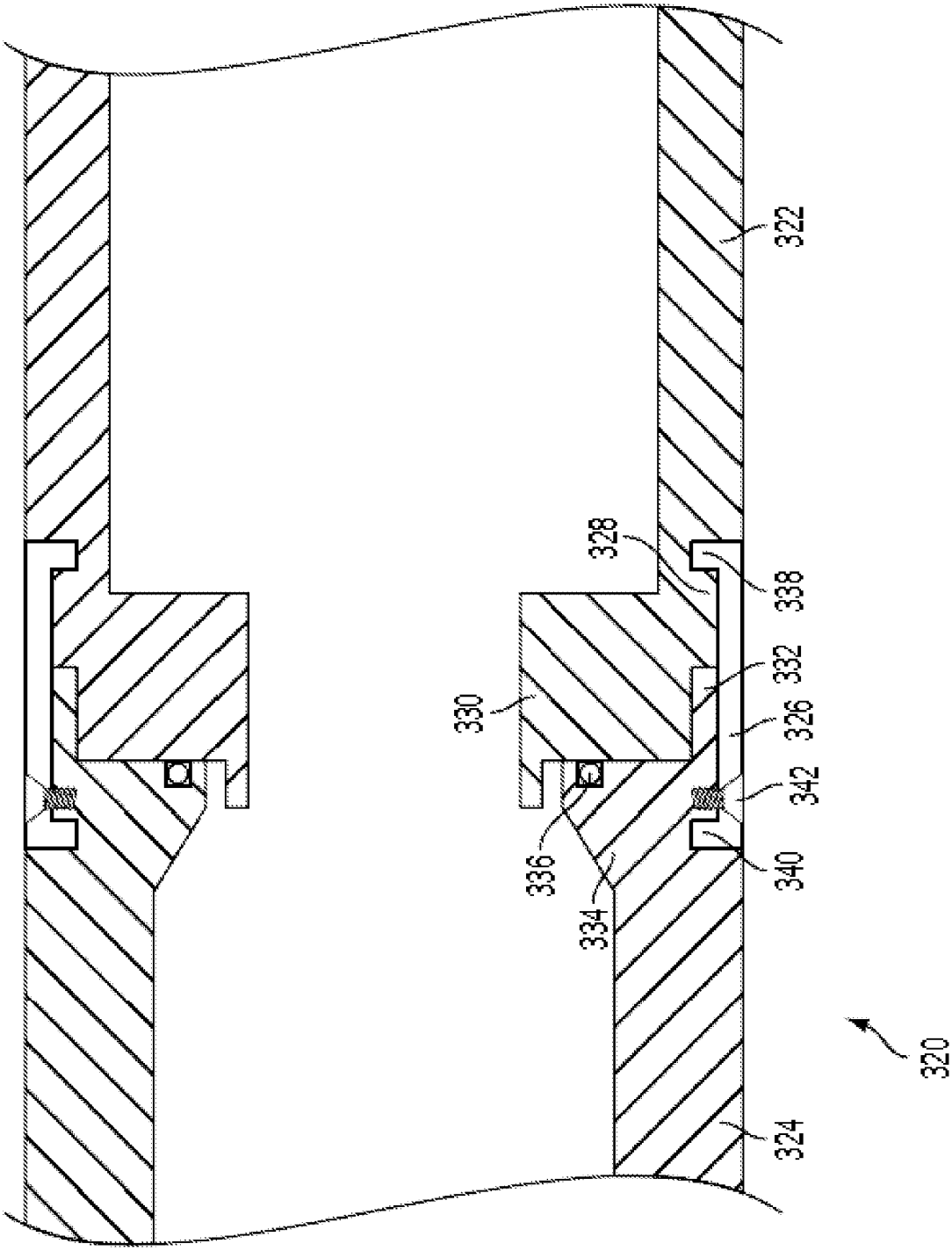

FIG. 14C

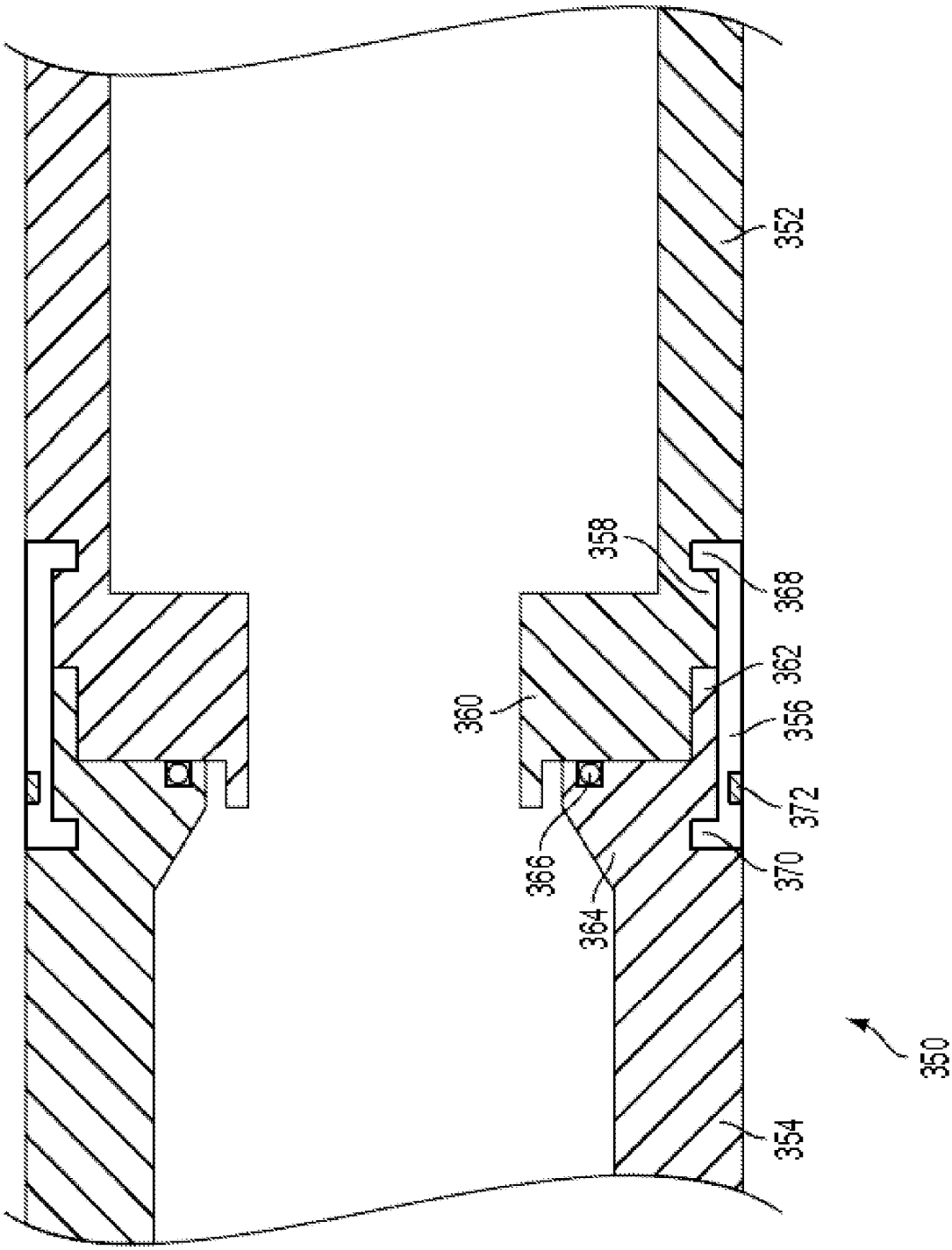

FIG. 14D

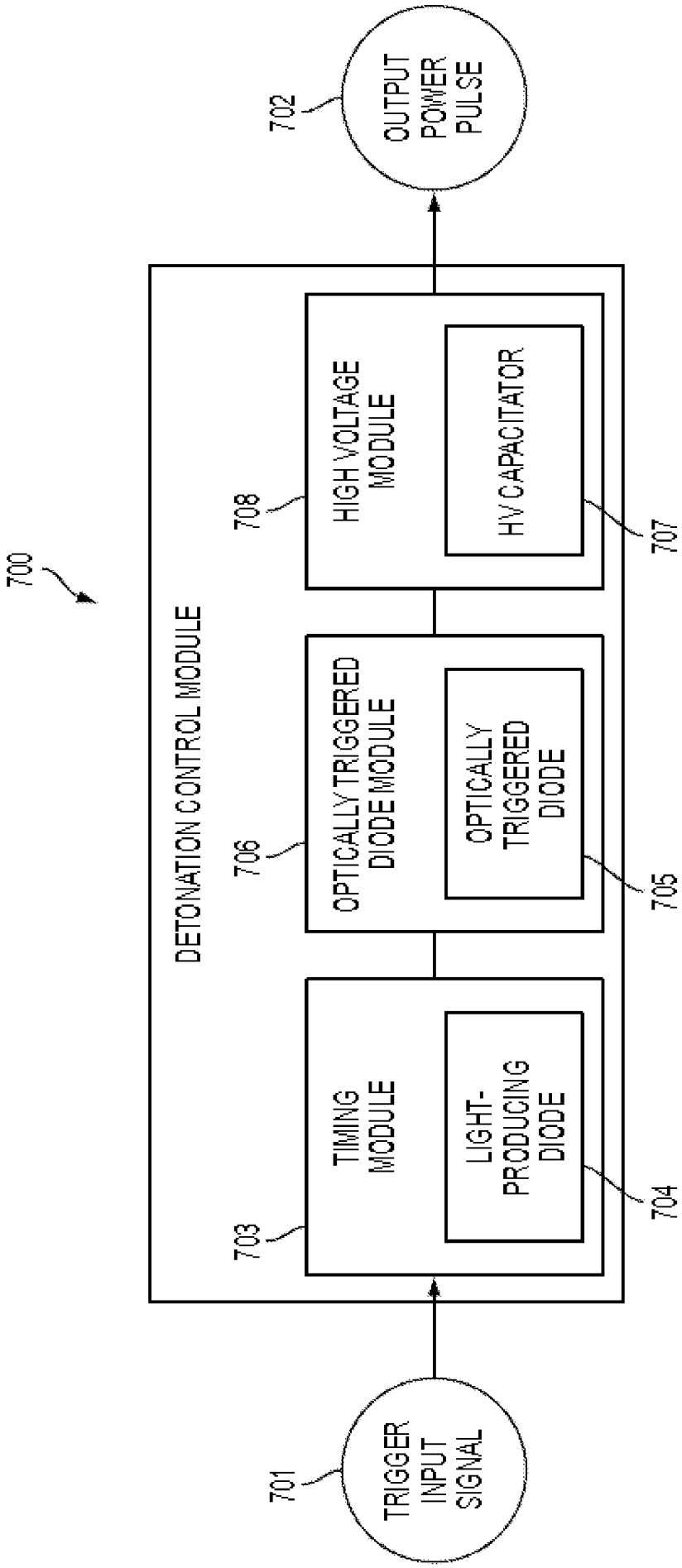
700
DETONATION CONTROL MODULE
TIMING MODULE
703
LIGHT-PRODUCING DIODE
704
OPTICALLY TRIGGERED DIODE MODULE
706
OPTICALLY TRIGGERED DIODE
705
HIGH VOLTAGE MODULE
708
HV CAPACITATOR
707
TRIGGER INPUT SIGNAL
701
OUTPUT POWER PULSE
702

FIG. 15

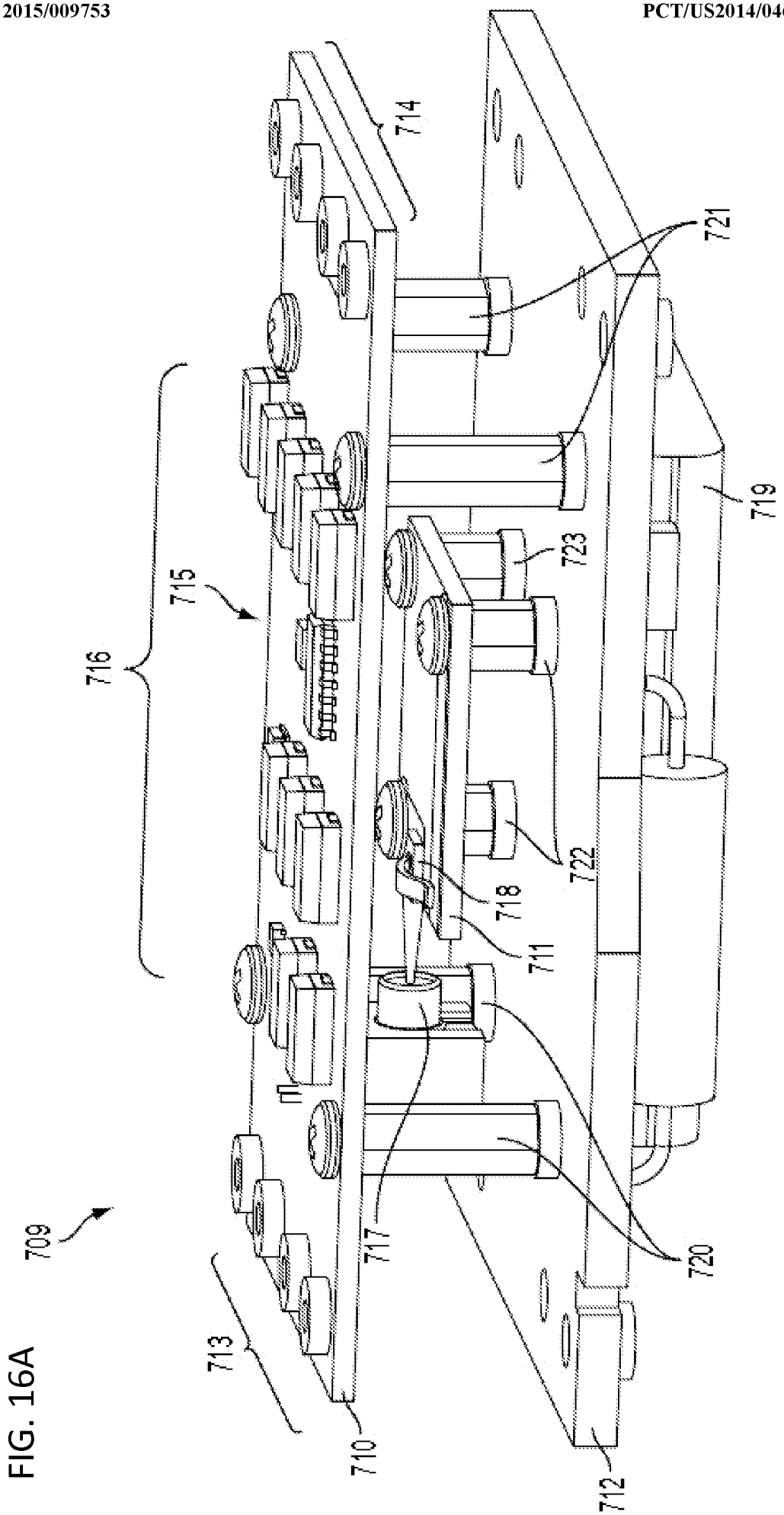

FIG. 16A

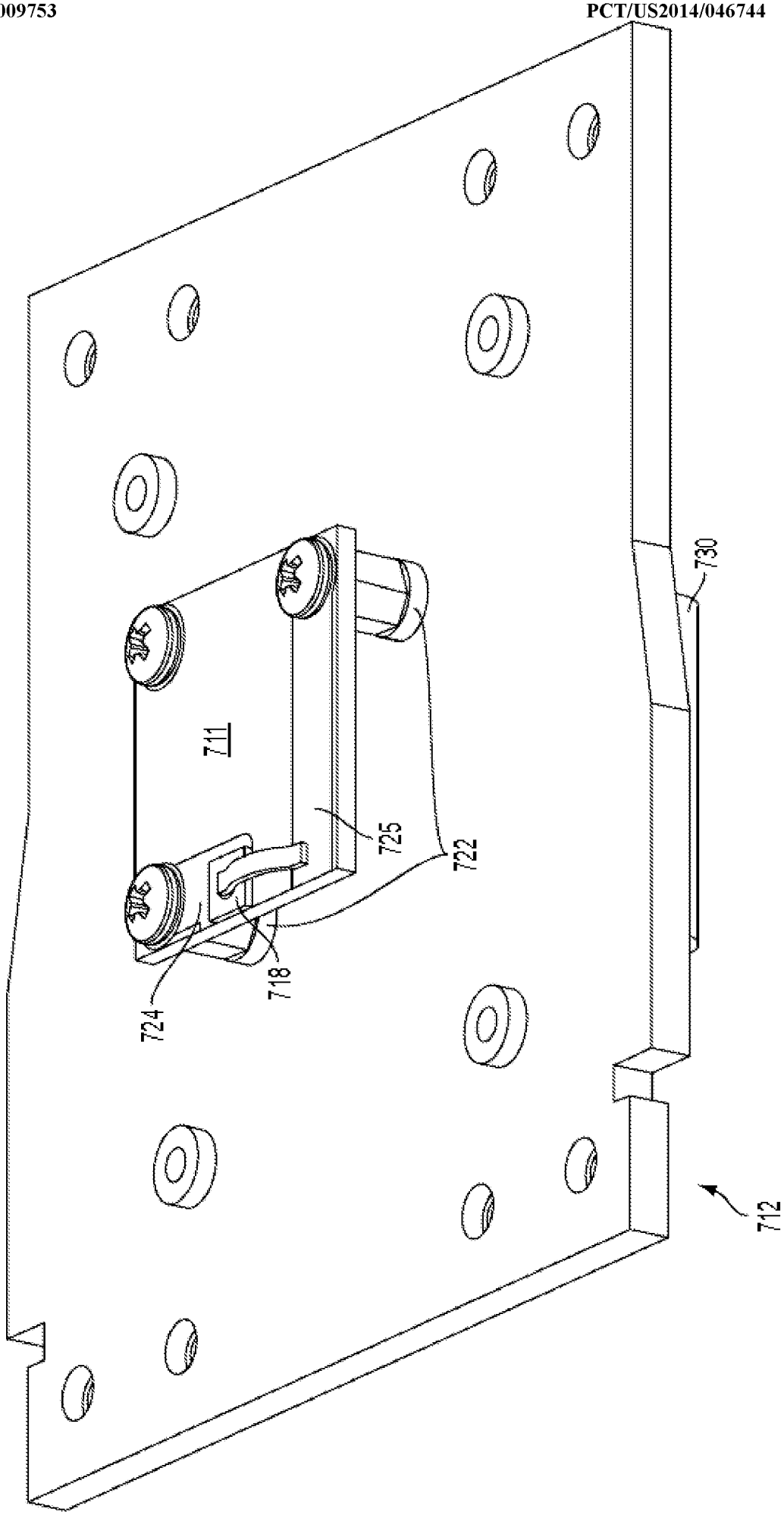

FIG. 16B

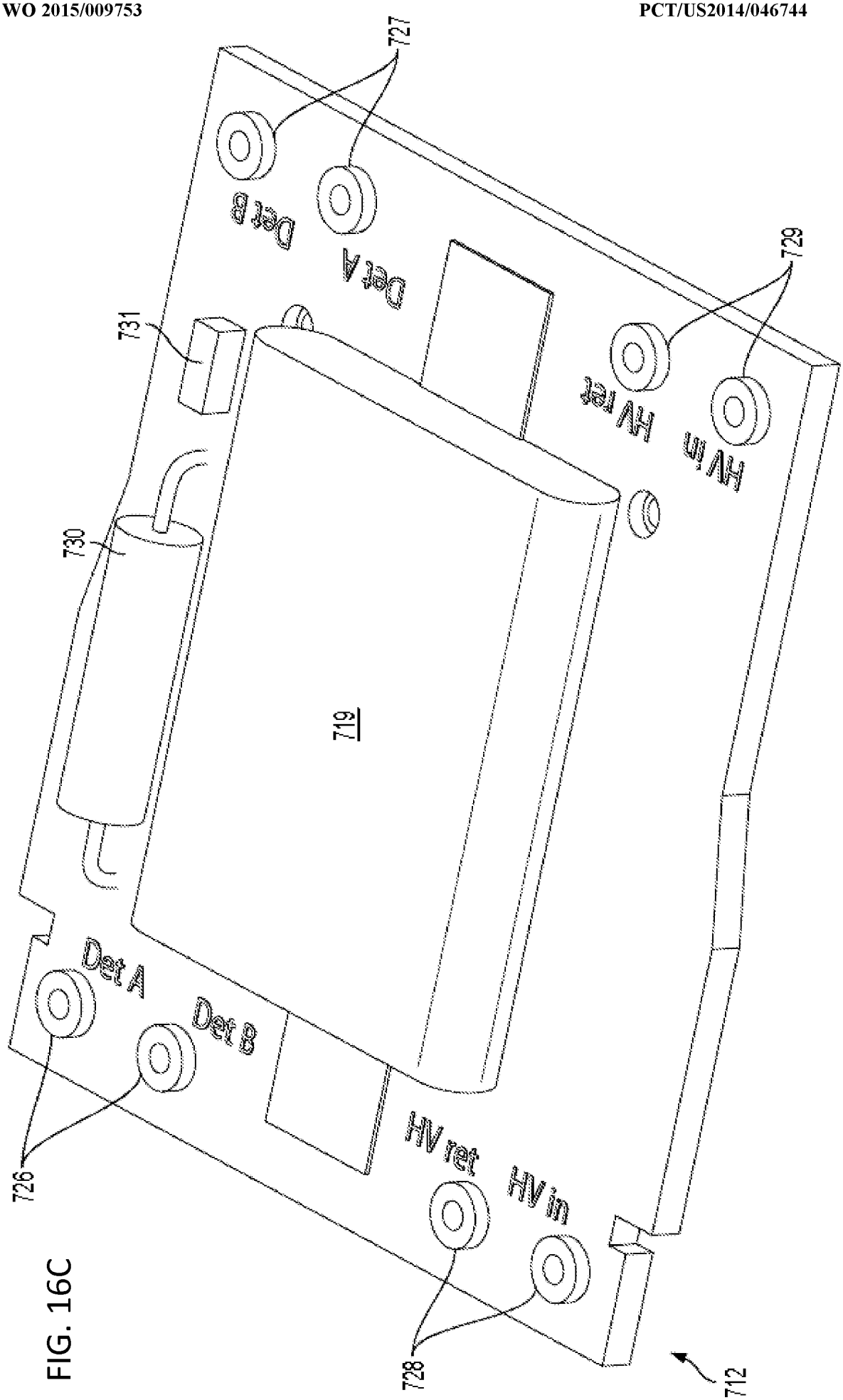
727
Det B
Det A
729
731
HV ret
HV in
730
719
Det A
Det B
726
HV ret
HV in
728
712

FIG. 16C

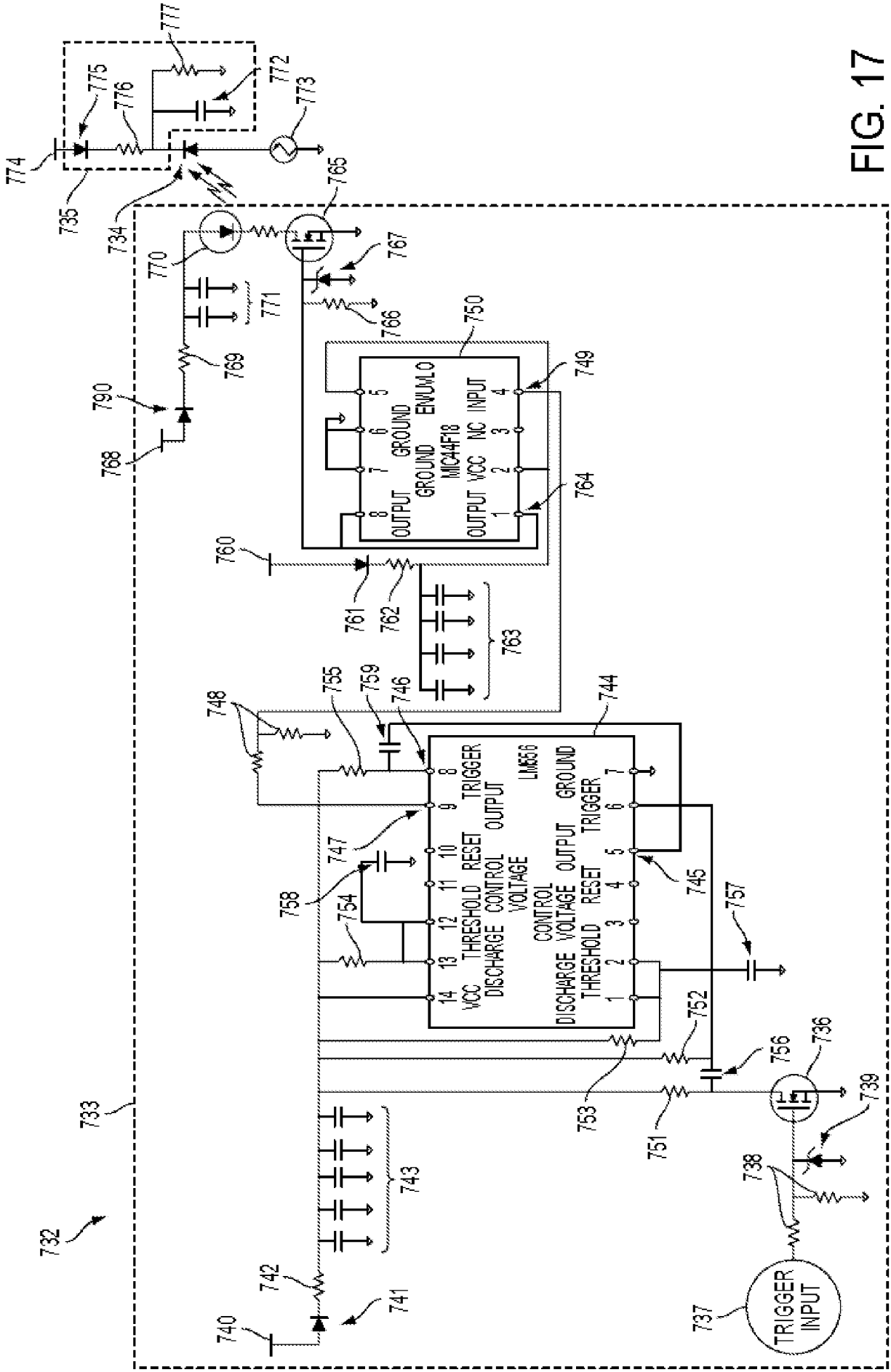
732
733
734
735
736
737
TRIGGER INPUT
738
739
740
741
742
743
744
745
746
747
748
749
750
751
752
753
754
755
756
757
758
759
760
761
762
763
764
765
766
767
768
769
770
771
772
773
774
775
776
777
790
LM556
VCC
DISCHARGE
THRESHOLD
CONTROL VOLTAGE
RESET
OUTPUT
TRIGGER
GROUND
MIC4F18
OUTPUT
GROUND
GROUND
VCC
NC
INPUT
ENVUVLO

FIG. 17

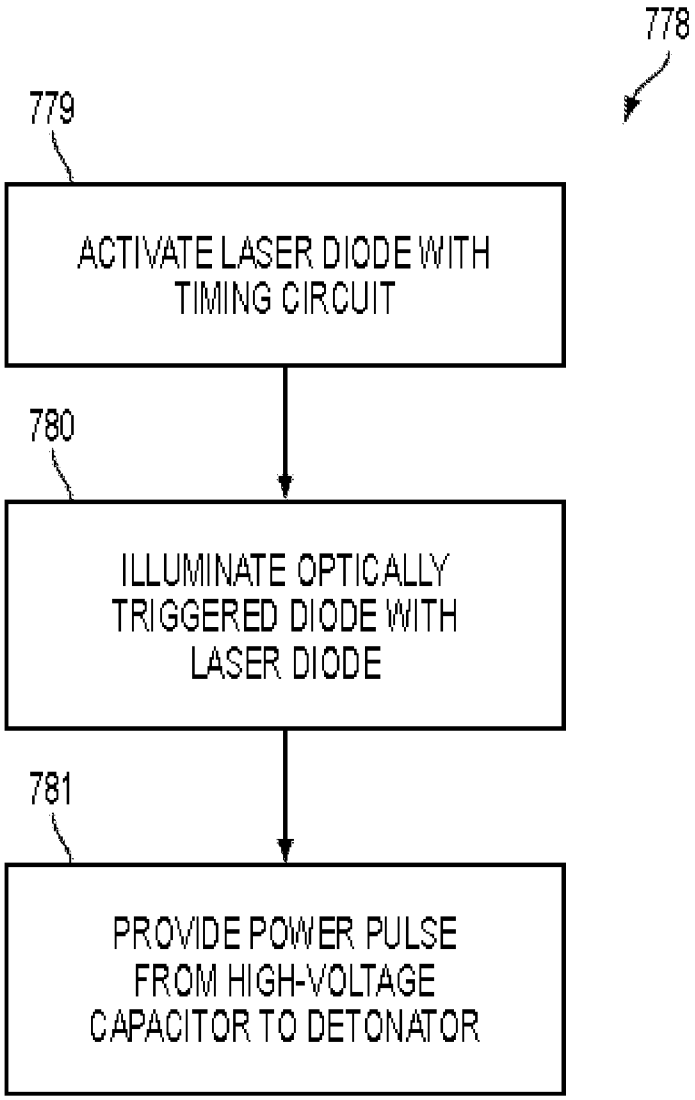
778
779
ACTIVATE LASER DIODE WITH TIMING CIRCUIT
780
ILLUMINATE OPTICALLY TRIGGERED DIODE WITH LASER DIODE
781
PROVIDE POWER PULSE FROM HIGH-VOLTAGE CAPACITOR TO DETONATOR

FIG. 18

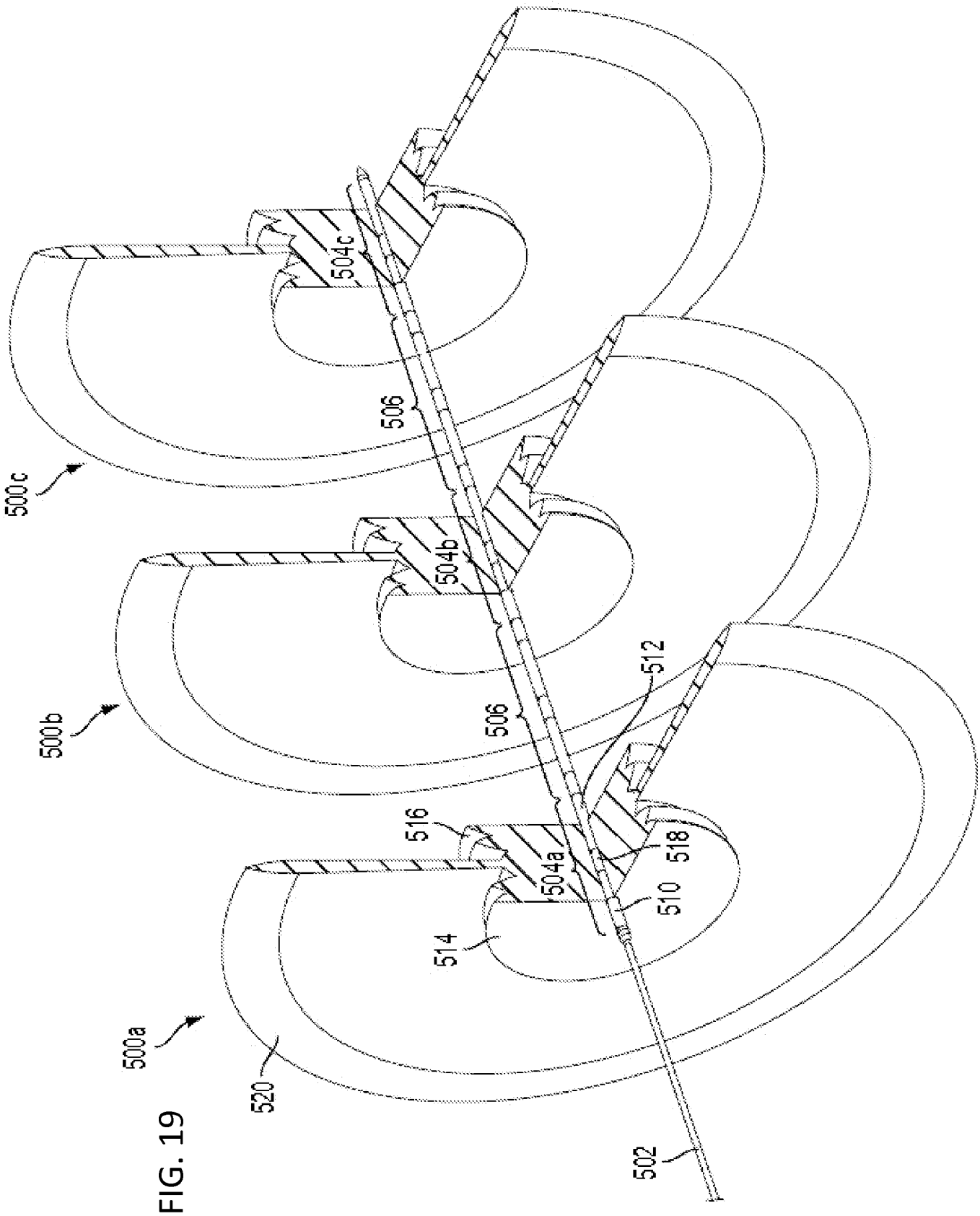
500c
500b
500a
504c
504b
504a
506
506
512
516
518
510
514
520
502

FIG. 19

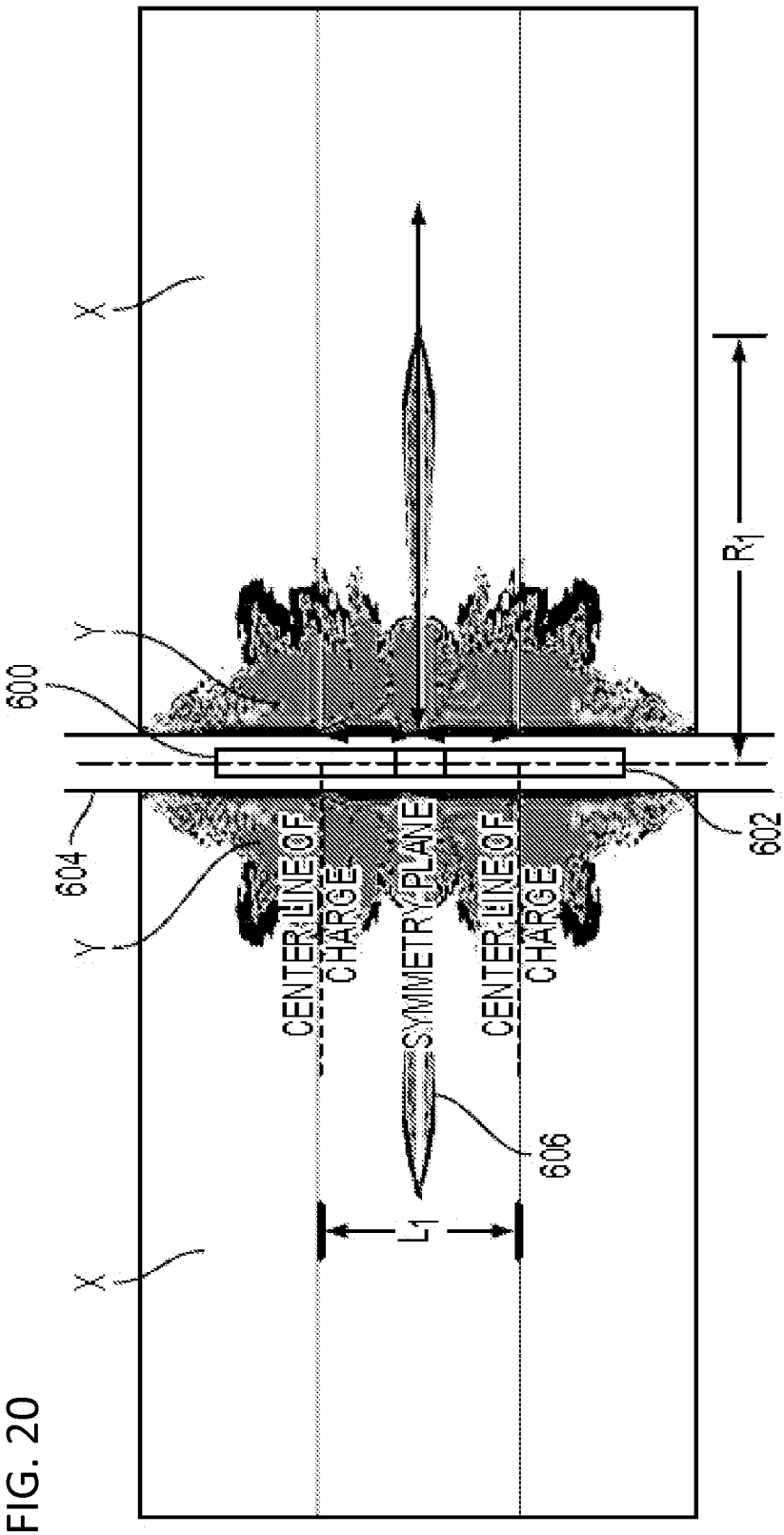
X
Y
600
604
602
606
CENTER LINE OF CHARGE
SYMMETRY PLANE
CENTER LINE OF CHARGE
R_1
L_1

FIG. 20

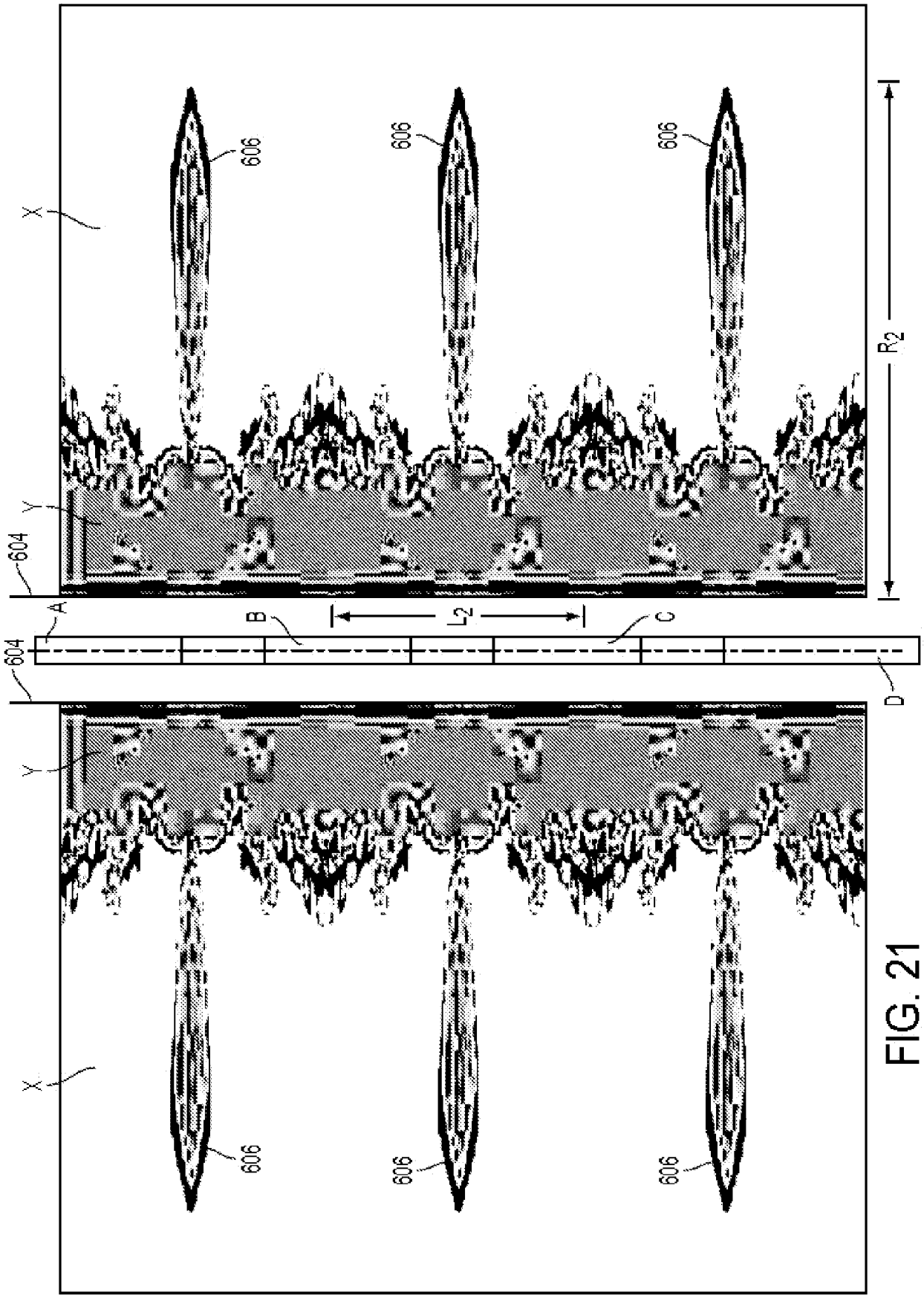

FIG. 21

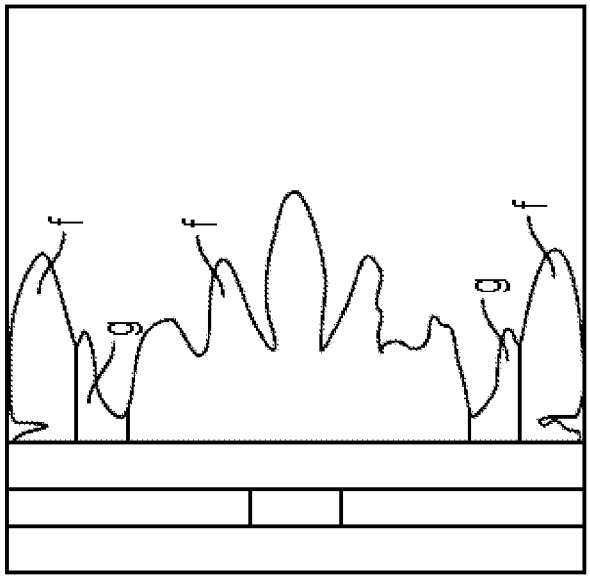

FIG. 22C

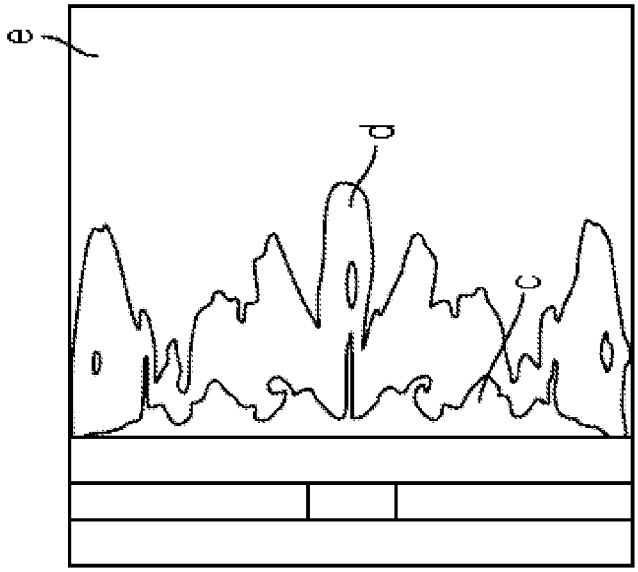

FIG. 22B

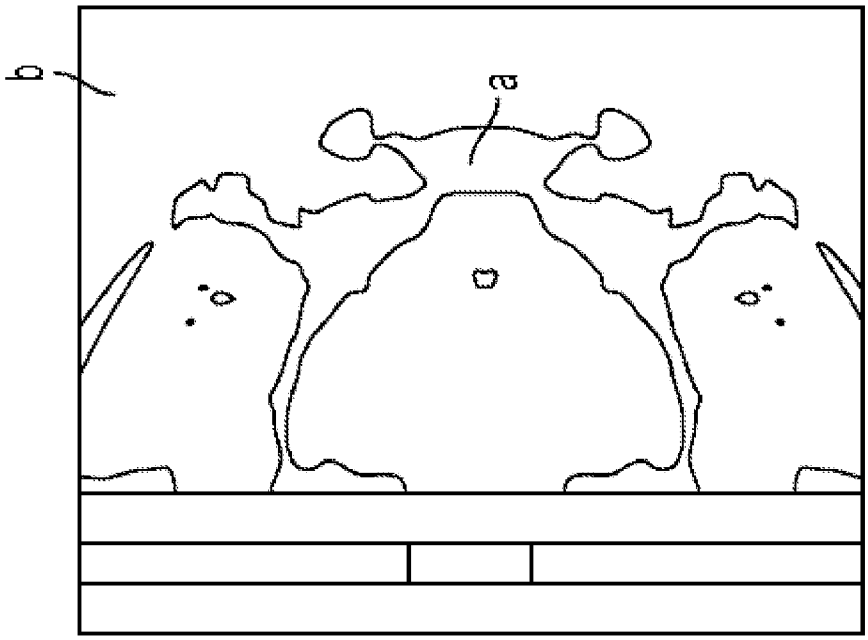

FIG. 22A

FIG. 23

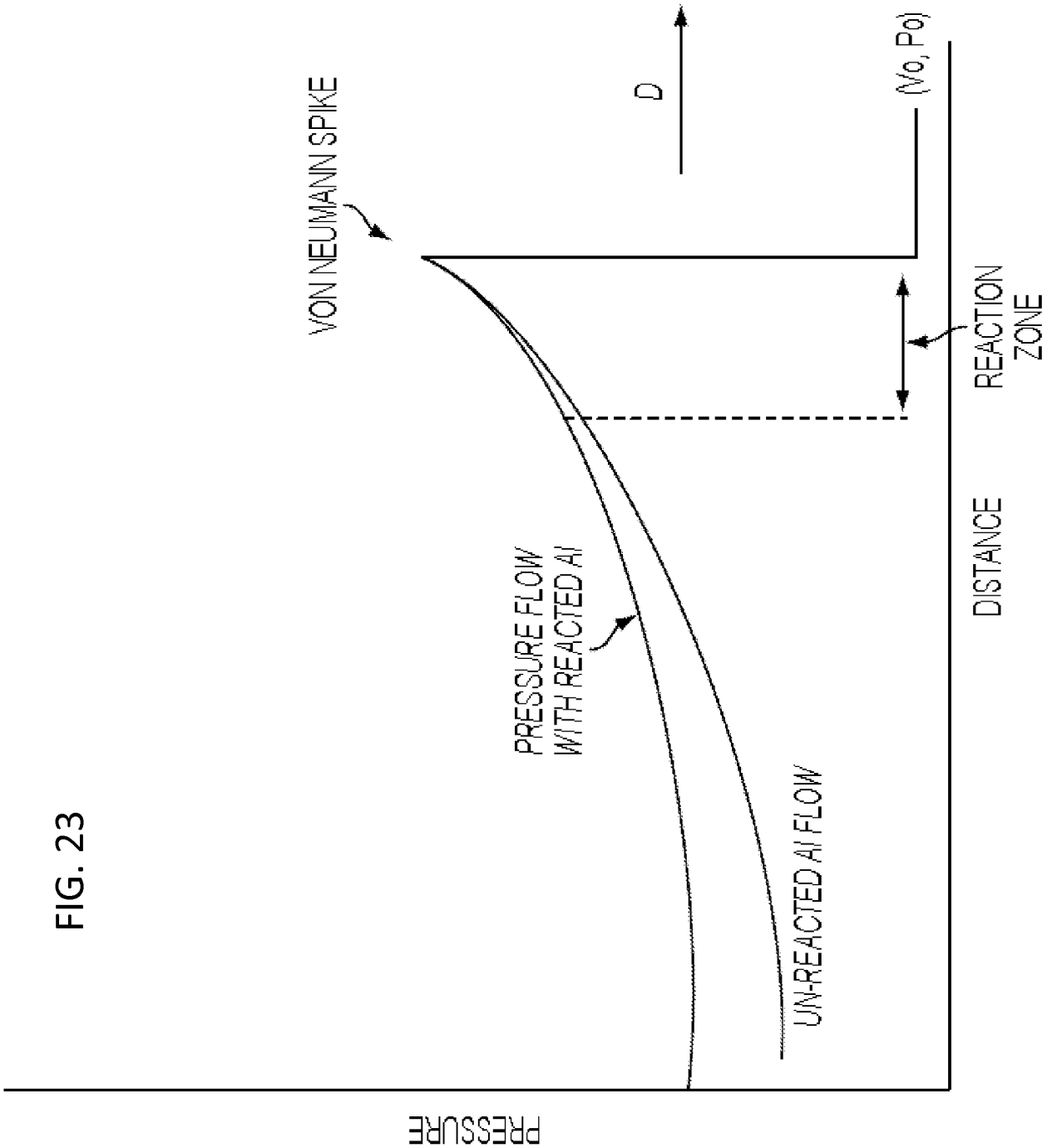
VON NEUMANN SPIKE
D
(Vo, Po)
REACTION ZONE
PRESSURE FLOW WITH REACTED AI
UN-REACTED AI FLOW
DISTANCE
PRESSURE

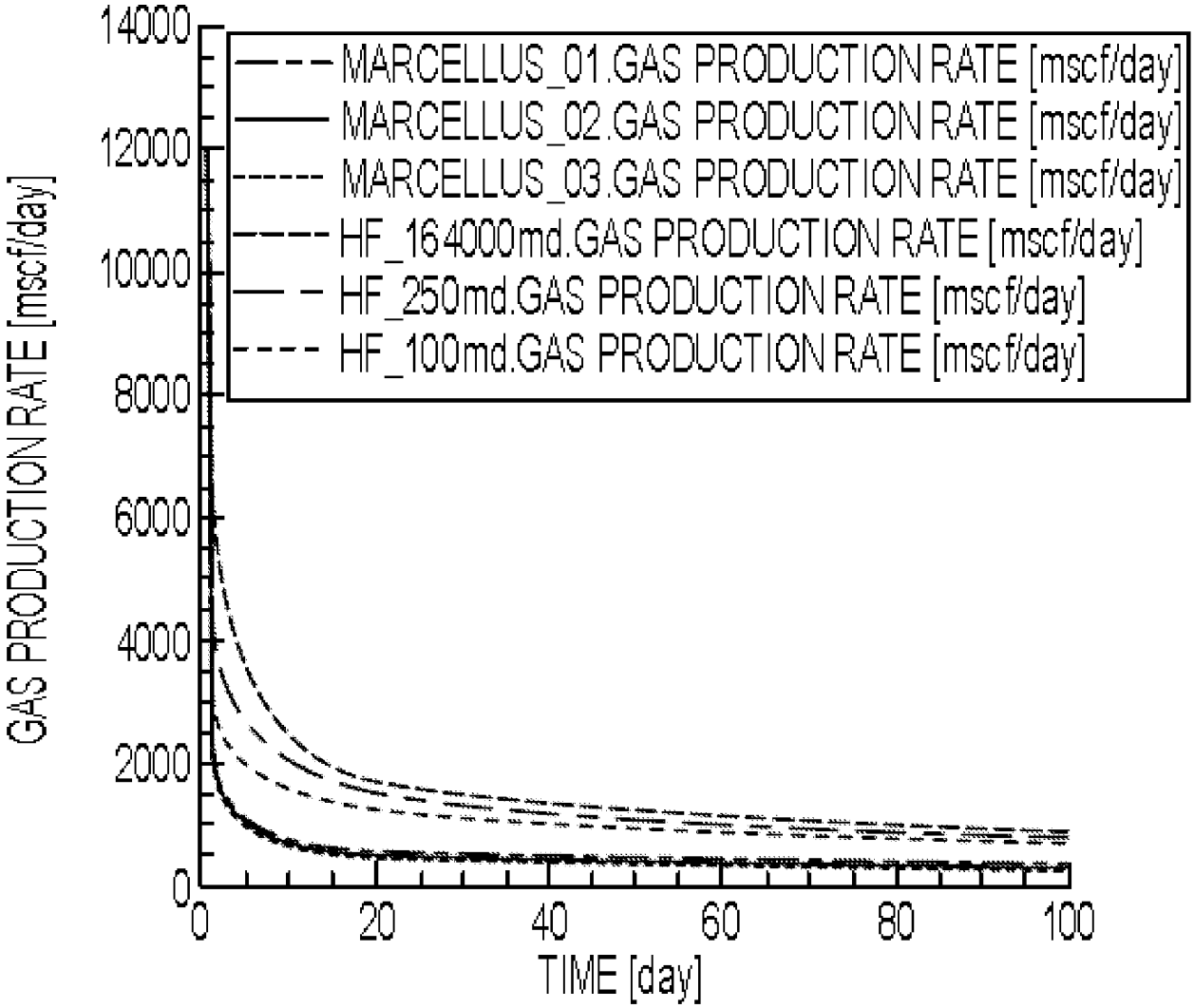
MARCELLUS_01.GAS PRODUCTION RATE [mscf/day]
MARCELLUS_02.GAS PRODUCTION RATE [mscf/day]
MARCELLUS_03.GAS PRODUCTION RATE [mscf/day]
HF_164000md.GAS PRODUCTION RATE [mscf/day]
HF_250md.GAS PRODUCTION RATE [mscf/day]
HF_100md.GAS PRODUCTION RATE [mscf/day]
GAS PRODUCTION RATE [mscf/day]
14000
12000
10000
8000
6000
4000
2000
0
0
20
40
60
80
100
TIME [day]

FIG. 24

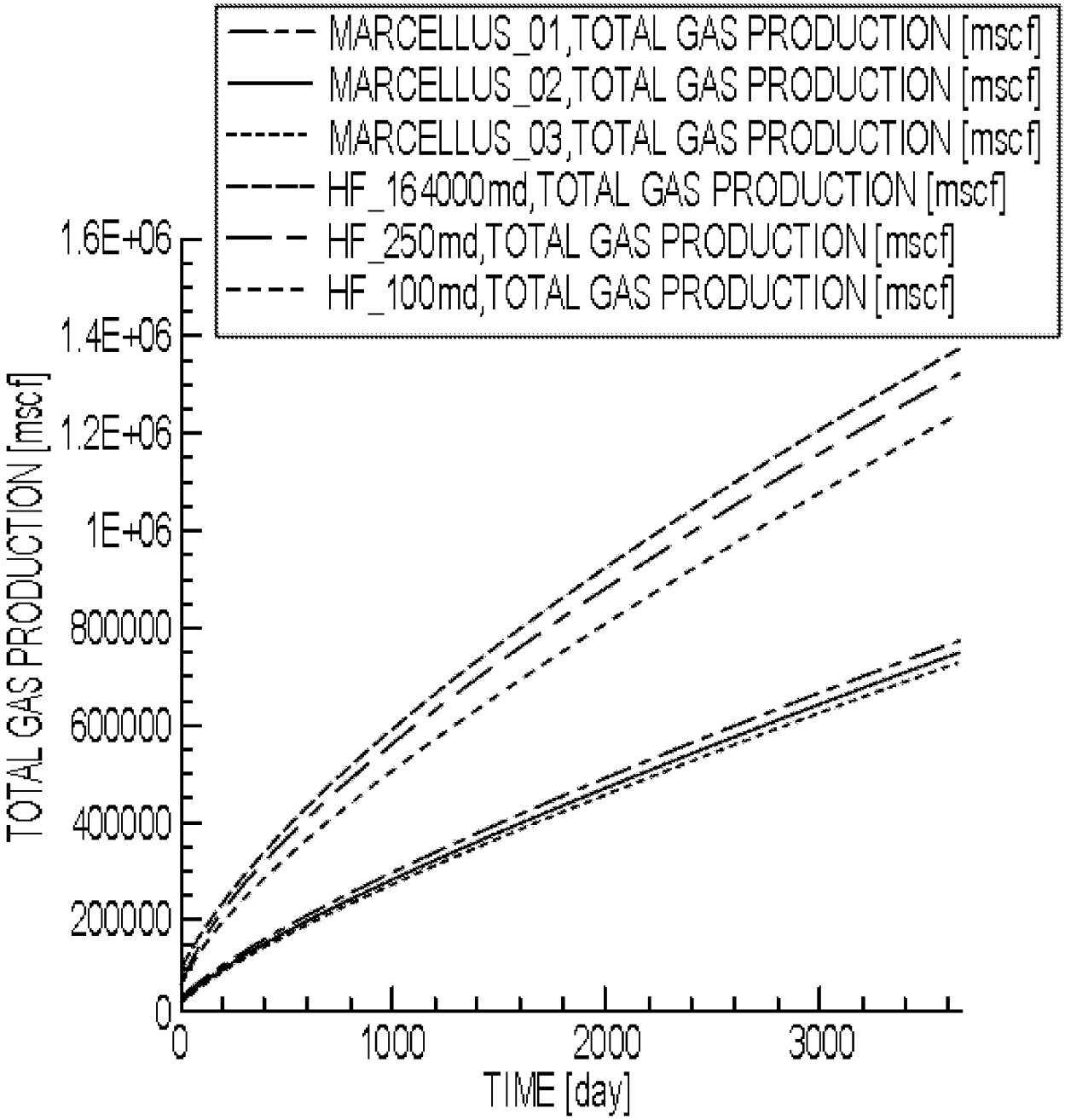
MARCELLUS_01,TOTAL GAS PRODUCTION [mscf]
MARCELLUS_02,TOTAL GAS PRODUCTION [mscf]
MARCELLUS_03,TOTAL GAS PRODUCTION [mscf]
HF_164000md,TOTAL GAS PRODUCTION [mscf]
HF_250md,TOTAL GAS PRODUCTION [mscf]
HF_100md,TOTAL GAS PRODUCTION [mscf]
TOTAL GAS PRODUCTION [mscf]
1.6E+06
1.4E+06
1.2E+06
1E+06
800000
600000
400000
200000
0
0
1000
2000
3000
TIME [day]

FIG. 25

FIG. 26A

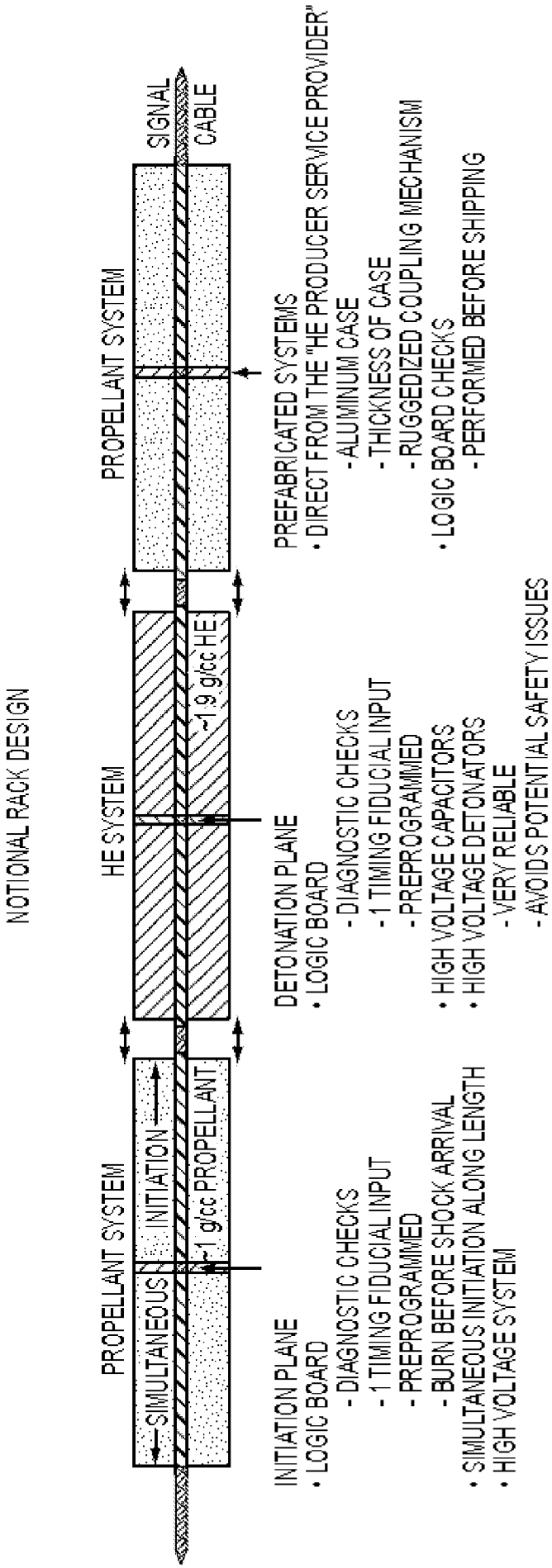

FIG. 26B

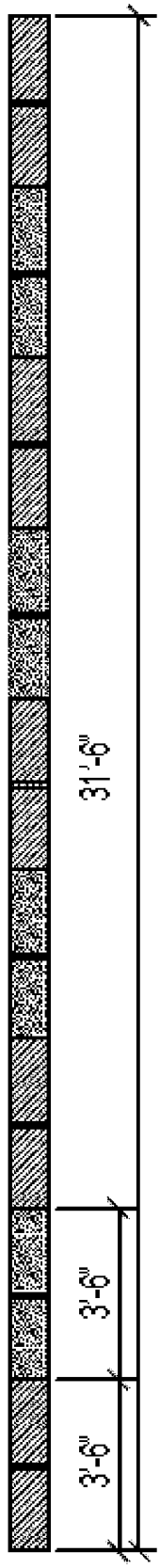

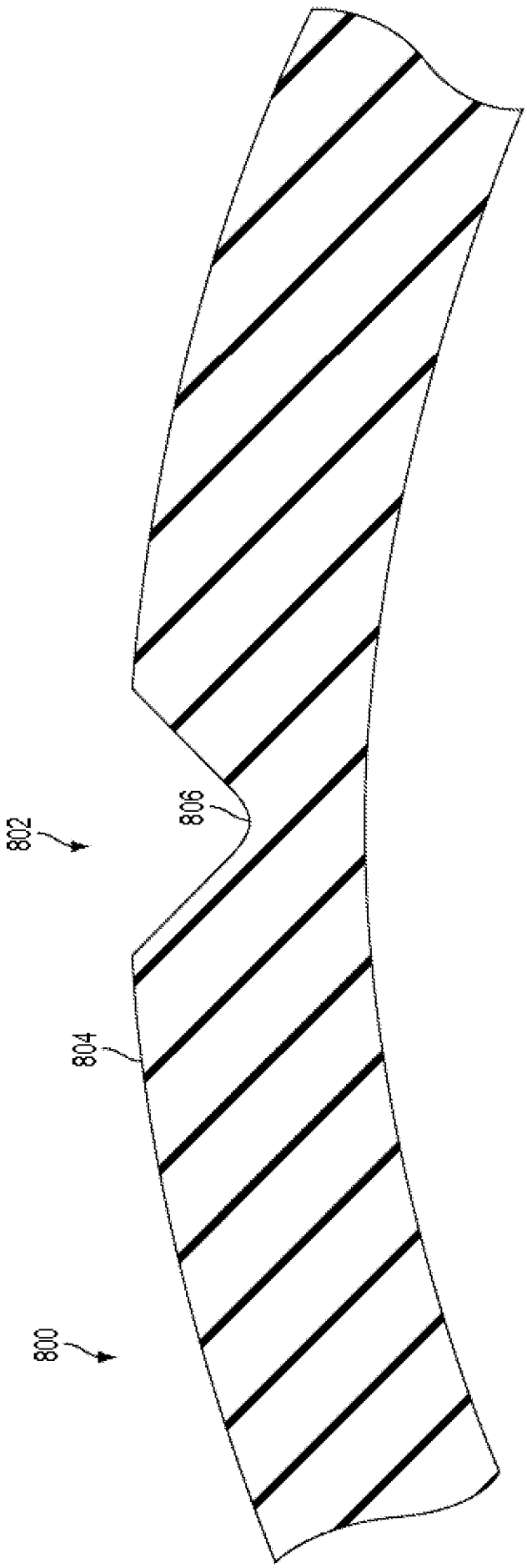

FIG. 27

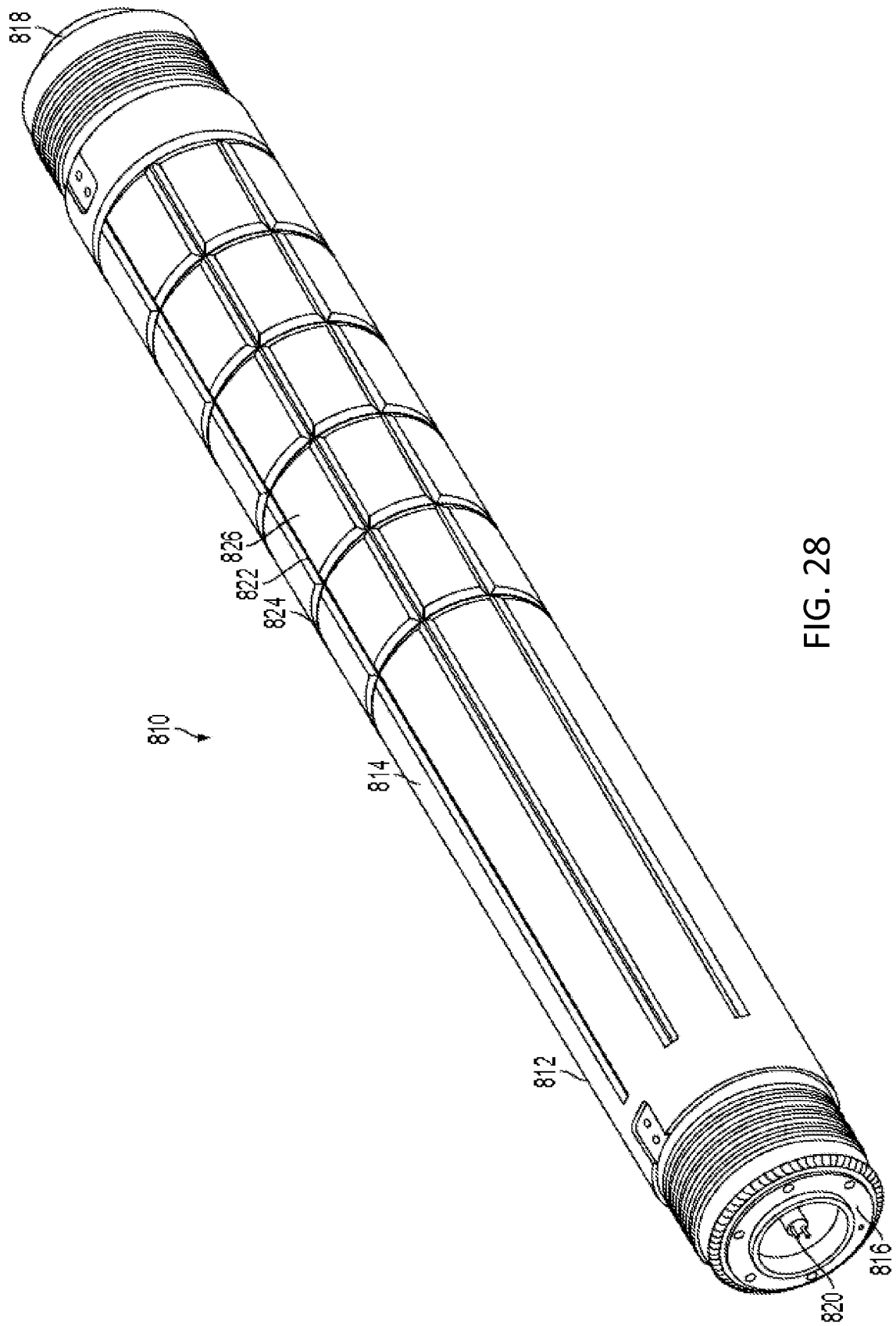

FIG. 28

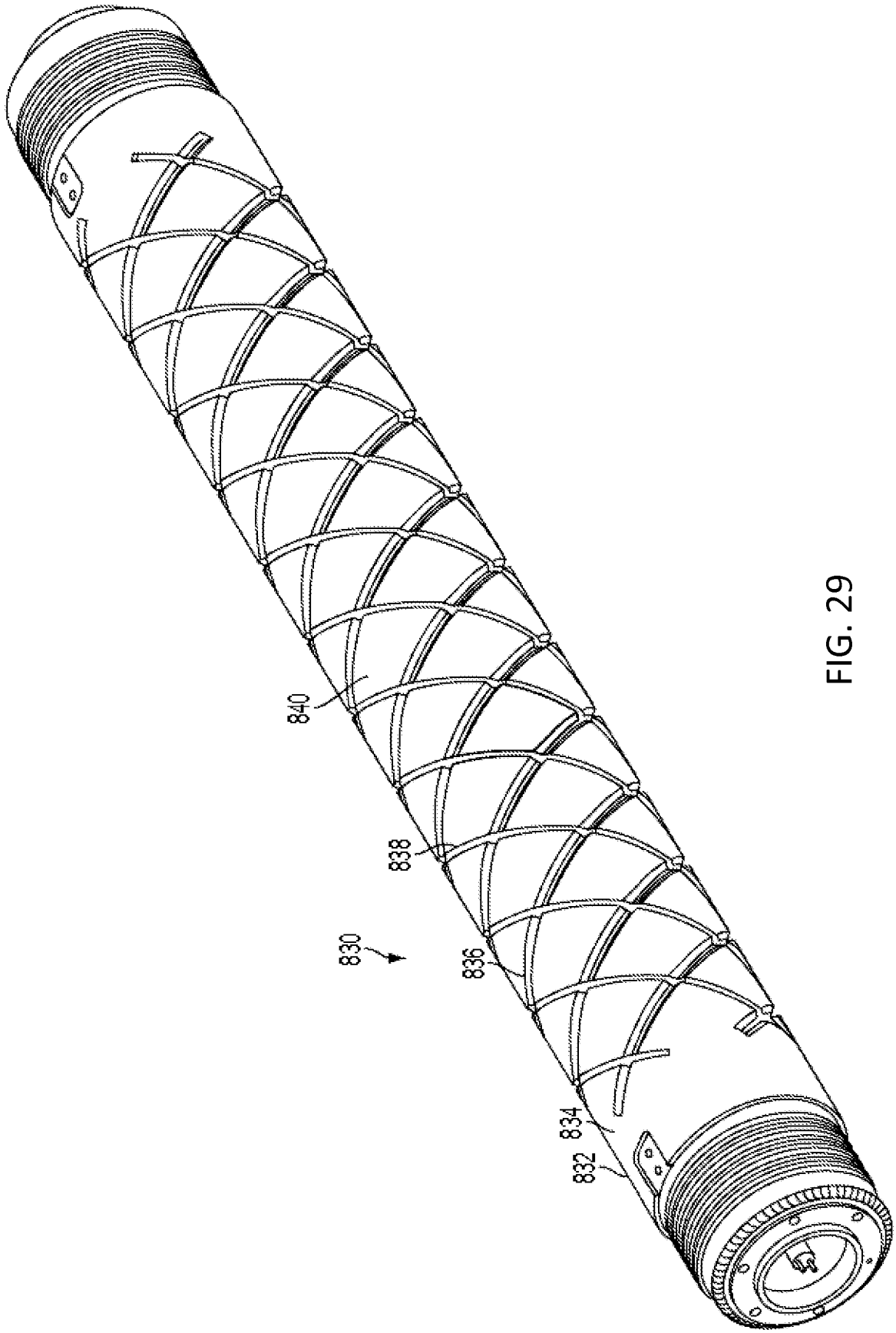

FIG. 29

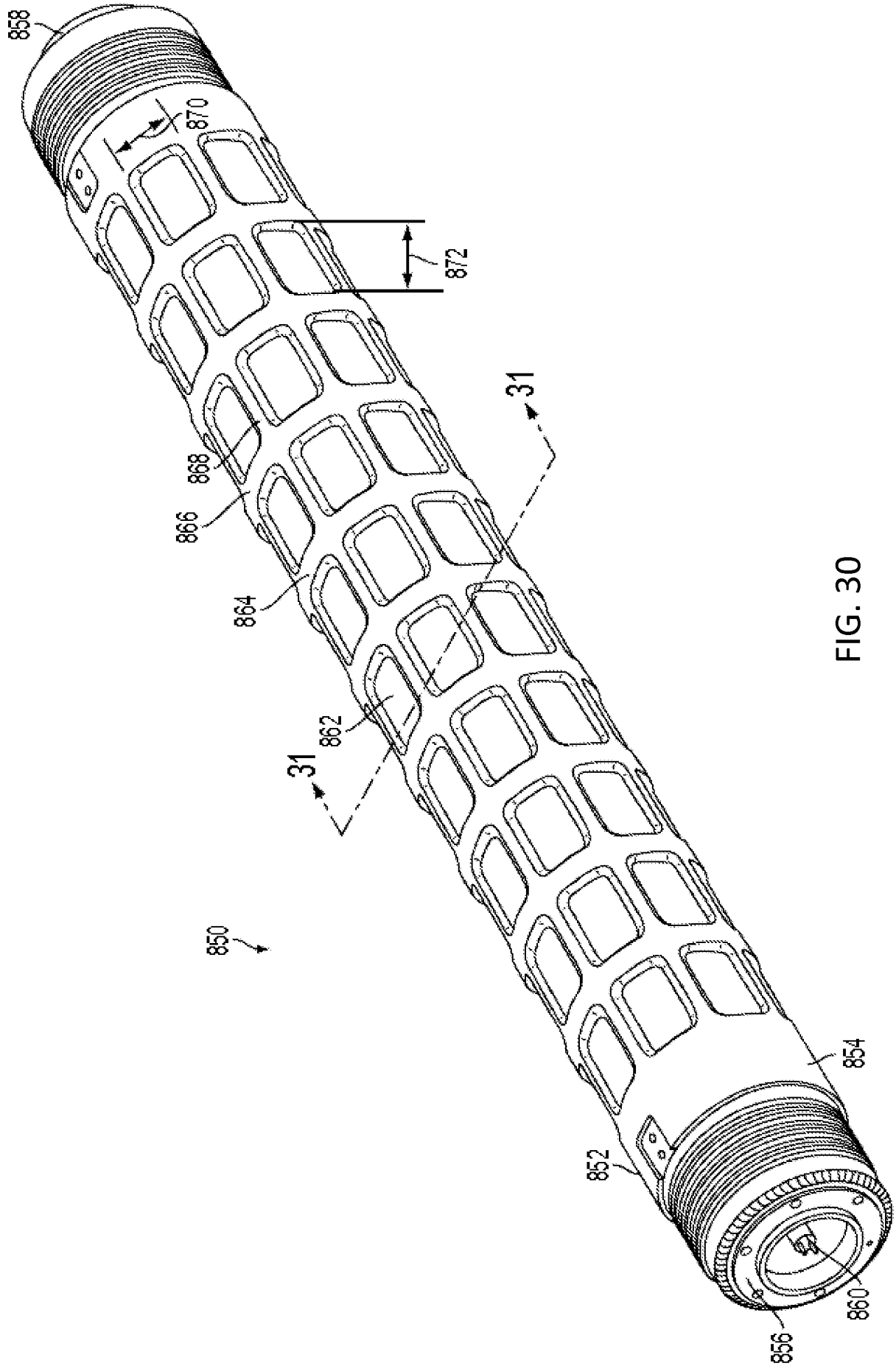

FIG. 30

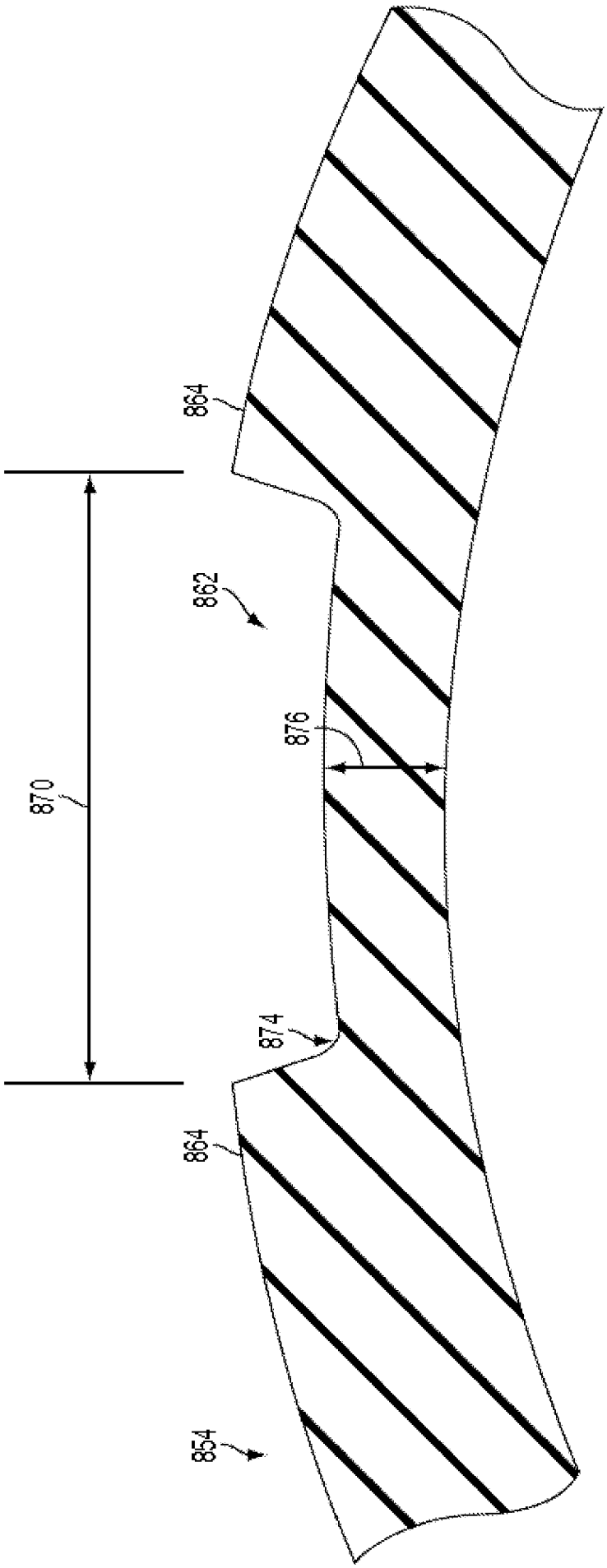

FIG. 31

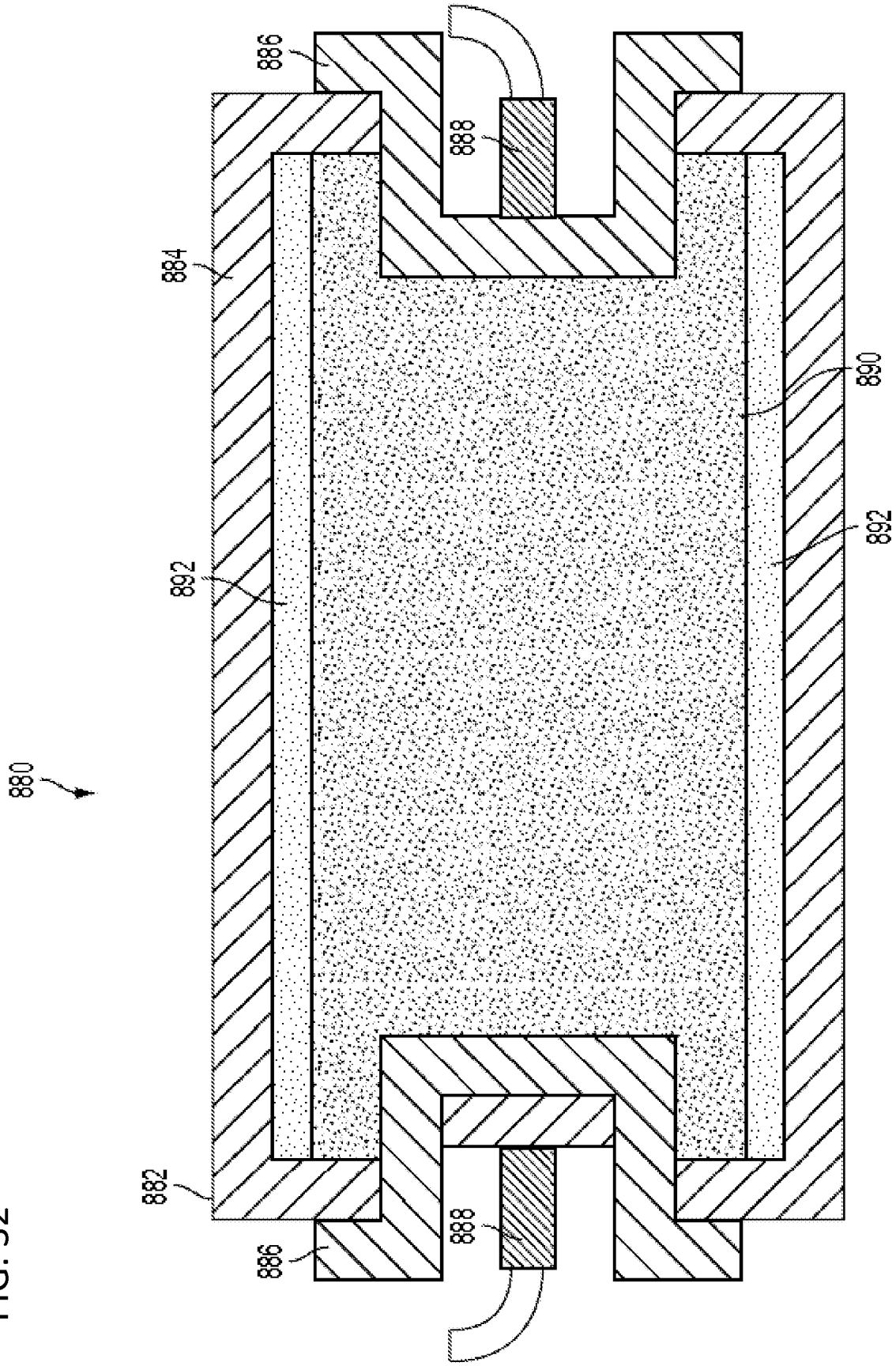

FIG. 32

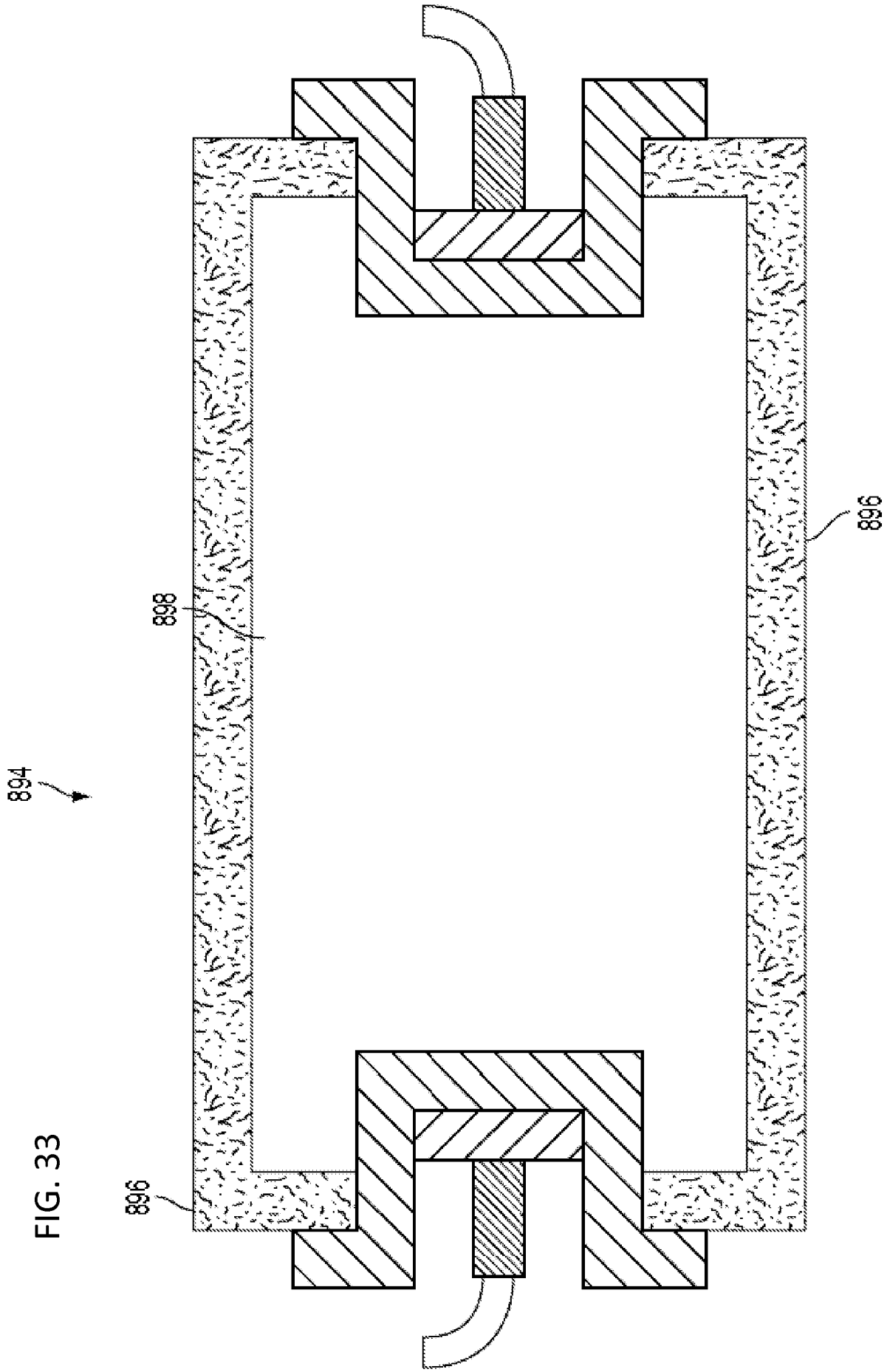

FIG. 33

FIG. 34

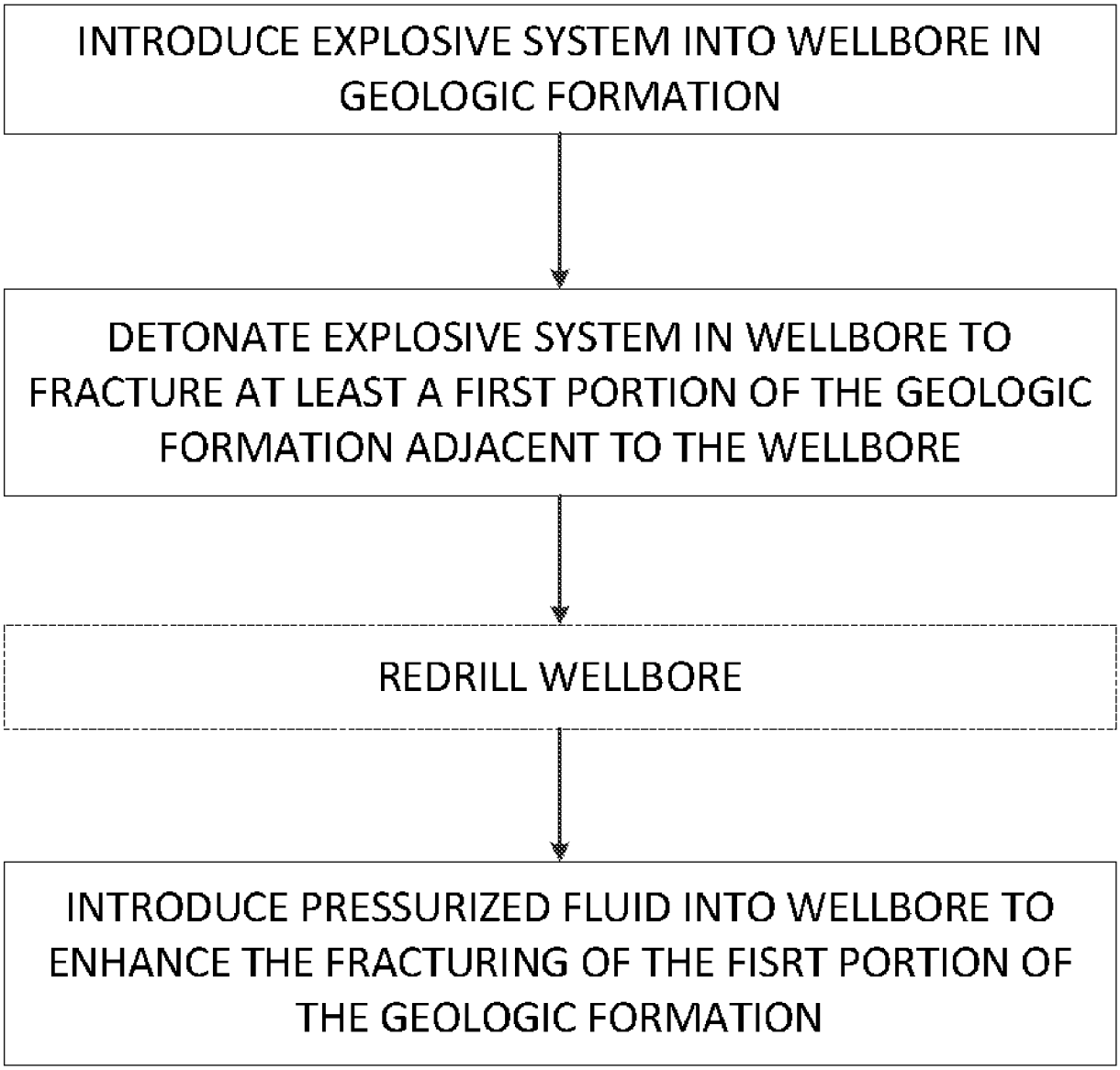
INTRODUCE EXPLOSIVE SYSTEM INTO WELLBORE IN GEOLOGIC FORMATION
DETONATE EXPLOSIVE SYSTEM IN WELLBORE TO FRACTURE AT LEAST A FIRST PORTION OF THE GEOLOGIC FORMATION ADJACENT TO THE WELLBORE
REDRILL WELLBORE
INTRODUCE PRESSURIZED FLUID INTO WELLBORE TO ENHANCE THE FRACTURING OF THE FISRT PORTION OF THE GEOLOGIC FORMATION

INTERNATIONAL SEARCH REPORT

International application No.
PCT/US2014/046744

A. CLASSIFICATION OF SUBJECT MATTER
IPC(8) - E21B 43/26 (2014.01)
CPC - E21B 43/26 (2014.10)
According to International Patent Classification (IPC) or to both national classification and IPC

B. FIELDS SEARCHED

Minimum documentation searched (classification system followed by classification symbols)
IPC(8) - E21B 43/11, 43/17, 43/26, 43/117, 43/267 (2014.01)
CPC - E21B 43/114, 43/116, 43/16, 43/162, 43/26 (2014.10)

Documentation searched other than minimum documentation to the extent that such documents are included in the fields searched
USPC - 102/286, 289, 290; 166/55.1, 63, 297, 308.1; 175/4.54, 4.58, 4.6; 340/854.4

Electronic data base consulted during the international search (name of data base and, where practicable, search terms used)
PatBase, Google Scholar, ProQuest Dialog

C. DOCUMENTS CONSIDERED TO BE RELEVANT

Category*	Citation of document, with indication, where appropriate, of the relevant passages	Relevant to claim No.
X	US 5,598,891 A (SNIDER et al) 04 February 1997 (04.02.1997) entire document	1, 3-5
A	US 4,590,997 A (STOWE) 27 May 1986 (27.05.1986) entire document	1-5
A	US 4,391,337 A (FORD et al) 05 July 1983 (05.07.1983) entire document	1-5
A	US 6,336,506 B2 (WESSON) 08 January 2002 (08.01.2002) entire document	1-5

☐ Further documents are listed in the continuation of Box C. ☐

* Special categories of cited documents:
"A" document defining the general state of the art which is not considered to be of particular relevance
"E" earlier application or patent but published on or after the international filing date
"L" document which may throw doubts on priority claim(s) or which is cited to establish the publication date of another citation or other special reason (as specified)
"O" document referring to an oral disclosure, use, exhibition or other means
"P" document published prior to the international filing date but later than the priority date claimed
"T" later document published after the international filing date or priority date and not in conflict with the application but cited to understand the principle or theory underlying the invention
"X" document of particular relevance; the claimed invention cannot be considered novel or cannot be considered to involve an inventive step when the document is taken alone
"Y" document of particular relevance; the claimed invention cannot be considered to involve an inventive step when the document is combined with one or more other such documents, such combination being obvious to a person skilled in the art
"&" document member of the same patent family

Date of the actual completion of the international search
13 October 2014

Date of mailing of the international search report
04 NOV 2014

Name and mailing address of the ISA/US
Mail Stop PCT, Attn: ISA/US, Commissioner for Patents
P.O. Box 1450, Alexandria, Virginia 22313-1450
Facsimile No. 571-273-3201

Authorized officer:
Blaine R. Copenheaver
PCT Helpdesk: 571-272-4300
PCT OSP: 571-272-7774