Office de la Propriété Intellectuelle du Canada
Un organisme d'Industrie Canada

Canadian Intellectual Property Office
An agency of Industry Canada

CA 2360802 A1 2000/07/27

(21) 2 360 802

(12) DEMANDE DE BREVET CANADIEN
CANADIAN PATENT APPLICATION

(13) A1

(86) Date de dépôt PCT/PCT Filing Date: 2000/01/25
(87) Date publication PCT/PCT Publication Date: 2000/07/27
(85) Entrée phase nationale/National Entry: 2001/07/26
(86) N° demande PCT/PCT Application No.: US 00/01613
(87) N° publication PCT/PCT Publication No.: WO 00/43729
(30) Priorité/Priority: 1999/01/26 (60/117,301) US

(51) Cl.Int.^{7}/Int.Cl.^{7} G01B 9/02

(71) Demandeur/Applicant:
THE BOARD OF GOVERNORS FOR HIGHER EDUCATION, STATE OF RHODE ISLAND AND PROVIDENCE PLANTATIONS, US

(72) Inventeur/Inventor:
GREGORY, OTTO J., US

(74) Agent: BORDEN LADNER GERVAIS LLP

(54) Titre : JAUGES DE CONTRAINTE ACTIVES POUR EVALUATION DES DEGATS D'ORIGINE SISMIQUE
(54) Title: ACTIVE STRAIN GAGES FOR EARTHQUAKE DAMAGE ASSESSMENT

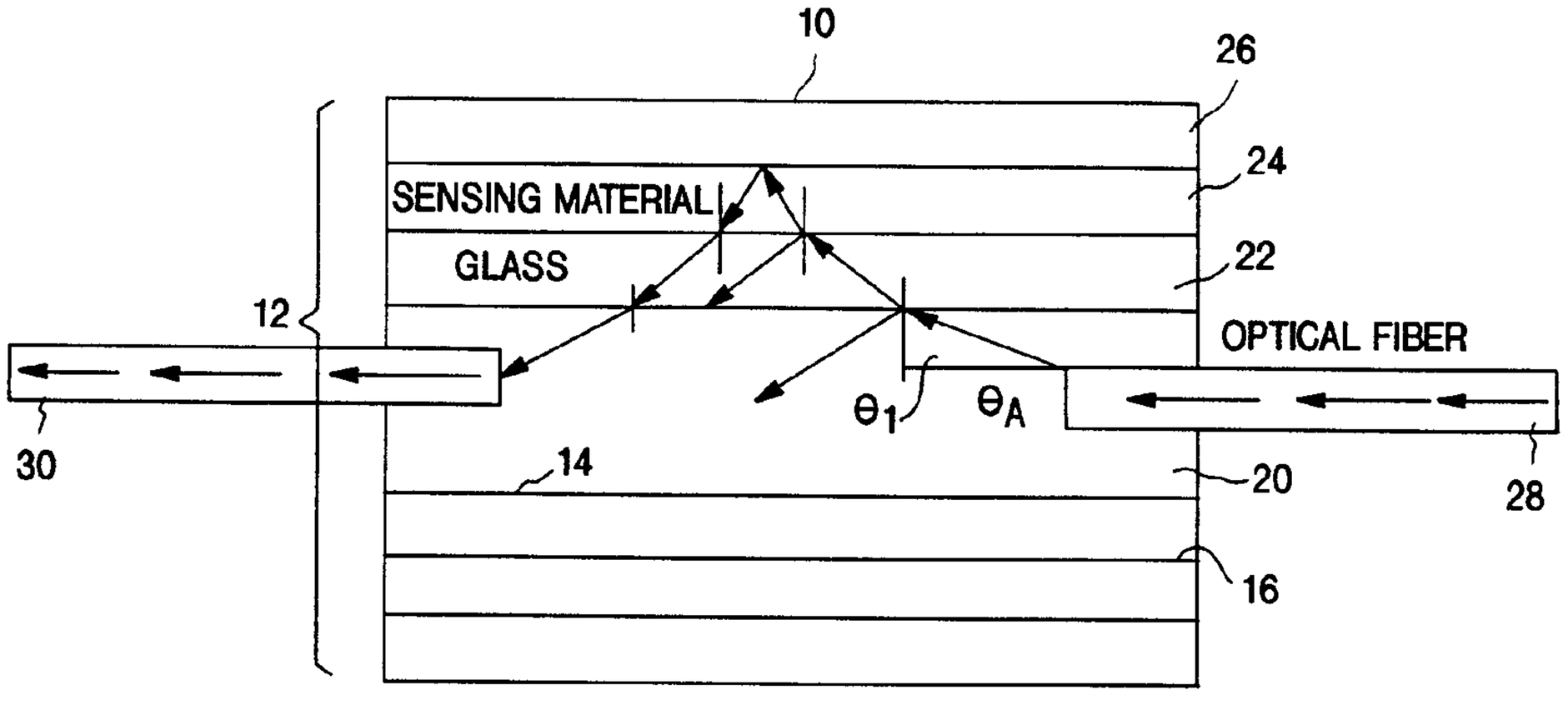

(57) Abrégé/Abstract:
The optical waveguide sensor (10) is comprised of a housing (12) having an exterior (16) and an interior surface (14). The exterior surface (16) is coated with at least two layers, the first layer comprised of a low index of refraction material (24) and the second layer comprised of a highly reflective material (26). The housing is in communication with first (28) and second (30) optical fibers.

PCT

WORLD INTELLECTUAL PROPERTY ORGANIZATION
International Bureau

INTERNATIONAL APPLICATION PUBLISHED UNDER THE PATENT COOPERATION TREATY (PCT)

(51) International Patent Classification [7] :
G01B 9/02

A1

(11) International Publication Number: **WO 00/43729**

(43) International Publication Date: 27 July 2000 (27.07.00)

(21) International Application Number: PCT/US00/01613

(22) International Filing Date: 25 January 2000 (25.01.00)

(30) Priority Data:
60/117,301 26 January 1999 (26.01.99) US

(71) Applicant *(for all designated States except US)*: THE BOARD OF GOVERNORS FOR HIGHER EDUCATION, STATE OF RHODE ISLAND AND PROVIDENCE PLANTATIONS [US/US]; 199 Promenade Street, Providence, RI 02908 (US).

(72) Inventor; and
(75) Inventor/Applicant *(for US only)*: GREGORY, Otto, J. [US/US]; 87 West Wind Road, Wakefield, RI 02879 (US).

(74) Agents: STEVENS, Richard, L. et al.; Samuels, Gauthier & Stevens, Suite 3300, 225 Franklin Street, Boston, MA 02110 (US).

(81) Designated States: AU, CA, CN, JP, KR, US, European patent (AT, BE, CH, CY, DE, DK, ES, FI, FR, GB, GR, IE, IT, LU, MC, NL, PT, SE).

Published
With international search report.

(54) Title: ACTIVE STRAIN GAGES FOR EARTHQUAKE DAMAGE ASSESSMENT

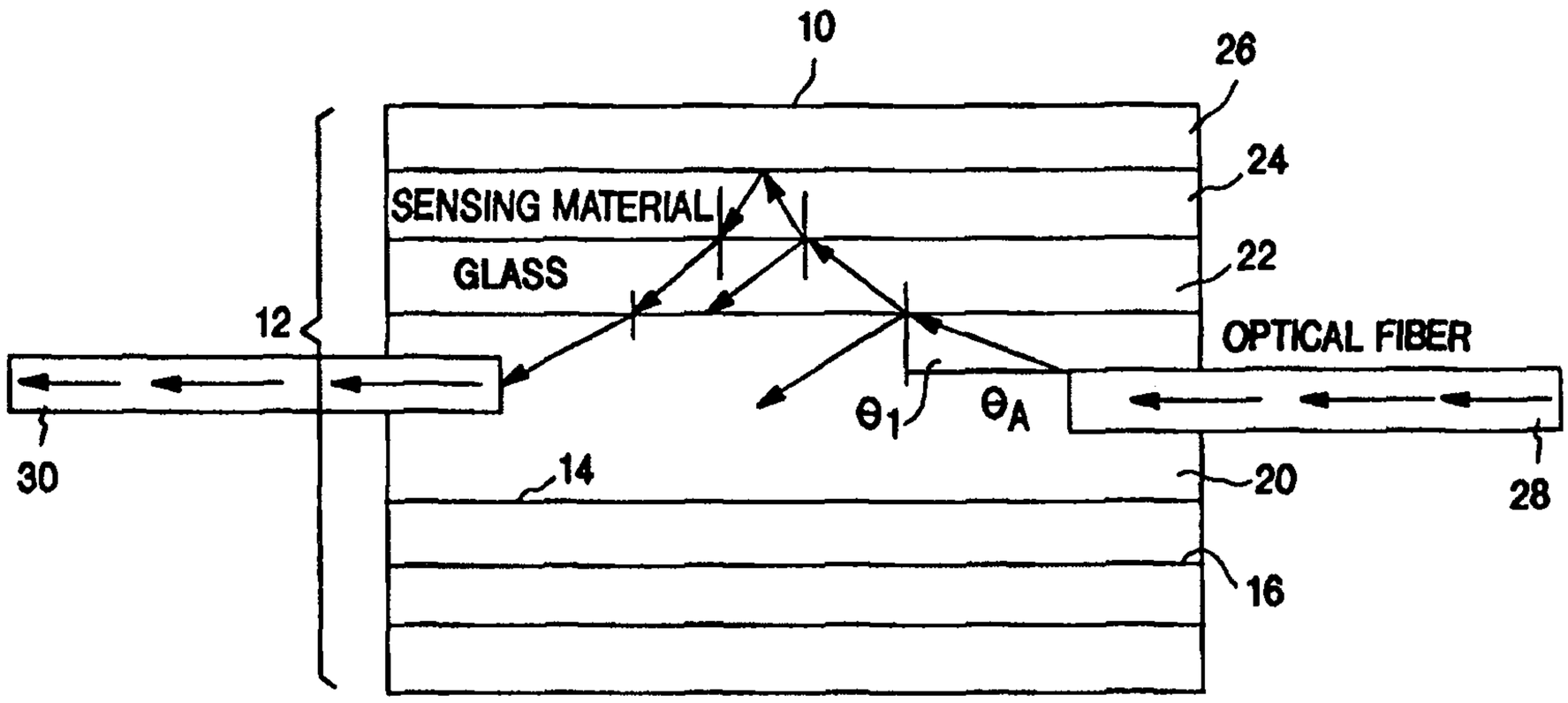

(57) Abstract

The optical waveguide sensor (10) is comprised of a housing (12) having an exterior (16) and an interior surface (14). The exterior surface (16) is coated with at least two layers, the first layer comprised of a low index of refraction material (24) and the second layer comprised of a highly reflective material (26). The housing is in communication with first (28) and second (30) optical fibers.

Title of the Invention

Active Strain Gages for Earthquake Damage Assessment

1. Field of the Invention

This invention relates generally to optical waveguide sensors and more specifically to temperature insensitive optical waveguide sensors which can monitor strain in excess of 2000 με.

2. Description of the Related Art

In some regions of countries, it is necessary to assess the condition of vital infrastructure elements (viz. roads, bridges and buildings under normal loading conditions *and* after catastrophic events such as earthquakes and floods. For example, state highway departments and construction companies could use such information to minimize repair cost, reduce service disruptions and avoid or detect catastrophic failures. Such data could also be used to alert emergency response teams to dangerous conditions within structures, provide warning of imminent structural failure and/or give detailed damage information for use in structural repair. Automated diagnostic monitoring systems could monitor the integrity of a structure and assess the damage with little human intervention through real time processing of the information.

Electrical strain gages, including resistive type strain gages and their equivalents such as piezoelectric, semiconductor, and capacitance gages, are fairly compact and highly accurate strain measuring devices. However, they have the disadvantage of rather small dynamic range and some hysteresis. Traditional electric resistance strain sensors have gage factors less than four. Environmental conditions such as moisture and temperature markedly affect the performance of resistance strain gages and thus, those gages need frequent calibration. If the baseline electrical resistance changes sufficiently due to environmental effects, the gage will not develop its stated calibration factor and measuring errors will be introduced. For traditional strain measurement methods, the problem of gage stability due to temperature changes can be reduced if the period of observation is kept short, otherwise the response must be considered to be a function of temperature (hence time) in addition to strain. Comparisons with traditional electrical resistance strain gages show that the optical methods are cost effective because of their high gage factors. There are also compatible with fiber optic communication systems and can be accessed from remote locations in a reliable manner.

Optical fiber based sensors have been applied to many of applications including

displacement (position), temperature, pressure, sound, and strain. In application, optical sensor data collection can generally be divided into two basic categories: phase-modulated and intensity-modulated. Intensity modulated sensors are usually associated with displacement or some other physical perturbation that interacts with the sensor. The perturbation causes a change in received light intensity and the intensity is related to the monitored parameter. Phase-modulated sensors compare the phase of light in a sensing path to the phase in a reference. Phase difference can be measured with extreme sensitivity, but frequently requires sophisticated electronics for signal processing. Also, phase modulated sensors have been used to measure temperature, thus they need to be calibrated for temperature when used in a strain application. Application of this type of optical sensor includes in situ monitoring of thin film deposition thickness. Phase-modulated sensors are generally more accurate than intensity-modulated sensors. However, they are usually more expensive and extremely sensitive to environmental effects, such as temperature.

The optical waveguide sensor of the invention overcomes the drawbacks of the aforementioned prior art strain gages

Brief Summary of the Invention

Broadly, the invention comprises an optical waveguide sensor, which comprises a housing having an interior and exterior surface. At least two layers are applied to the exterior surface of the housing. The first layer comprises a low refractive index material and the second layer comprises a highly reflective material. First and second optical fibers are in communication with the housing. A beam of light of known intensity is passed through the first optical fiber through the housing and received by the second optical fiber. The beam is attenuated according to how many 'bounces' or reflections it experiences as it passes through the housing which is determined by the conformation of the housing. The conformation of the housing is directly related to the bending strain that the housing experiences. Means for detecting the change in the intensity of the beam of light is in communication with the second optical fiber which allows for the monitoring of up to at least 2000 με.

In a preferred embodiment of the invention the optical waveguide sensor comprises a flexible, hollow, glass tube with an absorptive layer of polyimide deposited on the outside followed by the deposition of a layer of high optical reflection, such as aluminum. The parameter that is monitored is the intensity of the exiting light after the

beam has passed through the sensor tube. The beam is attenuated according to how many 'bounces' or reflections it experiences which in turn is a function of the radius of curvature of the hollow tube sensor. The radius of the curvature of the tube is directly related to the bending strain that the tube experiences and so applied strain can be inferred by monitoring the exit light beam intensity. The stability, ruggedness and simplicity of the present invention facilitate its use for remote sensing applications. Since optical fiber technology can be used to both send and receive the light signals, instantaneous strain can be monitored and relayed immediately or stored for later retrieval via a transmission link.

In another preferred embodiment of the invention the optical waveguide of the invention has a gage factor of about 500 for strains in excess of 2000 με. The housing is comprised of a hollow, glass wave-guide of dimensions of about 0.5 mm ID × 0.8 mm OD × 100 mm long.

The geometry of the housing of the optical waveguide sensor is compatible with standard telecommunications thereby facilitating the incorporation of the housing into smart system arrays for damage assessment in structures such as buildings, roads, and bridges. Optical fibers bring the excitation light signal to and the response signal from the housing. In a preferred embodiment, the housing is a glass tube having a small diameter. The small diameter glass tubes act as the substrate for multiple thin film layers that can be optimized to provide the maximum dynamic range for a predetermined strain excursion. The optical wave guide sensor of the invention which comprises a glass tube coated with the thin film layers responds to bending strain by attenuating the optical intensity of the excitation signal and exhibits little or no hysteresis.

The optical waveguide sensors of the invention have a large gage factor of about 500, and are temperature insensitive, i.e. the sensors do not respond to temperature changes over the normal range of outdoor temperatures (-20 to 50 ^{o}C), inexpensive to manufacture, not affected by electromagnetic fields, chemically inert to environmental conditions such as moisture and acid rain thereby making it possible to embed the sensors in a concrete structure with no fear of chemical reaction with the concrete and are readily interfaced with fiber optics communications equipment, i.e. the connection between the optical fibers and the sensing area can be hermetically sealed between the fiber and the capillary tube.

Brief Description of the Drawings

Fig. 1 is a schematic of an embodiment of the optical waveguide sensor of the invention.

Fig. 2 is a schematic of the layout used for testing an embodiment of the optical waveguide sensor.

Fig. 3 is a graph illustrating the strain response of optical waveguide sensors comprised of uncoated, aluminum coated, polyimide coated, and polyimide plus aluminum coated capillaries.

Fig. 4 is a graph illustrating the strain response of an optical waveguide sensor comprised of an ITO and aluminum coated capillary.

Fig. 5 is a table of gage factors for the various types of sensors shown in Figs. 3 and 4.

Description of the Preferred Embodiment(s)

Referring to Fig. 1, the optical waveguide sensor 10 of the invention is generally shown. A housing 12 has an interior surface 14 and an exterior surface 16. The exterior surface 16 is comprised of at least one layer of low index of refraction material 24 and at least one layer of highly reflective material 26. The housing 12 , and layers 28 and30 have very small coefficients of expansion, e.g. 9×10^{-6} in/in ^{O}C. The basic dimensions of the sensor 10 in the direction of strain do not change over the temperature ranges typically encountered environmentally. The housing 12 is in communication with a first optical fiber 28 and a second optical fiber 30. Means for detecting (not shown) the change in the intensity of light when light is passed through the housing 12, reflected and refracted within the housing 12 and received by the second optical fiber 30, is in communication with the second optical fiber 30.

In the preferred embodiment of the invention, the low index of refraction material of the first layer 24 is polyimide and the highly reflective material of the second layer 26 is aluminum.

EXPERIMENTAL

The invention comprises a robust waveguide strain sensor capable of monitoring strain of up to about at least 2000με. The active strain elements for the sensors comprise hollow glass tubes onto which thin film, optically active materials are deposited.

10cm long, hollow glass wave guides were obtained from commercial suppliers. The tube type sizes evaluated were; plain glass tubes, 5mm ID with 0.20mm wall thickness (Fisher Scientific, Pittsburgh PA) and ~16 - 35 μm polyimide coated glass

tubes with wall thickness, 0.09mm, 0.175mm, 0.1075mm and tube inside diameters of 0.32mm, 0.45mm, and 0.53mm respectively (Alltech Company, Deerfield, NY). The tubes were cleaned with a commercial ammonia based glass cleaner and then with acetone, methanol and deionized water rinses followed by blow drying in filtered nitrogen gas. Subsequent to cleaning they were placed in an ozone plasma chamber for two hours to remove any residual organic surface contaminants. Three different thin film coatings were evaluated for the optically sensitive layer; polyimide, indium tin oxide and zinc oxide in thicknesses of 0.1 to 40 μm. Other coatings believed suitable for purposes of the invention include silicon and germanium.

Polyimide coatings were 'standard' films provided by gas chromatography supply houses for column capillaries. The latter two materials were deposited by RF reactive sputtering. After applying the active coating, a reflective outer layer of aluminum (~0.5μm) was deposited, also by reactive sputtering. Other reflective layers believed to be suitable include silver, platinum, and palladium. The source and detector optical fibers were then epoxy bonded into either end of the tubes. The ends of the source and detector fibers 28 and 30 respectively were prepared, using standard industry techniques, to produce a flat surface normal to the fiber and sensor axis.

Referring to Fig. 2., the main components of the experimental apparatus were 1) a HeNe laser light source 40 emitting light energy in a range of 632 to 633 nm, 2) a microscope objective lens in a micro manipulator mount 42 to focus the laser light onto the source optical fiber 28, 3) a reference photodiode beam detector 44, 4)a sensing beam photodiode detectors 46, 5) a four point bending apparatus 48 with built in position sensing 50 and a comparator 52. Beam chopping and frequency sensitive amplification was used to stabilize the system against line power and laser fluctuations. About 4% of the laser light was directed to the reference diode detector 44 via a beam splitter 52 in the optical path. The reference signal was electronically divided into the sensor output signal to further reduce random noise. Commercial multimode optical fibers were used to bring the light source to the sensor input and carry the light exiting the sensor to the output detector. Strain was induced using the four point bending apparatus ASTM C-1341-97 with a programmable stepper motor. Typical step size was 0.25mm.

The relationship between strain and deflection for a rod or tube in four point bending is:

$$\varepsilon = \frac{\delta}{\delta^2 + \mathbf{a}^2}\mathbf{d} \qquad (1)$$

Where δ is deflection from equilibrium of the center of the tube, **d** is the outside diameter of the tube, and **a** is half the distance between the two movable (inner) pins of the four point bending rig (2a=2.92cm in this case).

Equation (1) gives a measurement of strain based on the geometry of the four-point bending device. The quantity δ can be measured directly or can be determined accurately by constructing a calibration curve of δ versus inner pin displacement. Over the range of bending necessary to attain 2000με, δ is linear with displacement and so can be directly inferred from the linear displacement of the inner pins.

RESULTS

The smart optical strain sensor employs a hollow glass waveguide support with the active sensing material located between the glass outer wall and the reflective (aluminum) over coating. The gage factor or response to strain was calculated as follows:

$$\mathbf{G} = \frac{\Delta \mathbf{I}}{\mathbf{I}_0} \bullet \frac{\mathbf{1}}{\Delta \varepsilon} \qquad \mathbf{(2)}$$

where $\Delta \mathbf{I}$ is the change in intensity as measured by the light detector diode at two strain levels, $\Delta \varepsilon$ is the change in strain, and $\mathbf{I_0}$ is the intensity in the unstrained condition. Since the intensity versus strain response was found to be essentially linear over the strain ranges tested, the gage factor was calculated by dividing the slope of the **I** versus ε curve by the **I**-axis intercept of the straight line that best fit the data. In practice the parameter measured is the output *voltage* of the amplifier used to measure the response, to intensity changes, of the sensor output detector diodes. That voltage was divided by the output of the reference diode amplifier and the ratio of the two voltages plotted as a function of strain.

When an ITO layer is added to the sensor construction, the gage factor is reduced but the range increases significantly. The particular structure, used for the response curve in Figure 4, was formed by sputtering 0.9μm of ITO followed by 0.5μm of aluminum onto the polyimide coated 0.53mmm ID tubes. The gage factor for that sensor configuration was 410. The change in signal when going from unstrained to 2000με was extrapolated to be 90% (reduction). This is in contrast to the typical 50% signal reduction observed over the same strain range for the various specimens without ITO

active layer (Figure 3). The associated gage factors for the configurations presented in Figures 3 and 4 are summarized in the table of Figure 5.

Cyclic straining of the sensor was done to test the reproducibility of the optical sensors. In four cycles from zero to maximum strain, for identical thin film structures fabricated on tubes of the same ID, the strain gages had reproducibility better than 1%.

DISCUSSION

The optical strain waveguide sensors are based on the loss of light that occurs when the laser beam hits the inner wall of the waveguide, traverses the wall (and any coatings thereon), reflects from the mirrored outer layer (aluminum) and traverses the coatings and wall of the waveguide once more. When light impinges upon the inner surface of the capillary, some is reflected, some is scattered (non-specular reflection) and some is transmitted (refracted) into the tube wall. These processes occur at each subsequent interface as well with an reflection/transmission ratio that depends, according to Fresnel and Snell Laws, upon indices of refraction of each material in the stack. In addition, each material *absorbs* some of the light in accordance with its individual absorptivity. So after one interaction event, the initial intensity, $\mathbf{I_0}$, is reduced to $\mathbf{I_1 = (1-f)I_0}$. Where '**f**' is the fractional loss for one interaction. If there are '**N**' interactions, then the final intensity is $\mathbf{I_N = (1-f)^N I_0}$. With the highly reflective coating in place on the outside, only absorption and scattering actually *reduce* the intensity of the light beam since reflection and refraction only affect the *phase* of the light waves as they arrive at some point in space.

As bending stresses are applied to the sensor, the curvature increases thereby increasing the number of 'bounces' or interactions between the light beam and the waveguide with associated losses for each bounce. The equation for the number of bounces, **N**, as function of radius of curvature, **R**, is given by (11):

$$N = \frac{1}{2} + \frac{\varepsilon L}{2d\cos^{-1}\left(\frac{1}{1+\varepsilon}\right)} \qquad (3)$$

And **d** is the outer diameter of the tube, ε is the strain and **L** is the gage length.

When an aluminum reflective layer is used as the outer coating little light can escape, thus the gage factor is reduced for that configuration. This is supported by the fact that the smallest gage factor occurred for the plain glass capillaries coated with an aluminum reflector. Almost all the light that is launched into the tube reaches the

detector fiber at the exit end. On the other hand plain glass, without any coatings at all, loses the most intensity on each bounce since light can escape the tube completely. So the totally uncoated configuration has the largest gage factor of all. A similar scenario applies to the polyimide coated capillaries with and without the reflecting outer coatings. One might conclude, therefore, that the 'best' sensor is the plain uncoated glass and this might be so for applications where the maximum strain is less than 1000με. (For instance, counting the traffic passage on a highway with optical sensors imbedded in the roadway would require sensors with responses optimized for something like 400με.) However, there are other considerations. First of all the plain glass tubes are not robust enough to reliably record 2000με without failure. If the walls were thinner they could withstand more bending but then they become too fragile to handle. The addition of the polyimide layer was an enhancement developed for the gas chromatography industry. The polyimide layer increased the flexibility of the capillaries permitting wall thickness reductions and much smaller bend radii without failure. As part of the evaluation, three sizes of polyimide coated tubes were tested.

It is believed a sensor which has an ID of 0.53±0.012 mm a wall thickness of 0.085±0.012mm and a polyimide layer 24±4μm thick. is a convenient match for the multi-mode fibers that are currently used. With this particular capillary, strain in excess of 5000με can easily be attained. Smaller, thinner walled polyimide coated capillary tubes are available should measurements at even higher strains be required.

The addition of absorptive layers and the tailoring of their thickness can be used to expand the dynamic range of the optical sensors design and end use, tailored for a specific dynamic range. Ideally the maximum strain should result in a reduction of intensity to a few percent of the initial value.

The waveguide sensor of the invention is a robust, chemically and thermally stable waveguide. The sensor can survive strain in excess of 2000με and is readily incorporated into optical fiber data collection systems. The optical properties of the active coatings on the sensor can be optimized to give the maximum dynamic range for a specific maximum strain criterion. Polyimide-coated capillaries can be strained at least to 5000με and are supplied with better tolerance control.

The foregoing description has been limited to a specific embodiment of the invention. It will be apparent, however, that variations and modifications can be made to the invention, with the attainment of some or all of the advantages of the invention.

Therefore, it is the object of the appended claims to cover all such variations and modifications as come within the true spirit and scope of the invention.

Having described my invention, what I now claim is:

1. An optical waveguide sensor comprising:

a housing, the housing having an interior and exterior surface, the exterior surface having at least two layers, the first layer comprised of a low index of refraction material and the second layer comprised of a highly reflective material;

a first optical fiber in communication with the housing;

a second optical fiber in communication with the housing; and

means for detecting the change in the intensity of light when light is passed through the housing, reflected and refracted within the housing and received by the second optical fiber, the optical wave guide sensor being capable of measuring up to at least 2000 με when the housing is stressed.

2. The optical waveguide sensor according to claim 1 wherein the housing has first and second opposed ends, the first optical fiber in communication with the first end and the second optical fiber in communication with the second end.

3. The optical waveguide sensor according to claim 1 wherein the first layer is comprised of polyimide.

4. The optical waveguide sensor according to claim 1 or 3 wherein the second layer is comprised of aluminum.

5. The optical waveguide sensor according to claim 1 wherein the first layer is selected from the group consisting of polyimide, silicon and germanium.

6. The optical waveguide sensor according to claim 1 or 5 wherein the second layer is selected from the group consisting of aluminum, silver, platinum and palladium.

7. The optical waveguide sensor according to claim 1 wherein the sensor is insensitive to temperatures in the range of about –20 to 50° C.

8. The otpical waveguide sensor according to claim 1 wherein the optical fibers are multimode.

9. The optical waveguide sensor according to claim 1 wherein the housing is comprised of glass.

10. The optical waveguide sensor according to claim 9 wherein the housing is

2 cylindrical.

1 11. The optical waveguide sensor according to claim 10 wherein the housing
2 has dimensions of 0.5mm inside diameter x 1mm outside diameter x 100mm long.

1 12. The optical waveguide sensor according to claim 11 wherein the optical
2 waveguide sensor has a gage factor of 490.

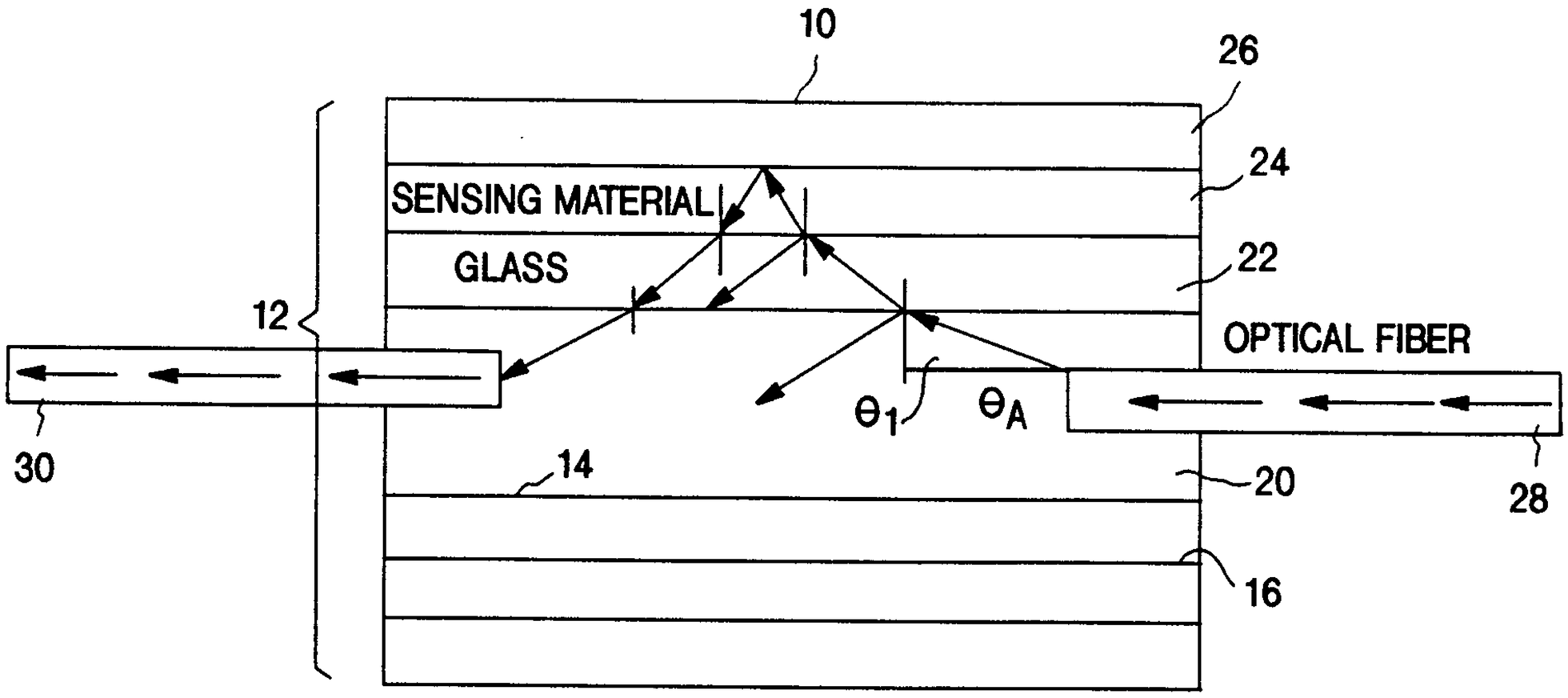
10
26
24
SENSING MATERIAL
GLASS
22
12
OPTICAL FIBER
θ_1
θ_A
30
14
20
28
16

FIG. 1

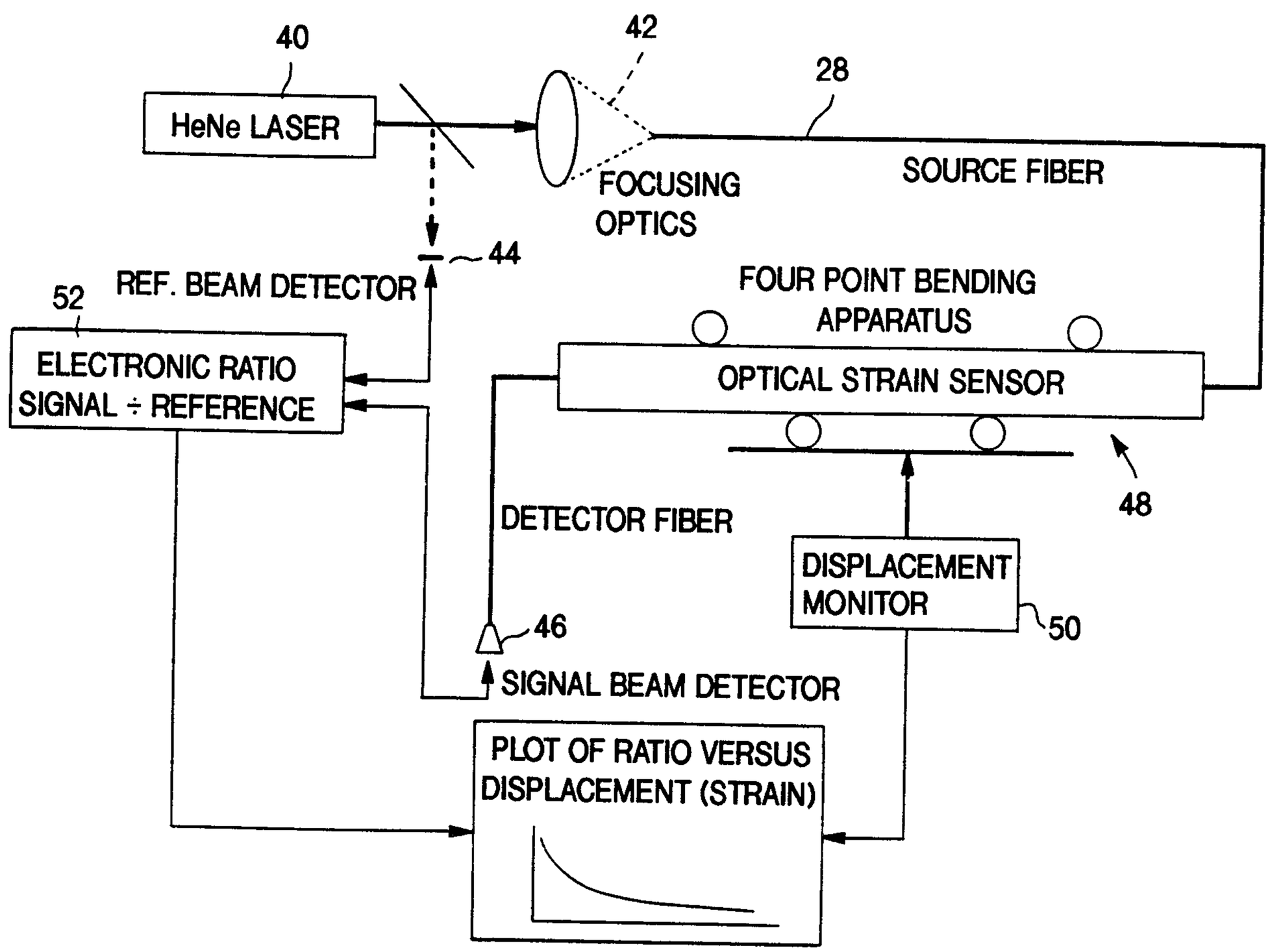
40
42
HeNe LASER
28
FOCUSING OPTICS
SOURCE FIBER
44
REF. BEAM DETECTOR
52
FOUR POINT BENDING APPARATUS
ELECTRONIC RATIO SIGNAL ÷ REFERENCE
OPTICAL STRAIN SENSOR
48
DETECTOR FIBER
DISPLACEMENT MONITOR
50
46
SIGNAL BEAM DETECTOR
PLOT OF RATIO VERSUS DISPLACEMENT (STRAIN)

FIG. 2

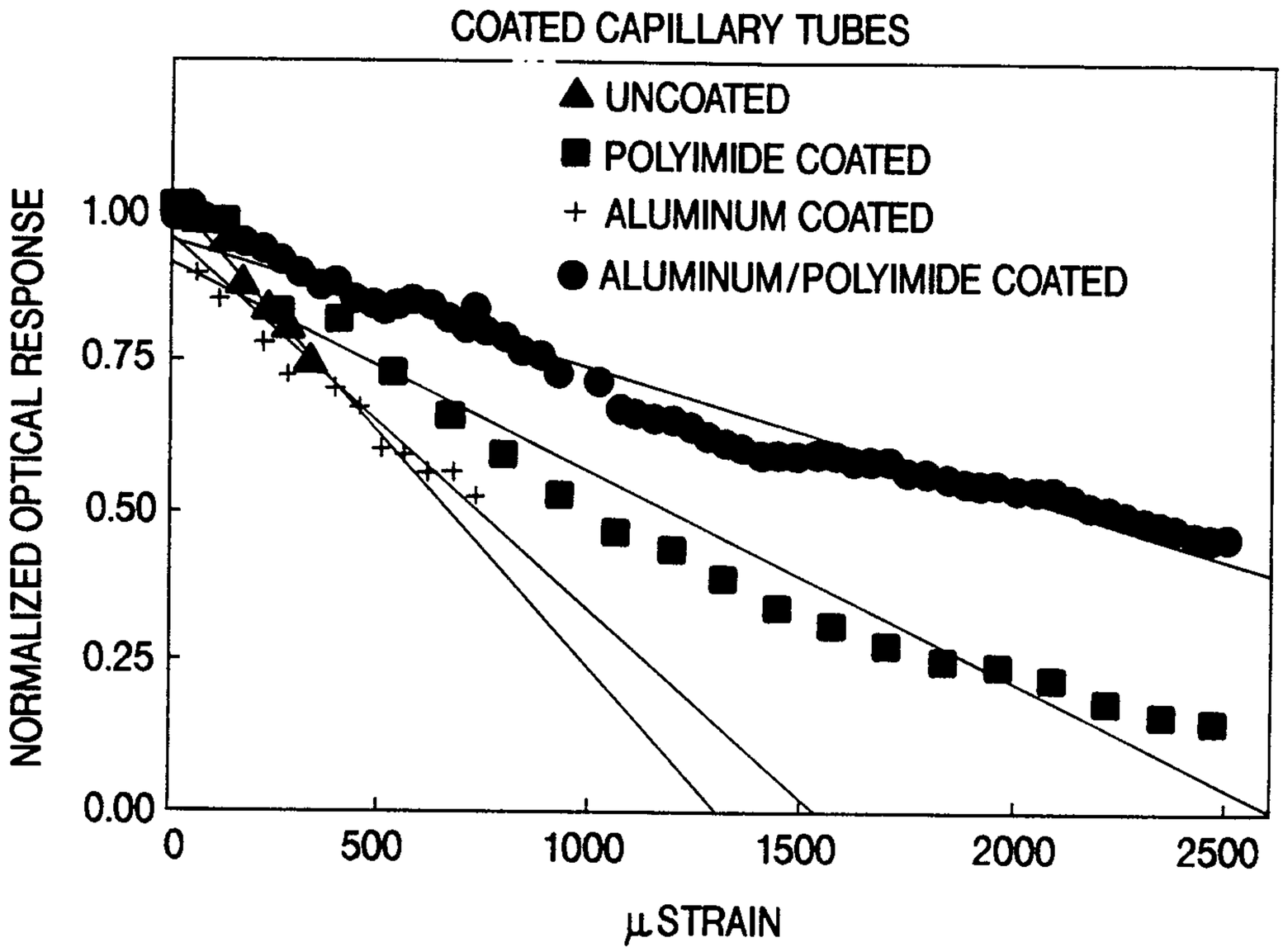
COATED CAPILLARY TUBES
▲ UNCOATED
■ POLYIMIDE COATED
+ ALUMINUM COATED
● ALUMINUM/POLYIMIDE COATED
NORMALIZED OPTICAL RESPONSE
1.00
0.75
0.50
0.25
0.00
0
500
1000
1500
2000
2500
μSTRAIN

FIG. 3

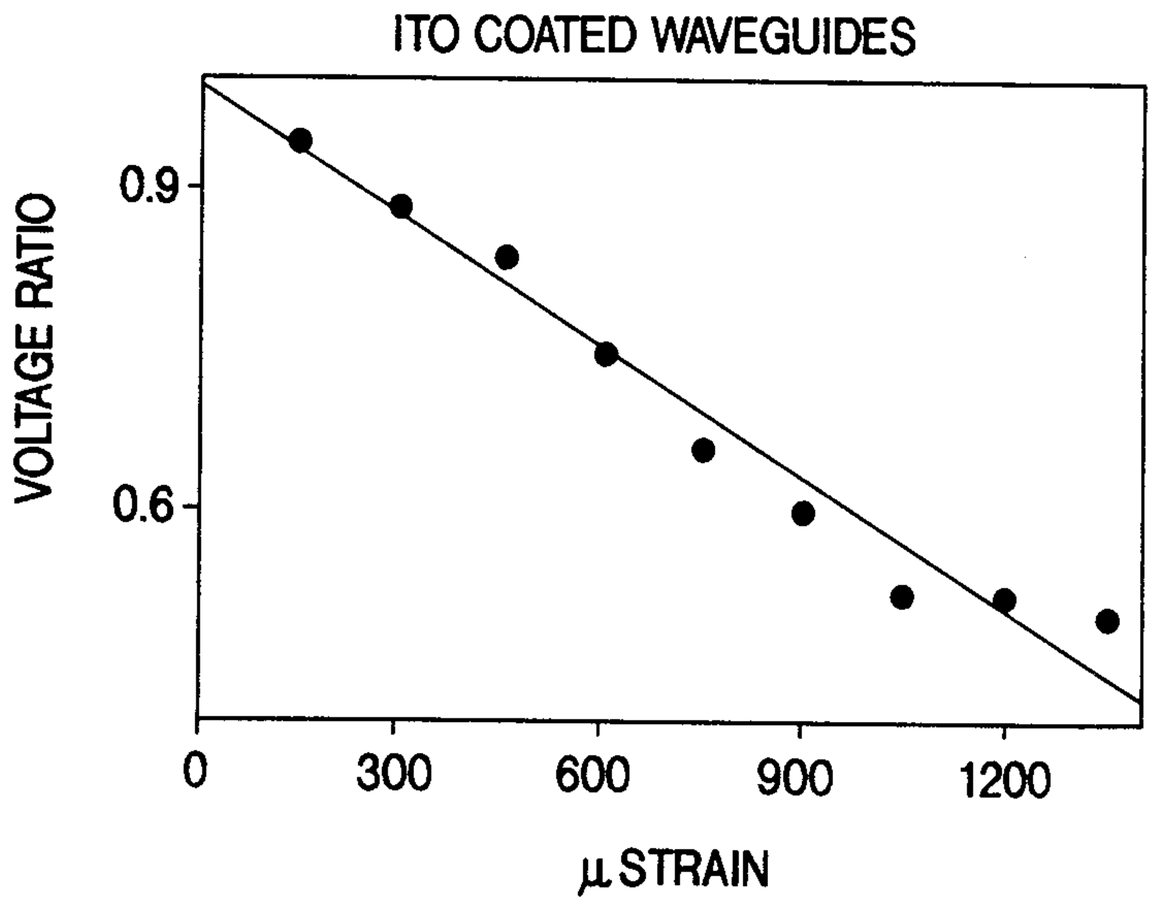
ITO COATED WAVEGUIDES
VOLTAGE RATIO
0.9
0.6
0
300
600
900
1200
μSTRAIN

FIG. 4

SENSOR	GAGE FACTOR
UNCOATED CAPILLARY	770
Al COATED CAPILLARY	650
POLYIMIDE COATED CAPILLARY	590
POLYIMIDE/Al COATED CAPILLARY	490
ITO/Al COATED CAPILLARY	410

FIG. 5

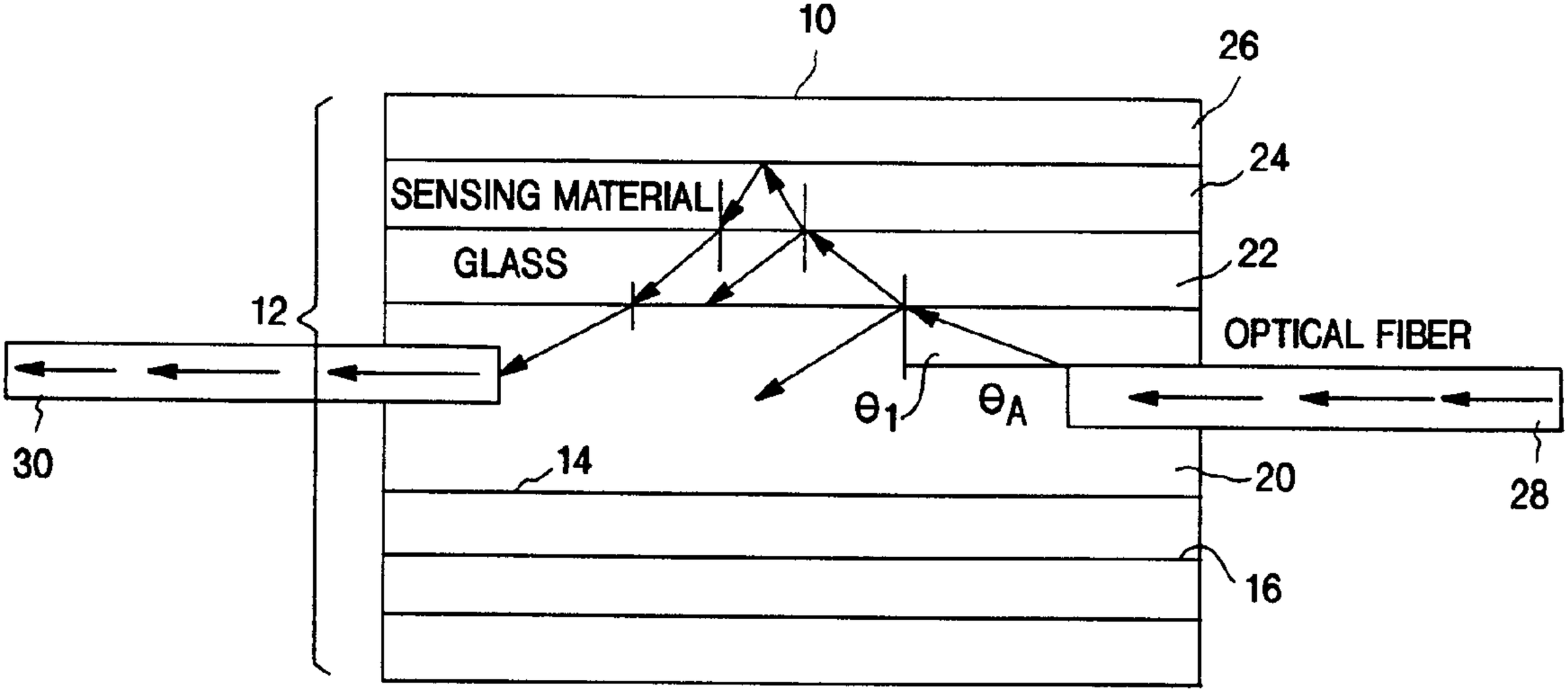
10
26
24
SENSING MATERIAL
GLASS
22
12
OPTICAL FIBER
θ_1
θ_A
30
14
20
28
16