June 20, 1967 F. W. WAHLIN 3,326,473

SPRAY NOZZLE

Filed Aug. 7, 1964 2 Sheets-Sheet 1

Fig. 3.

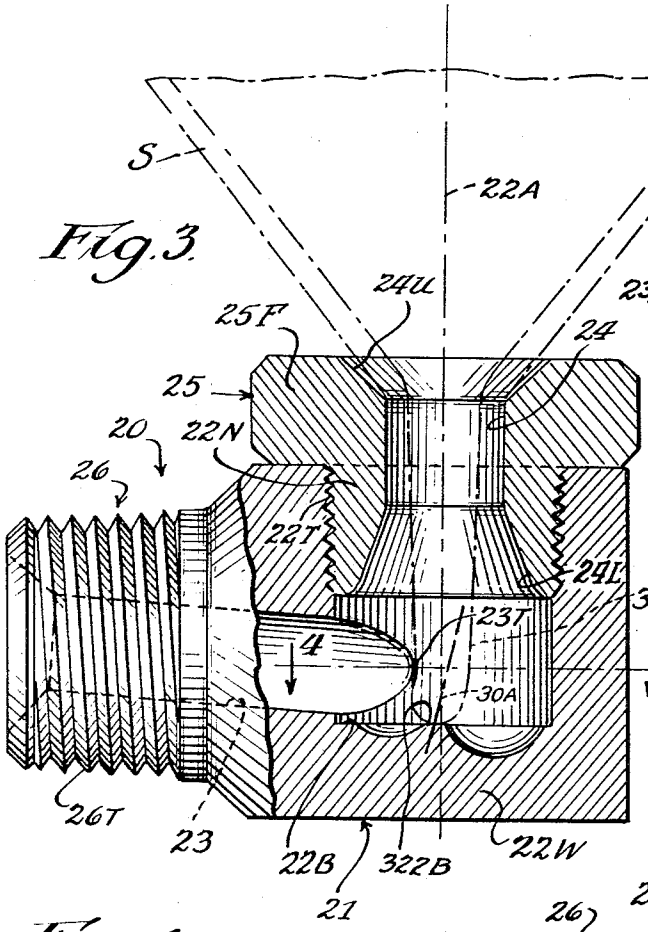

Fig. 4.

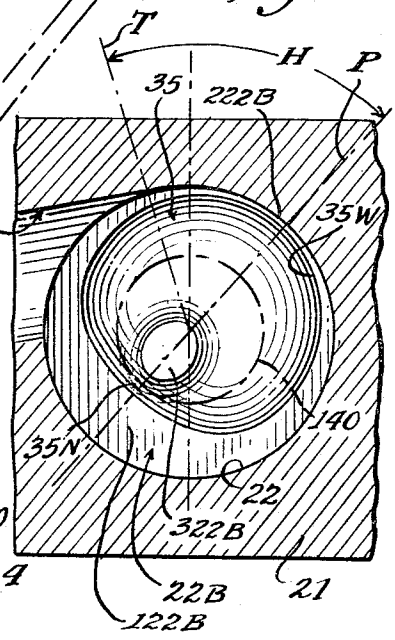

Fig. 1.

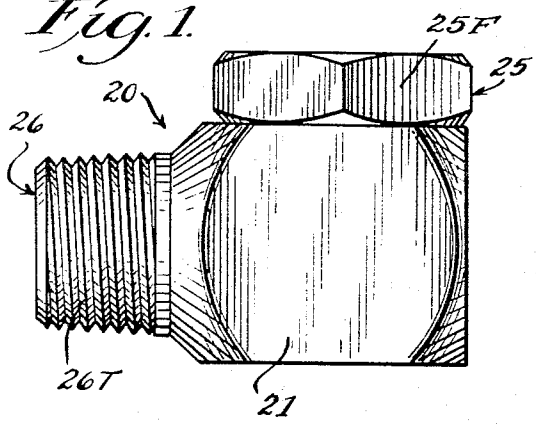

Fig. 2.

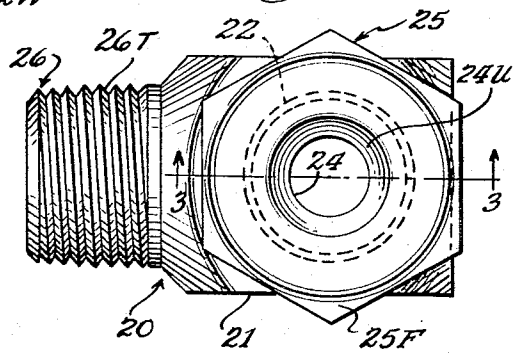

Inventor
Fred W. Wahlin

By Mann, Brown & McWilliams
Attys.

June 20, 1967 F. W. WAHLIN 3,326,473

SPRAY NOZZLE

Filed Aug. 7, 1964 2 Sheets-Sheet 2

Fig. 5.

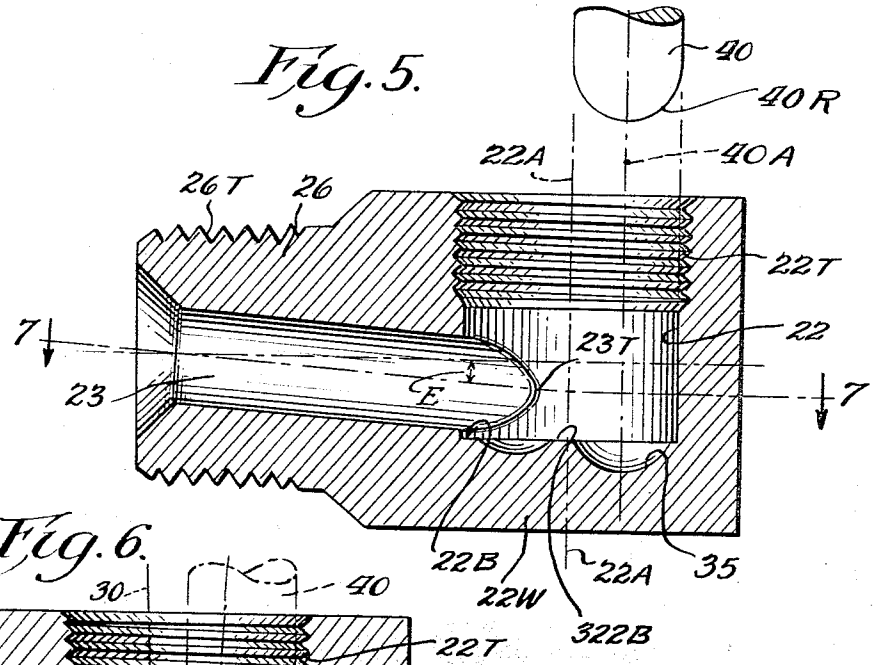

Fig. 6.

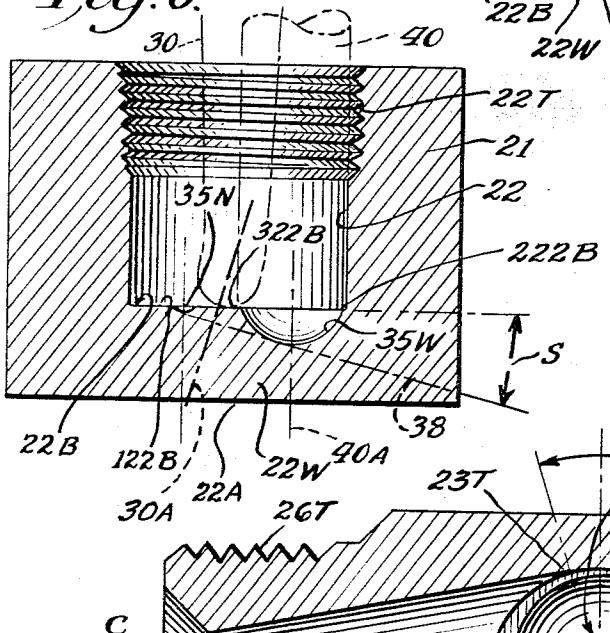

Fig. 7.

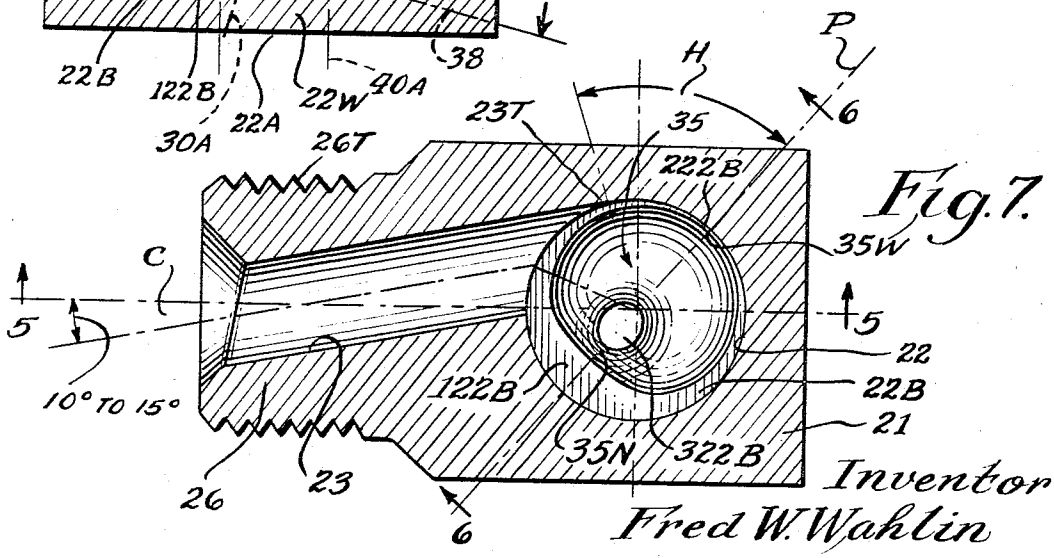

Inventor
Fred W. Wahlin
By Mann, Brown & McWilliams
Attys.

United States Patent Office 3,326,473
Patented June 20, 1967

3,326,473

SPRAY NOZZLE

Fred W. Wahlin, St. Charles, Ill., assignor to Spraying Systems Co., a corporation of Illinois

Filed Aug. 7, 1964, Ser. No. 388,138
6 Claims. (Cl. 239—468)

This invention relates to spray nozzles of the kind that produce a hollow cone spray, and particularly the invention relates to the whirl chamber of such spray nozzles.

In spray nozzles of the aforesaid character the circular spray orifice is formed as an axial outlet from one end of a generally cylindrical whirl chamber into which the water or other liquid is introduced as a tangential jet so that the water is given a high speed whirling movement within the whirl chamber, and this rapidly whirling water passes through the axial orifice and by reason of such whirling movement forms a hollow cone spray. In such whirling movement of the water, the whirlpool effect results in an elongated cavity or air column extending centrally through the spray orifice and downwardly within the swirl chamber and to or substantially to the opposite end or bottom wall of the whirl chamber.

It has long been understood that uniformity in the spray is dependent upon maintaining the whirling mass of water in a centered and axial relation to the discharge orifice, and it has been determined that when substantially the entire vertical length of the elongated central cavity or air column is coaxial with the orifice, the spray produced is uniform. It was found however that because of the unbalanced introduction of the water tangentially of the whirl chamber, there was a tendency of the water to whirl in an unbalanced relation wherein the lower end portion of the air cavity was shifted to one side away from the axis of the whirl chamber and the discharge orifice. This of course produced an unbalanced spray, and hence many different proposals have been made for controlling and correcting the whirling mass in the whirl chamber.

An early expedient adapted for this purpose is shown in Wahlin Patent No. 2,247,897, patented July 1, 1941, in which a central depression or pocket was formed in the bottom wall of the chamber. This was found to be quite effective for centering the lower end of the air cavity and producing uniformity in the spray, but it was discovered that there was a distinct wearing action that took place at the center of the depression or pocket so that a hole was often produced through the bottom wall of the whirl chamber. This excessive wear became so serious in many instances that removable bottom plugs, usually of a hard or wear resistant metal are provided for the whirl chambers of nozzles used where excessive wear is experienced.

Another expedient that was developed for centering the air pocket or cavity is disclosed in O'Brien Patent No. 2,815,248, patented Dec. 3, 1957, and this arrangement involved forming the bottom wall as a flat sloping surface. This flat sloping surface was formed by an end milling tool inserted at an angle into the threaded upper end of the whirl chamber and while the resulting structure was found to be satisfactory in those instances where the sloping flat surface could be produced, it was found that the dimensions of the whirl chamber usually were such that a sufficiently large slope angle could not be obtained. To obtain a sufficiently great slope angle at the bottom of the whirl chamber resort has been had to the use of a collapsible metal insert that was put in place as a hollow cylinder in the bottom of the whirl chamber and which was then crushed downwardly to provide the desired sloping bottom surface for the whirl chamber.

The several different structures that have been thus employed to center the whirling action of the water in

such nozzles have been considered to be objectionable from the standpoint of excessive wear or cost, and also because they did not adapt themselves to redesign of the whirl chambers to meet different combinations of factors such as size, capacity, water pressure and the like. It is therefore the primary object of the present invention to enable control means to be provided in a simple and inexpensive manner in the whirl chambers of spray nozzles.

Other objects related to the foregoing are to provide control means of the aforesaid character in such a way as to minimize wear, simplify the production of the control means, and provide the control means in such a form that its controlling action may be tested and modified in a simple manner to produce nozzle designs for specific combinations of controlling factors such as pressure size and the like.

Other and further objects of the present invention will be apparent from the following description and claims, and are illustrated in the accompanying drawings, which, by way of illustration show a preferred embodiment of the present invention and the principles thereof, and what is now considered to be the best mode in which to apply these principles. Other embodiments of the invention embodying the same or equivalent principles may be used and structural changes may be made as desired by those skilled in the art without departing from the invention.

In the drawings:

FIG. 1 is a side elevational view of a hollow cone spray nozzle embodying the features of the invention;

FIG. 2 is a plan view of the nozzle;

FIG. 3 is an enlarged vertical sectional view taken along the line 3—3 of FIG. 2;

FIG. 4 is an enlarged fragmental plan view taken along the line 4—4 of FIG. 3;

FIG. 5 is a vertical sectional view of the whirl chamber taken along the line 5—5 of FIG. 7;

FIG. 6 is another vertical sectional view taken along the line 5—5 of FIG. 7; and

FIG. 7 is a plan sectional view taken along the line 7—7 of FIG. 5.

For purposes of disclosure the invention is herein illustrated as embodied in a hollow cone spray nozzle **20** that comprises a main body **21** within which a cylindrical whirl chamber **22** is provided, and water or other liquid introduced as a high velocity jet tangentially into the chamber **22**, through a tangential inlet passage **23**, whirls within the chamber **22** and is discharged from the chamber **22** through a cylindrical axial orifice **24** provided in a spray tip **25** that forms the top wall of the whirl chamber **22**.

The main body **21** as herein shown has an integral nipple **26** extended from one side thereof, this nipple having external screw threads **26T** so that in this instance a male connection is provided, and the tangential inlet passage **23** that extends through the nipple **26** at an angle C of from 10 to 15 degrees to the vertical center plane of the nipple **26** as indicated in FIG. 7, so that the passage **23** enters the whirl chamber **22** in a tangential relation as shown in FIG. 4 and 7. As shown herein the passage **23** slopes downwardly at an angle E of about 4°, but it noted that in smaller capacity nozzles this angle may be reduced to zero.

The whirl chamber **22** is formed as a downward bore from the top of the body **21**, the lower end of the bore being milled flat to provide a main bottom surface **22B** for the whirl chamber **22** that is perpendicular to the axis of the bore that forms the chamber **22**, and this surface **22B** constitutes the main upper surface of a relatively thick bottom wall **22W** for the whirl chamber **22**. In its upper portion the bore that forms the whirl chamber **22** is internally screw threaded as at **22T** to receive a threaded

nipple 25N of the spray tip 25. The upper portion of the spray tip 25 is in the form of a flange 25F, which as shown is in the form of a hexagon nut so that the tip 25 may be tightened into place as shown in FIGS. 1 and 3.

The spray orifice 24 has a tapered concentric enlargement 24L at its lower end so that entry of the whirling liquid into the spray orifice 24 is facilitated, and in the present instance the upper or outer end of the orifice 24 also has a concentric tapered portion 24U. The taper of the surface 24U may be varied according to the spray angle desired. Thus when the whirling liquid moves outwardly through the orifice 24, it forms into a hollow cone spray S as indicated in FIG. 3. As the whirling liquid in the chamber 22 and in the orifice 24 is formed into the spray S, an air column or cavity 30 forms which extends from the center of the spray S inwardly through the center of the orifice 24 and downwardly through the whirl chamber 22 and to the bottom of the whirl chamber 22, as shown in FIG. 3 of the drawing.

When the air column or cavity 30 is concentric at its upper end and throughout substantially its entire length with the axis of the orifice 24, the spray S is uniform, but as pointed out herein above, control means must be provided in association with the lower portion of the whirl chamber 22 in order to maintain such concentricity of the major portion of the cavity 30 with respect to the axis of the orifice.

Under and in accordance with the present invention, controlling means are provided for the whirling liquid by what amounts to an improvement and simplification of the fundamental structures shown in the aforesaid O'Brien patent which discloses the provision of a flat sloping surface as the bottom of the whirl chamber. It was found that such flat sloping surface could not be produced in many instances, and under the present invention it has been discovered that a rather complex but easily formed surface contour in the bottom wall will attain the desired controlling action while at the same time presenting a rather thick wear resisting bottom wall area in the general region where excessive wear would normally take place.

The controlling contour that is herein illustrated in the upper surface 22B of the bottom wall 22W may be described generally as an annular groove 35 of arcuate cross section that varies gradually in width and depth from a narrow, shallow point 35N to a wide and deep point 35W, the points 35N and 35W being displaced 180° from each other, and the center line of the groove 35 being centered on the axis 22A of the whirl chamber 22. The groove 35, at its widest point has a width slightly less than the radius of the whirl chamber 22, as will be evident in FIGS. 4, 6 and 7, so that the edges of the groove 35 at this point are spaced slightly from the side wall and from the center of the chamber 22, and this spacing increases gradually about the chamber 22 so that at the narrow point 35N of the groove 35, the spacing from the side wall and from the center of the chamber 22 is relatively great. These characteristics of form or contour therefore provide a continuous shelf like area of gradually varying width about the outer side of the groove 35, the shelf area being the undisturbed portions of the bottom surface 22B, and providing a wide shelf area 122B opposite the narrow point 35N of the groove 35, and a narrow shelf area 222B opposite the wide point 35W of the groove 35. Further, a generally oval shelf area 322B is provided that is surrounded by the groove 35, the area 322B extending for a short distance beyond the axis 22A opposite the wide portion 35W of the groove 35, thus to include the axis 22A as will be evident in FIGS. 4, 6 and 7, and provide maximum thickness in the wall 22W where the wear tendency is the greatest.

The wide and narrow points 35W and 35N of the groove 35 are arranged in an axial plane P of the chamber 22, and this plane P is displaced in the direction of whirling movement by an angle H from an angle H from an axial plane T of the chamber that passes through the point 23T where the inlet 23 meets the wall of the chamber 22 in a tangential relation. In the specific nozzle 20 herein shown, where the whirl chamber 22 has a diameter of 5/16 inch, the inlet 23 diameter may be varied from about .111 inch to about .343 inch according to the desired discharge rate while the angle H that is used is approximately 52°.

The relative depths of the groove 35 at the wide and narrow points 35W and 35N have an important bearing on the extent of the corrective or controlling action of the groove 35, and in FIG. 6, a way of determining or establishing this relationship has been shown. Thus a line 38 extended through the deepest points or centers of the groove 35 at the narrow and wide points 35N and 35W defines a slope angle S with the bottom surface 22B of the whirl chamber 22, as shown in FIG. 6 of the drawings, and this angle S constitutes a measure of the severity of the correcting action caused by the groove 35. In the embodiment shown the slope angle S is about 17°, but in general it should be noted that the angle S increases as the diameter of the inlet 23 increases. Thus, for inlet diameters of .111 inch and .343 inch, the slope S may be about 4° and 21°, respectively.

In a nozzle 20, considered apart from the corrective action of the groove 35, the normal whirling action of the liquid tends to be unbalanced in such a way as to displace the lower end of the air column or cavity 30 to the left in the plane P as viewed in FIG. 7, and this tendency is overcome by the effective slope of the groove 35 from its narrow, shallow points 35N to its wider, deeper point 35W, and the slope angle S, above described provides a measure of this corrective action. Thus, where an inlet 23 of a relatively small diameter is used, a corrective slope of about 4° is used, and for larger diameter inlets, the angle may be increased gradually up to about 21° so as to attain an increased corrective action.

In designing a specific nozzle which will take into account the various dimensional and positional relationships in the structure as well as the different combinations of liquid pressure, capacity and the like, the final attainment of a properly balanced spray pattern usually involves the production and successive testing of a series of nozzles, and the corrective contour that is provided by the groove 35 under the present invention has been found to facilitate the design process to a marked and unexpected extent, as will be explained in connection with the description of the method of producing the nozzle 20. The body 10, with the whirl chamber 22, the threads 22T, the threaded nipple 26 and the passage 23 are formed in the usual way, and the groove 35 is formed by the use of an end milling tool 40, FIGS. 5 and 6, which has a rounded or semispherical lower milling surface 40R. The milling tool 40 has a diameter that is not more than one-half the diameter of the whirl chamber 22, and in the present instance the diameter of the tool 40 is exactly equal to one-half the chamber diameter and the surface 40R has the same diameter as the milling tool. In forming the groove 35, the axis 40A is disposed parallel to the axis 22A of the chamber 22 with the side edge of the tool 40 engaged with the side of the chamber 22 as shown in FIG. 6, and the tool 40 and the body 21 moved relative to each other about the axis 22A of the chamber 22 so that the axis 40A of the tool in effect traverses the line 140, FIG. 4, which constitutes the center line of the groove 35. The depth and width of the groove 35 is controlled during such relative movement of the tool 40 and body 21 by relatively moving the tool 40 and the body parallel to the axis 22A.

To accomplish the aforesaid relative movements to produce the groove 35, the body 21 may be clamped in a work fixture that is rotatable about the axis 22A of the body 21, and with the axis 40A of the tool 40 so related that when the work fixture is rotated about the axis 22A of the clamped body 21, the axis 40A of the tool 40 will in

effect traverse the center line **140** of the groove **35** that is to be milled in the bottom wall **22W** of the body **21**. As such rotation of the body **21** takes place the work fixture and the body **21** may be moved toward and away from the tool **40** in accordance with the rotative position of the body **21**. Thus cam means in the form of a cam plate, tilted at the desired slope angle S with respect to the axis **22A**, and disposed with its cam surface perpendicular to the plane P, may act on the fixture to move the body **21** toward and away from the tool **40**, thus to vary the width and depth of the groove **35** as required to produce the desired corrective action. The groove **35** may thus be formed at any selected slope angle S, and with the plane P in the desired location wth respect to the inlet passage **23**.

In practice when a nozzle design is being perfected the necessary corrections may usually be made by changing the effective slope angle S, and because the groove **35** may be formed by a tool **40** with its axis **40A** parallel to the axis **22A** of the whirl chamber **22**, the required changes in the slope angle S are independent of the depth-diameter relation of the whirl chamber **22**. Hence the principles of the present invention find wide application in the production of nozzles such as the nozzle **20**.

In the operation of nozzles **20** embodying the invention, substantially the entire vertical length of the air cavity **30** is maintained concentric with the axis of the orifice **24** so that a uniform hollow cone spray is produced. It is found however that at its lower end the air cavity **30** is curved slightly in the plane P so as to be centered on an axis **30A**, FIG. 6. The extreme lower end of the air cavity is thus located above the flat surface **322B** where the full bottom wall thickness is presented to withstand wear, and yet, in the event that the bottom of the air cavity **30** is displaced to the right, FIG. 7, from the center of the whirl chamber, the cavity will be opposite a steeply sloping surface of the groove **35** so that the wearing action associated with the air cavity **30** will be minimized.

From the foregoing description it will be apparent that the present invention simplifies the provision of whirl control means in spray nozzles, simplifies the design and manufacture of such nozzles, reduces wear in the whirl chambers of such nozzles, and enables control means to be provided in such nozzles with the minimum of cost.

Thus while a preferred embodiment of the invention has been illustrated it is to be understood that changes and variations may be made by those skilled in the art without departing from the spirit and scope of the appended claims.

I claim:

1. In a spray nozzle for producing a hollow conical spray and having a body with a circular whirl chamber therein defined by a circular side wall and a bottom wall, the body having an inlet passage opening tangentially into said circular chamber, and a nozzle tip closing the top of said chamber and having a spray discharge orifice therein

disposed axially of the chamber, the improvement which comprises whirl-correcting means formed as an annular groove of arcuate cross section in said bottom wall and centered on said axis and varying uniformly in width and depth, the bottom of said groove lying in a plane disposed transversely to said axis and at an angle with respect thereto.

2. The apparatus as set forth in claim **1** wherein the widest and deepest place of said groove coincide, and the narrowest and shallowest place likewise coincide, and the width of said groove varies uniformly between said points.

3. The apparatus as set forth in claim **1** wherein said annular groove is cut to depth which varies from a minimum to a maximum, such that the points of minimum and maximum depth lie 180° on a line which forms an acute angle with the axis of said orifice.

4. Apparatus as set forth in claim **3** wherein said inlet passage is located at a tangent to said circular chamber and disposed above said annular groove.

5. Apparatus as set forth in claim **4** wherein said inlet is positioned so as to direct fluid toward that portion of said chamber wherein said annular ring has its place of maximum depth and width.

6. A spray nozzle of the type having a body portion defining a central whirl chamber, and having an inlet passage tangent to and opening into said whirl chamber, said whirl chamber being co-axial with a spray orifice, a whirl-correcting groove formed in the flat bottom of said chamber, said groove being annular and having an outside diameter less than the diameter of said chamber so as to leave a portion of said bottom wall as a shelf about said groove, and defining a wear-resisting shelf surrounded by said groove, said groove being cut to a depth which varies gradually from a point of minimum depth disposed behind said inlet passage to a point of maximum depth, said points of minimum and maximum depth lying on a straight line in a plane disposed transversely to the axis of said whirl chamber and sloping away from said inlet passage.

References Cited

UNITED STATES PATENTS

1,938,000	12/1933	Wahlin	239—468
2,815,248	12/1957	O'Brien	239—468
3,107,859	10/1963	Gilson	239—468
3,182,916	5/1965	Schulz	239—468
3,196,748	7/1965	Apthorp	90—11.42
3,209,652	10/1965	Burgsmueller	90—11.42

FOREIGN PATENTS

212,636	2/1958	Australia.
1,079,441	5/1954	France.

M. HENSON WOOD, JR., *Primary Examiner.*

R. S. STROBEL, *Assistant Examiner.*