PATENT SPECIFICATION (11) 1 583 594

1 583 594

(21) Application No. 30418/77 (22) Filed 20 July 1977 (19)
(31) Convention Application No. 9529 (32) Filed 20 July 1976 in
(33) Italy (IT)
(44) Complete Specification published 28 Jan. 1981
(51) INT. CL.³ D04B 15/66
(52) Index at acceptance
D1C 1A5 1H10B 1H14C 1H14D 1H14G 1H16B 1H17D 1H17F 1H2D 1H2E 1H3F 1H8B 1H9E

(54) IMPROVEMENTS IN OR RELATING TO KNITTING MACHINES

(71) We, BREMATEX S.p.A., an Italian Body Corporate, of Via dell'Aiale 3, Prato, Firenze, Italy, do hereby declare the invention, for which we pray that a patent may be granted to us, and the method by which it is to be performed, to be particularly described in and by the following statement:—

The present invention relates to a circular knitting machine, for example for knitting stockings.

According to the present invention, there is provided a circular knitting machine comprising a rotary unit including a needle cylinder and cams, a program-cam drum coaxial with and underlying the needle cylinder, cam followers cooperating with the cams of the rotary unit, driving pawl means actuated by the cam followers and engageable with ratchet gear means rotatable with the drum, whereby actuation of the pawl means effects advance of the drum, and program-controlled means for rendering the followers temporarily inoperative.

Further according to the present invention, there is provided a circular knitting machine comprising a needle cylinder, drive means actuable to drive the drum, said drive means comprising cams rotatable in synchronism with the needle cylinder, cam followers cooperating with the cams, and driving pawls driven by the cam followers and engageable with ratchet gear means fast for rotation with the drum such that actuation of the pawls effects advance of the drum, and program-controlled means for rendering said drive means temporarily inoperative.

The program-controlled means for rendering the drive of the drum selectively inoperative may be a mechanical device or an electromagnetic device operative to maintain the followers removed from the cams.

An embodiment of the invention will now be described, by way of example only, with reference to the accompanying diagrammatic drawings, in which:

Figure 1 is an overall perspective view showing the main control components of a circular knitting machine;

Figure 2 is a side elevation, partly in section, corresponding to Figure 1;

Figures 3A, 3B and 4 are sections respectively on lines IIIA—IIIA, IIIB—IIIB, and IV—IV of Figure 2;

Figure 5 is a section taken on line V—V of Figure 2;

Figures 6, 7, 8, 9 and 10 are fragmentary perspective views showing a yarn feed, Figures 7, 8, 9 and 10 being sections taken respectively on lines VII—VII, VIII—VIII, IX—IX, and X—X of Figure 6;

Figures 11 and 12 are respectively a developed view from the outside, and a plan view, in the zone of a yarn feed;

Figures 13 to 24 are sections respectively on lines XIII—XIII to XXIV—XXIV of Figure 12;

Figure 25 is a plan view of a thread guide unit connected to a yarn feed with the associated selection members;

Figure 26 is a section taken on line XXVI—XXVI of Figure 25;

Figure 27 is a side elevation, partly in section, of a thread-cutter device, the device being shown in an operable condition;

Figures 28 and 29 are sections taken respectively on lines XXVIII—XXVIII and XXIX—XXIX of Figure 27;

Figure 30 is a section similar to Figure 29, but showing the device in an inoperable condition in which it is raised to enable access to the upper end of the needle cylinder; and

Figure 31 is an elevation similar to Figure 27 but showing the device in its raised, inoperable, condition.

In the accompanying drawings, 1 generally denotes a main supporting frame for the needle cylinder 3 of the machine. In Figure 1 most of the frame 1 is omitted for clarity sake. An annular element 7 is supported on the frame by means of columns 5, the annular element 7 surrounding the upper end portion of the needle cylinder.

The needle cylinder 3 is axially slidable on, but fast for rotation with, a tubular shaft 9 which is mounted on the frame 1 by means of radial bearings 10 and 12. These bearings are mounted on the shaft 9 and are spaced axially by a tubular spacer 14. A pulley 16 for a drive belt 18 is fast on the shaft 9.

The cylinder 3 bears via an axial bearing 20 on small diametrally opposed balls 22 carried by a ring 24 (also see Figure 5). The ring 24 is pivoted to the frame 1 by a ball joint 26 located on a diameter perpendicular to that on which the small balls 22 are located, and the ring has an extension 24A diametrically opposite the ball joint 26. The ring 24 is moved by its extension 24A in a manner to be described, to vary the axial position of the cylinder and thereby the loop length.

A ring 28 is provided at the upper end of the needle cylinder 3 for sinkers 30, cam means being provided on a smaller ring 32, mounted in an angularly fixed position and axially movable with the cylinder 3.

A program cam drum 34 is mounted on a stepped portion 1B of the frame 1. The drum 34 lies outside of, and below, the needle cylinder 3 but is coaxial therewith and can slowly rotate about an axis coincident with that of the cylinder 3, but independently of the needle cylinder rotation control systems. The drum 34 has a wide outer annular groove defined between flanges 34A, 34B and designed to accommodate a series of radial cams, which are in the form of a stack of plates located within said groove between the flanges 34A and 34B.

In particular, the cams may consist of packs of cams 36 in the form of annular sectors, held together by a removable pin 38 within the annular groove. Each pack of cams 36 is locked within the annular groove by means of a pair of screws 39 which pass through the upper flange 34A and are screwed, for instance, to the lower flange 34B. By this arrangement, the cams 36 can be easily mounted in the drum and removed therefrom by moving the drum to a given accessible position, by removing the screws 39 to permit removal of the existing pack of cams 36, which are replaced by a new pack of cams arranged according to the desired pattern and which is locked in position by replacing the screws 39. In the groove between the flanges 34A and 34B a series of cams can be mounted which are aligned sector by sector to define annular cam tracks for the hereinafter indicated controls.

The drum 34 is driven slowly by a ratchet and pawl drive which effects, during a working cycle of the machine, advancement or stoppage of the drum 34, according to a program which supplies electric advancement and stoppage signals.

The drive comprises two annular gears 40 and 42 mounted on the drum 34 and having ratchet teeth, the teeth of the gear 40 having a much smaller pitch than those of the gear 42. The machine program provides for one full revolution of the drum 34 for each article produced. Three cams 44, 46, 48 are mounted below the needle cylinder on the tubular spacer 14 so as to rotate with the needle cylinder and the shaft 9. The cams 44 and 48 each act on a roller 50A of a respective follower 50, which is mounted on a shaft 52 parallel to the axis of the needle cylinder. At the upper end, each of the two shafts 52 carries an arm 54, a pawl 56 being linked to the outer end thereof and being biased resiliently against the teeth of the gear 42. The two pawls 56 and the associated actuation cams are in such mutual relationship that at each half-revolution of the needle cylinder two successive advance movements are imparted to the gear 42 and thus to the drum, to obtain an averagely uniform motion. A similar arrangement including a follower 57 cooperates with the cam 46 to determine the actuation of a shaft 58, similar to the shaft 52, for an arm 60 actuating a pawl 62 designed to act on the gear 40 to provide for very slow movement of the drum 34.

The movements of the cam drum caused by the pawls 56 serve to obtain movements of the members cooperating with the needle cylinder. The slow movement obtained with the pawl 62 serves to vary the axial position of the needle cylinder and thus to vary the length of the instantaneously formed loops. The variation in the loop length must occur very slowly and it is for this reason that the gear 40 having small pitch teeth is used.

In order to determine this axial movement of the needle cylinder for the above indicated purpose, the lower annular cam tracks in the cam drum 34 cooperate with follwer pins 64A carried by an arm 64 rigid with a shaft 66, which is mounted on the frame 1 parallel to the axis of the needle cylinder. The pins 64A of the arm 64 are located on different levels to cooperate with cams of successive superimposed tracks, in the several positions which are reached by the cam drum 34 during one cycle. The shaft 66 carries an arm 68, which is provided at its end with an inclined plane profile 58A (i.e. a ramp) which can act on a follower 70 slidable in the frame 1 parallel to the axis of the needle cylinder, to act on the extension 24A of the above described ring. 24. Small angular movements of the unit 64, 66, 68 cause a slight axial movement of the follower 70 and thus a raising or lowering of the ring 24 about the ball joint 26, this determines an axial movement of the needle cylinder through the ball bearings 22. Figure 1 shows a cam 72 of the drum 34 which has a very shallow profile and acts thereby in a very gradual manner on the follower 64A and associated components to effect the slow movement of the needle cylinder in the axial direction, and thereby the slow variation of the loop length. According to the particular profile of the cams acting on the follower

64A, increasing or decreasing changes in the loop length can be effected.

The other cams 36 assembled on the drum 34 effect control of cams acting on the needle and/or jack butts of the needle cylinder, yarn picking, yarn releasing and other operations which are conventional in the operation of circular knitting machines.

For the control of radially movable cams and their action on jack and/or needle butts, there are provided followers 74, each associated with a different cam track on the drum 34. Each follower 74 is mounted on a shaft 76 parallel to the axis of the needle cylinder and movable on the frame 1. Each shaft 76 carries, in a suitable position above the level of the bearing 20, an arm 77 designed to act, through a link member 78, on a slide 80, which is radially movable, to effect the exclusion of a radially movable cam 81 of the usual cam shell arranged around the cylinder 3. This movement of the cam 81 is against the action of springs which tend to insert the cam. The different cam tracks enable the extraction, the partial insertion, the total insertion or the insertion at different levels of the radially movable cams 81.

Others of the cam tracks act on followers 82 carried by arms 83. The arms 83 are pivoted to act on radial extensions 85A of angularly movable cams 85. The followers and associated components are arranged at different positions around the circumference of the needle cylinder, to control the angularly movable cams in the different positions in which they are located.

Arrangements similar to those described serve to operate the thread-guides. Followers 88 similar to the followers 74 are mounted on shafts 90 similar to the shafts 76 and extend to the annular element 7 to operate forks 92 for the hereinafter indicated purposes. In the embodiment shown, there are two such forks 92, substantially diametrally opposed. A housing is formed on the annular element 7 for two rings 94 and 96 mounted one within the other and angularly movable around their centre which is located on the axis of the needle cylinder, the movement of the rings being effected by the two forks 92. One of these forks engages a pin 96A of the inner ring 96 and the other one of the forks engages a pin 94A of the outer ring 94. In this embodiment there are four yarn feeds around the needle cylinder and on each of the two rings 94 and 96 there are provided at each of four yarn feeds, corresponding cam profiles generally denoted by 98.

In correspondence of each feed there is provided on the ring 7 a support 100, on which a plurality of levers are articulated, preferably about a common axis 102. The levers extend radially inwardly towards the needle cylinder 3. For each feed some of the levers, 104, form thread-guides 104A, while at least another one of the levers 106, serves to carry a plate 108 for guiding and protecting the latches 110 of the needles 112 of the needle cylinder 3. In order to act on the levers 104 and 106 there are provided follower pins 114 guided on the support 100 and raisable by means of the cam profiles 98, to lift the levers 104 and 106 against the counteraction of springs 116 acting on the outer ends of the levers. The springs 116 bias each of the levers 104 and 106 into its active position and thereby the thread-guides 104A and the guard plates 108, the active position being defined by the corresponding feed bearing either on the pins 114 or on the support 100 of the corresponding feed.

Through the control provided by the followers 88 and the forks 92, there is effected an independent positioning of the two rings 94 and 96 and thereby the desired selection of the thread-guides as a function of the positioning of the raising and lowering cam profiles 98. One of the two forks 92 has a lever 92A for hand operation. This fork, which is designed for the control of the outer ring 94, also has one of its two arms 92B (see Figure 4) longer than the other, so that this fork cam operate both rings 94 and 96, owing to the presence of a pin 118 on the ring 96, in such a manner as to determine manually the simultaneous movement of both rings 94 and 96. This simultaneous control serves to effect full raising of all the levers 104 and 106 and of the guard plates 108, when it is necessary to gain access to the upper section of the needle cylinder, as is often required in the use of the machine.

Through the control systems operated by the cam tracks of the drum 34, there is thus obtained the control of the cams of the cam shell—such as the cams 81 and 85—acting on the needle and jack butts, and of the thread-guides as well as the exclusion of all the thread-guides and the plates 108 from the working zone of the needles, at the upper end of the cylinder. There is also obtained, by the cams 72 acting on the followers 74A, a variation in the loop length during certain working stages of an article on the machine.

An appropriate program determines the angular advance of the drum 34, and thereby the stages at which the cams of the cam shell and the thread-guides are switched and the axial position of the needle cylinder is changed to vary the loop length. In order to allow the variation in the loop length to be effected gradually with only a limited angular zone required for this operation, there is provided the small-pitch advance system with the annular gear 40 having very close teeth. To advance the drum 34 to switch the thread-guides and the cams of the

shell, provision is made for the larger movements using the annular gear 42. In any case, the jack advance movement operated for each revolution of the needle cylinder is selectively obtained for some of the program stages during the manufacturing cycle of an article, while for other periods in the cycle the drum 34 is kept stationary, as no switching is required.

In order to exclude the drum 34 from the advance movement, while fast rotation of the needle cylinder is maintained, the driving pawls 56 and 62 can be rendered selectively inoperative by raising the associated followers 50 and 57 from the cams 44, 48 and 46, so as to interrupt the oscillating movements of the followers and thus the advance of the drum. For this purpose, electromagnetically operated exclusion devices 122 are provided for all the followers 50 and 57. These electromagnetic exclusion devices are arranged to act on respective keepers 124 carried by each of the followers which approach pole pieces of the magnets during outwardly directed movement of the respective followers. The keepers 124 are either retained, or not retained, by the associated devices 122 according to the energization conditions thereof. For a fail-safe operation (in the event of a power failure), the electromagnetic devices 122 operate to retain the keepers 124 and thus the respective followers by the action of a permanent magnet, whose action is neutralized by the energization of a winding, which in this way—when energized—allows the normal operation of the follower, while in absence of power, the follower 50 is attracted and thus its operation is interrupted.

A suitable program effects the actuation of the long-pitch or short-pitch advance systems according to the requirements of the working cycle of an article. In this way, the periphery of the drum 34 is of sufficient size to provide the working program for a working cycle of an article, such as a stocking. The program which controls the electromagnetic exclusion devices, may be of the electrical type, for example determined by a punched tape or of the mechanical type, for instance of the chain-type.

Figures 6 to 24 show for one feed, the operation of the guard plate 108 and the manner in which a yarn F is fed directly to the needles without contacting any other member of the respective feed.

During the raising of the needles 112 to reach the level of thread-guide 104A, a latch opener 126 acts on the latches 110 of the needles being raised effect their opening. This results in the latches being already open and being below the plate 108, when the needles reach the edge thereof. The inner edge of the plate 108 prevents the latches 110 from being accidentally raised and closing the end hooks of the needles which are to pick the yarn up. The position of the thread-guide 104A with respect to the plate 108 and to the trajectory of the needles is such (see Figures 7 to 10 and 12 to 24), that the guide in practice does not touch either the inner edge of the plate 108 or any other element associated with the yarn feed, the yarn arriving directly at the needle which is to pick it up and form the loop upon being lowered. This avoids both damage to the yarn and the wear of the members which might contact the yarn. The inner edge of the plate 108 is also not liable to substantial wear, as any possible contact with the needle latch is purely accidental, and not deliberate. This results in a positive operation of the yarn feeds, while permitting simplicity in the construction and arrangement of the members associated with each of the yarn feeds, and avoiding breakages of the latches.

When replacing the yarns by operating the thread-guides 104A, it is necessary to cut the yarns when inserting or pulling out active and inactive yarns. This is usually effected by means of a thread-cutter comprising a wheel formed by a disc-like or annular element having a saw-toothed edge designed to engage the yarn to be cut and to carry it towards a blade of a cutting knife, or towards one or another of a plurality of cutting knives provided around the circumference of the annular element, the latter being located in the interior of the trajectory of the upper end of the needles. The thread-cutter must rotate substantially at the speed of the needle cylinder, so as to effect a satisfactory cutting of the length of the yarn coming out of the knitted fabric. Conventionally these cutters are mounter on a so-called welt dial, but in relatively simple machines such as the machine particularly described, welt dials are not provided, as there is no requirement for the operation conventionally performed by a welt dial. Thus, instead of the welt dial there is provided a device—particularly shown in Figures 27 to 31—which serves to cut the yarns and which is caused to intervene at the moment when the yarn is to be cut.

With reference now to Figures 27 to 31, 140 indicates a supporting arm extending from the fixed annular element 7 carried by the frame 1. The arm 140 extends to a zone on the axis of the needle cylinder, but above the needle cylinder. A head 140A at the inner end of the arm 140 includes a housing coaxial with the needle cylinder axis for a hollow column 142 which can slide with respect to the head 140A without the possibility of rotating with respect thereto. The column 142 is urged upwardly by a spring 144 which by pressing on the head 140A pushes upwardly a plate 146 rigid with the upper end of the column 142.

At the lower end of the column 142 there is an enlarged head 142A. Below the head 142A there is provided a rotary unit comprising a plate 148 and a rotary disc 150 carried by a shaft 152 internally of and coaxially with the column 142, the shaft 152 being rotatable within the column but being movable axially with the column. The column is prevented from rotating, for instance by means of a groove 142B in which engages a pin 154 carried by the head 140A.

The disc 150 carries at its periphery a saw-toothed annular gear 156 which forms part of the above-mentioned thread-cutter which is arranged to cooperate with one or more cutting blades 158 carried by arms 160 rigid with the head 142A.

The plate 150 has at its underside, a frustoconical profile which substantially corresponds to an inner frustoconical surface of an annular element 3B assembled in the interior of the upper end of the needle cylinder and along which the fabric being formed is produced. The frustoconical profile at the underside of the plate 150 has an annular groove for a friction ring 162 which can bear, upon lowering of the plate 150, against the inner frustoconical surface within the needle cylinder 3, with the fabric M under formation being interposed therebetween (in particular see Figure 27). On the plate 148 there is provided a frustoconical race 148A which rotates with the unit 148, 150, 152.

When the plate 150 is located in a position partly raised from the needle cylinder 3, as shown in Figure 27 in solid lines, the gear 156 is stationary together with the unit 148, 150, 152. When the plate 150 is lowered, by movement of the column 142, to the position 150X in chain lines indicated in Figure 27, the friction ring 162 bears against the annular element 3B within the needle cylinder 3 and is thereby frictionally entrained for rotation whereby the unit 148, 150, 152 starts to rotate. In the lowered position 150X of the plate 150, the gear 156 reaches the active position for cutting the yarn together with one or other of the blades 158, which have been lowered, together with the plate 150 in the hereinafter described manner. Thus there is provided the possibility of cutting the yarn when, under the control of the program, the plate 150 is lowered from the position shown in solid lines in Figure 27 to the position 150X shown in chain lines.

In order to effect the movement of the column 142 from the raised position to the lowered position in which the friction ring 162 is driven, there is provided on the head 140A a small lever 166, which is pivotal around a pin 168 between the positions shown in solid and chain lines in Figure 27. The plane of the lever 166 can also be inclined relative to the axis of the pin 168 as may be seen with reference to Figures 29 and 30. A spring 170 biases the lever 166 into contact with the column 142 (see Figures 29 and 30). The lever 166 contacts the column 142 through a cut-out 174 in the head 140A. The column 142 is provided with a recess 172 having a flat surface; when the recess 172 is positioned within the cut-out 174, the lever 166 enters the recess under the action of the spring 170 (see Figures 27 to 29). 176 indicates a tie-rod with a spring 176A which moves the lever 166 between the positions shown in solid and chain lines in Figure 27. The lever 166 can also be moved manually to separate the lever from the column 142 against the action of the spring 170.

When the device is in an operable condition shown in Figures 27 to 29, the lever 166 is located in the recess 172 of the column 142. The plate 150 is in a raised position under the action of the spring 144 which tends to raise the column 142, against the counteraction of the lever 166 which is located between a side of the recess 172 and the upper edge of the cut-out 174. In this condition the device is set-up for the operation of the thread-cutter.

When the thread-cutter is to operate, that is when the plate 150 is to be lowered and the gear 156 is to be rotated, the tie-rod 176 is operated, either directly by the program by means of an electromagnetic servomotor or the like, or by means of a cam of the drum 34 (which may be a cam combined with the thread-guide control system) in such a manner as to act on the lever 166 through the spring 176A to lower the column 142 as indicated by arrow f6 against the action of the spring 144. The spring 176A applies a resilient force which presses the friction ring 162 into frictional driving relation with the needle cylinder, and thereby the plate 150 and the gear 156 are rotated by the needle cylinder to cause cutting of the yarn. When the yarn has been cut, the tie rod 176 is returned and the column 142 together with the plate 150 and associated components is raised by the spring 144. The saw-toothed annular gear 156 accordingly, is rotated only when the thread is cut, as determined by the program. The cut end of the thread reaches pneumatic retaining means.

The frustoconical race 148A is grazed by the yarn which is thus tensioned by the action which is exerted thereon by the race 148A when it is rotating.

When access is required to the upper end of the needle cylinder, that is when all the thread-guides and all the plates 108 are raised, or when access is required to the thread cutter itself, it is necessary that the plate 150 and the disc 148 and associated parts be moved to facilitate such access. For this purpose, the lever 166 is moved

manually in the direction of the arrow f5 of Figure 30 to remove the lever 166 from the recess 172 of the column 142 against the action of the spring 170. Under these conditions, the column 142 is no longer retained by the lever 166, and thus the spring 144 causes it to rise to an uppermost position in which the head 142A of the column 142 strikes against the head 140A of the arm 140. The column 142 is returned to its working position by pressing it downwardly in the direction of the arrow f6 of Figure 31, to bring the recess 172 into line with the lever 166 whereon the lever snaps into the recess under the action of the spring 170 to thereby lock the column and associated parts in the operative condition.

The machine described herein is also described and claimed in our co-pending Application No. 30417/77 (Serial No. 1,583,607).

WHAT WE CLAIM IS:—

1. A circular knitting machine comprising a rotary unit including a needle cylinder and cams, a program-cam drum coaxial with and underlying the needle cylinder, cam followers cooperating with the cams of the rotary unit, driving pawl means actuated by the cam followers and engageable with ratchet gear means rotatable with the drum, whereby actuation of the pawl means effects advance of the drum, and program-controlled means for rendering the followers temporarily inoperative.

2. A machine as claimed in claim 1, wherein the ratchet gear means comprises at least two ratchet gears of different tooth pitch, and the pawl means comprises at least one pawl associated with each respective gear, the or each pawl associated with one of said gears having a different stroke length from that of the or each pawl associated with the other of said gears.

3. A machine as claimed in claim 2, wherein each follower is an oscillating follower mounted on a respective shaft parallel to the axis of the needle cylinder and drum, and the associated pawl is connected to the shaft whereby oscillatory movements of the follower are transmitted to the pawl by the shaft.

4. A machine as claimed in any one of claims 1 to 3, wherein the said program-controlled means comprises an electromagnetic device for holding the follower in an inoperative position relative to the cam.

5. A machine as claimed in any one of claims 1 to 3, where in the program-controlled means comprises a mechanical device.

6. A machine as claimed in claim 4 or claim 5, wherein the program-controlled means is controlled by an electrical or mechanical program.

7. A machine as claimed in any one of claims 1 to 6, comprising a further follower, said further follower being mounted on a shaft which is parallel to the axis of the needle cylinder and drum and which carries a member for moving a radial cam for needle or jack butts, said further follower cooperating with cam means on the cam drum and being oscillated to actuate said member via the shaft.

8. A machine as claimed in any one of claims 1 to 7, comprising a further follower cooperating with cam means on the cam drum and operative to displace the needle cylinder to adjust the loop length.

9. A machine as claimed in claim 8, wherein the follower for displacing the needle cylinder is mounted on a shaft which is parallel to the axis of the needle cylinder and drum and which carries an arm having an inclined surface contacted by a member which is moved axially by pivotal movement of the arm to displace the needle cylinder, the follower being operative to pivot the arm via the shaft.

10. A circular knitting machine comprising a needle cylinder, a program drum coaxial with the needle cylinder, drive means actuable to drive the drum, said drive means comprising cams rotatable in synchronism with the needle cylinder, cam followers cooperating with the cams, and driving pawls driven by the cam followers and engageable with ratchet gear means fast for rotation with the drum such that actuation of the pawls effects advance of the drum, and program-controlled means for rendering said drive means temporarily inoperative.

11. A circular knitting machine substantially as hereinbefore described with reference to Figures 1 to 26 of the accompanying drawings.

MATHISEN, MACARA & CO.,
Chartered Patent Agents,
Lyon House,
Lyon Road,
Harrow,
Middlesex HA1 2ET.
Agents for the Applicants.

Printed for Her Majesty's Stationery Office by Burgess & Son (Abingdon), Ltd.—1981.
Published at The Patent Office, 25 Southampton Buildings, London, WC2A 1AY,
from which copies may be obtained.

1583594 COMPLETE SPECIFICATION
10 SHEETS *This drawing is a reproduction of the Original on a reduced scale*
Sheet 1

Fig.1

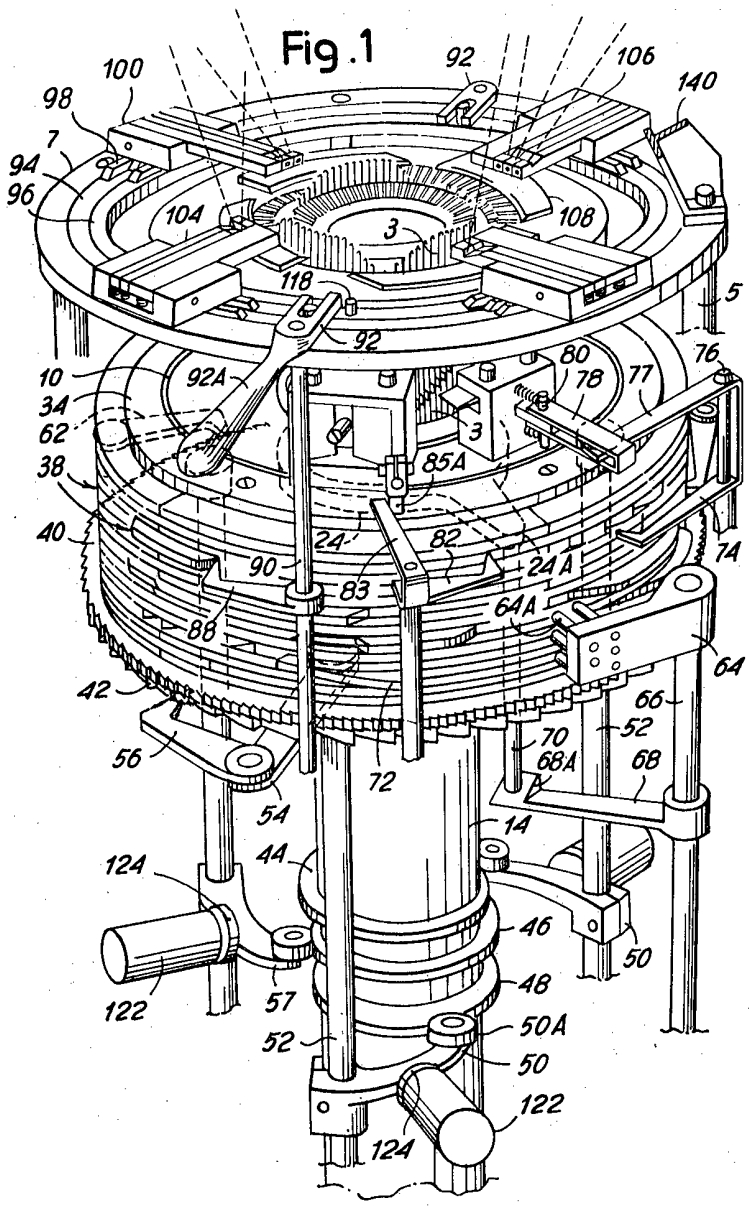

1583594 COMPLETE SPECIFICATION
10 SHEETS *This drawing is a reproduction of the Original on a reduced scale*
Sheet 2

Fig.2

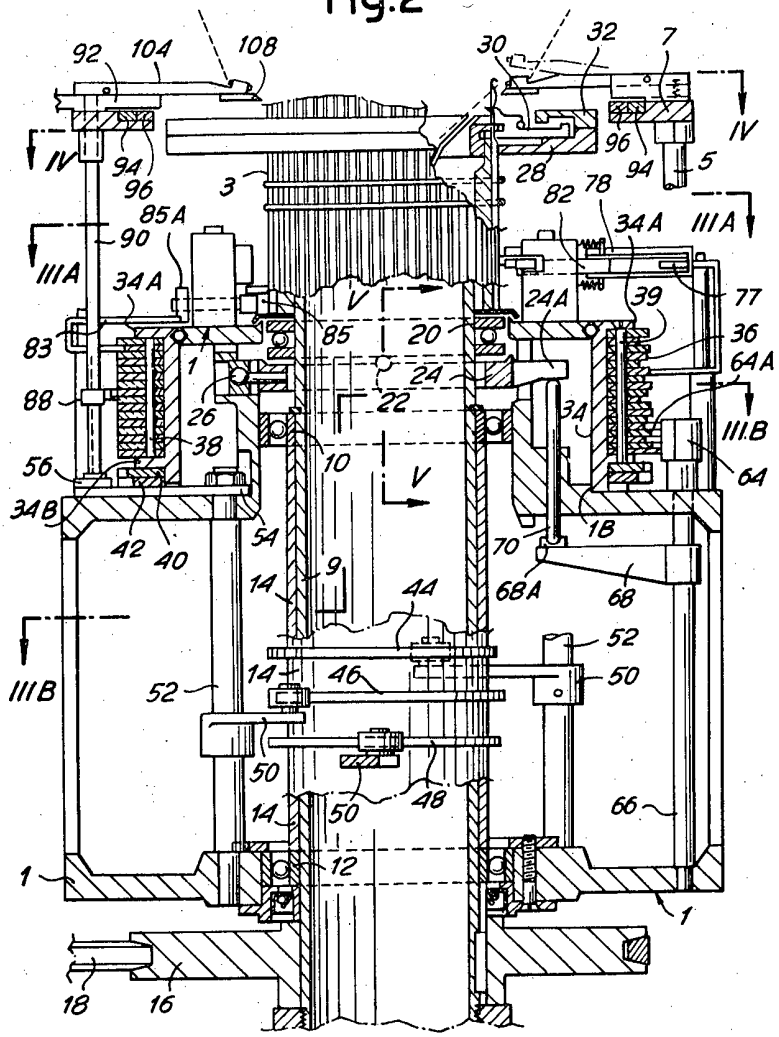

1583594 COMPLETE SPECIFICATION
10 SHEETS *This drawing is a reproduction of the Original on a reduced scale*
Sheet 3

Fig. 3A

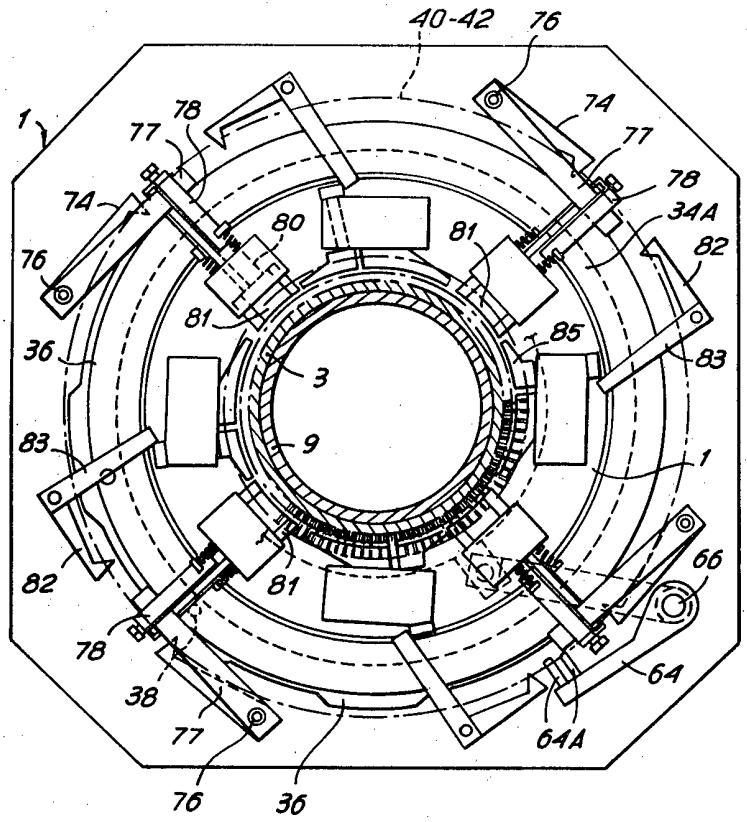

1583594 COMPLETE SPECIFICATION
10 SHEETS *This drawing is a reproduction of the Original on a reduced scale*
Sheet 4

Fig. 3B

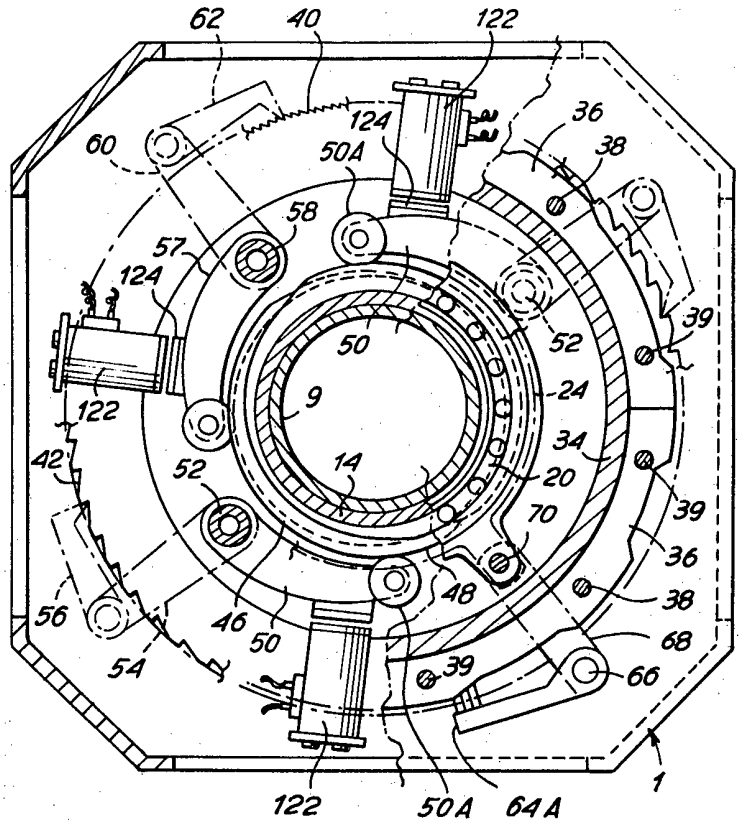

Fig.4

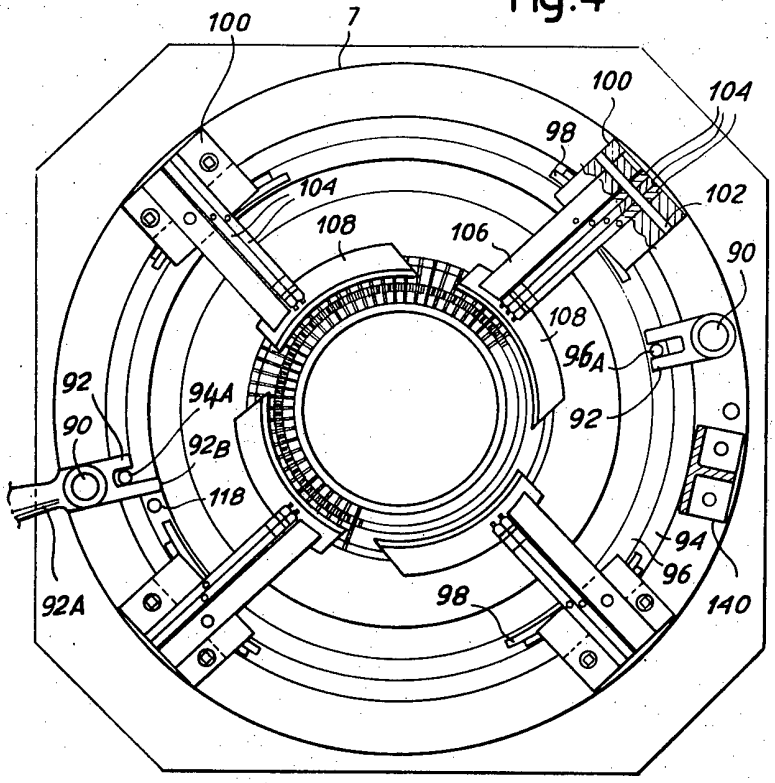
100
7
100
104
98
104
102
108
106
90
108
96A
92
92
94A
90
92B
118
94
96
140
92A
98

Fig. 5

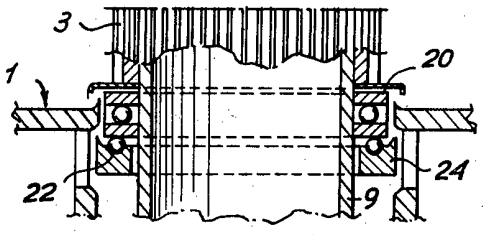
3
20
1
24
22
9

1583594 COMPLETE SPECIFICATION
10 SHEETS *This drawing is a reproduction of the Original on a reduced scale*
Sheet 6

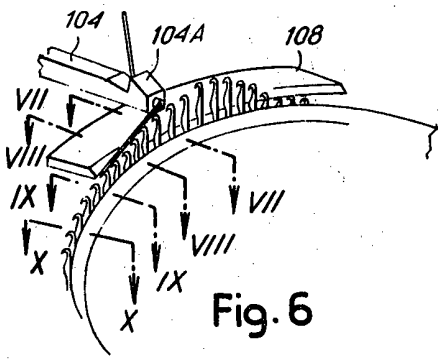

Fig.6

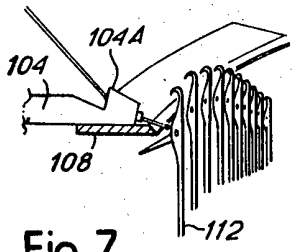

Fig.7

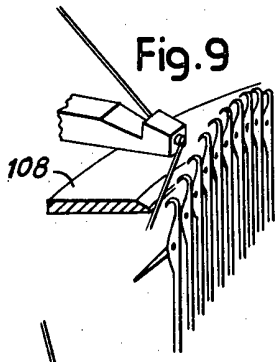

Fig.9

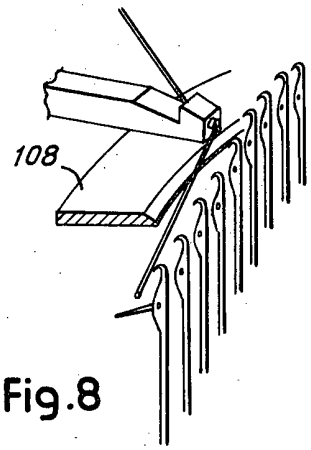

Fig.8

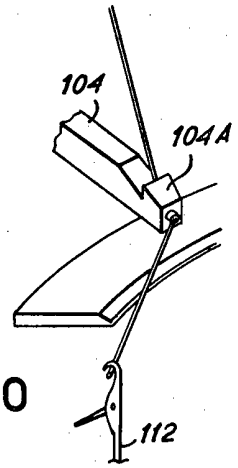

Fig.10

1583594 COMPLETE SPECIFICATION
10 SHEETS *This drawing is a reproduction of the Original on a reduced scale*
Sheet 7

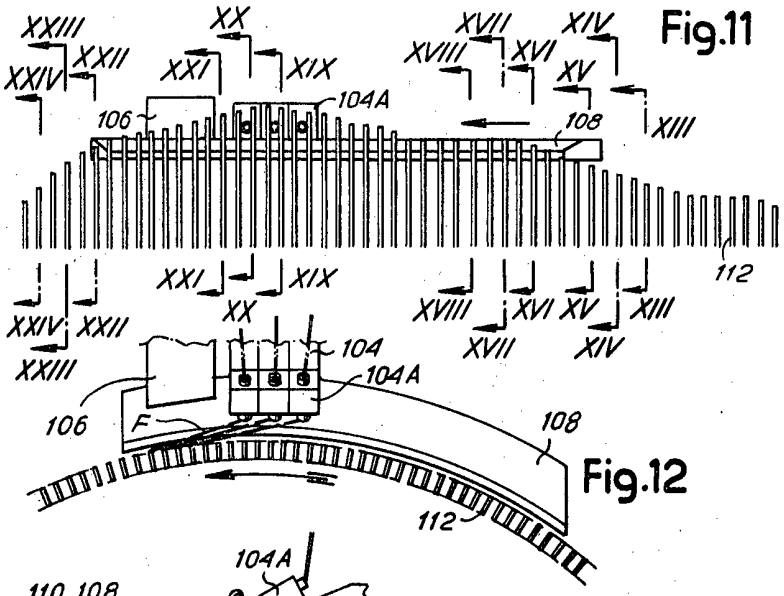

Fig.11

Fig.12

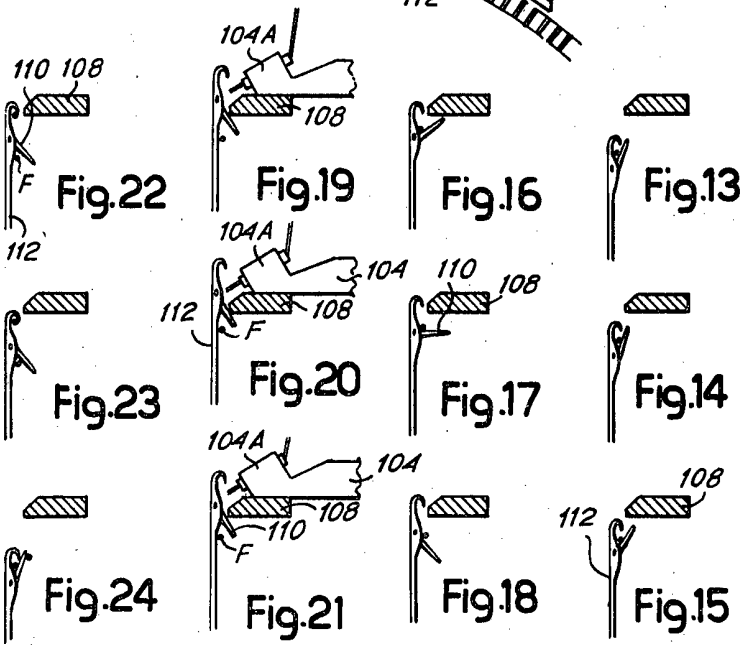

Fig.22 Fig.19 Fig.16 Fig.13

Fig.23 Fig.20 Fig.17 Fig.14

Fig.24 Fig.21 Fig.18 Fig.15

Fig. 26

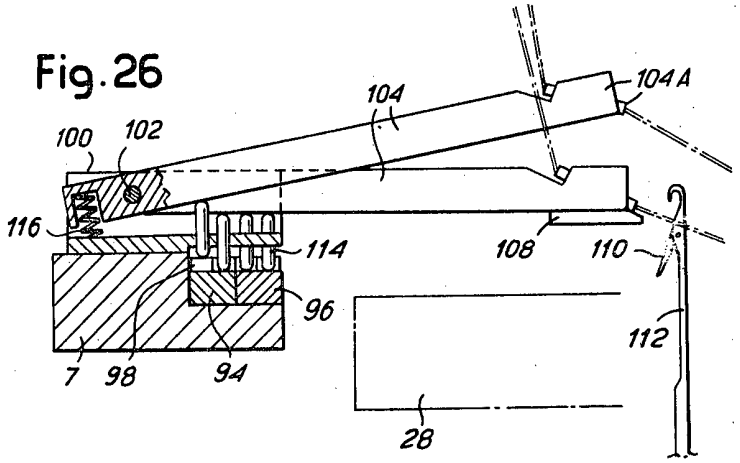
104
104A
100
102
116
114
108
110
96
112
7
98
94
28

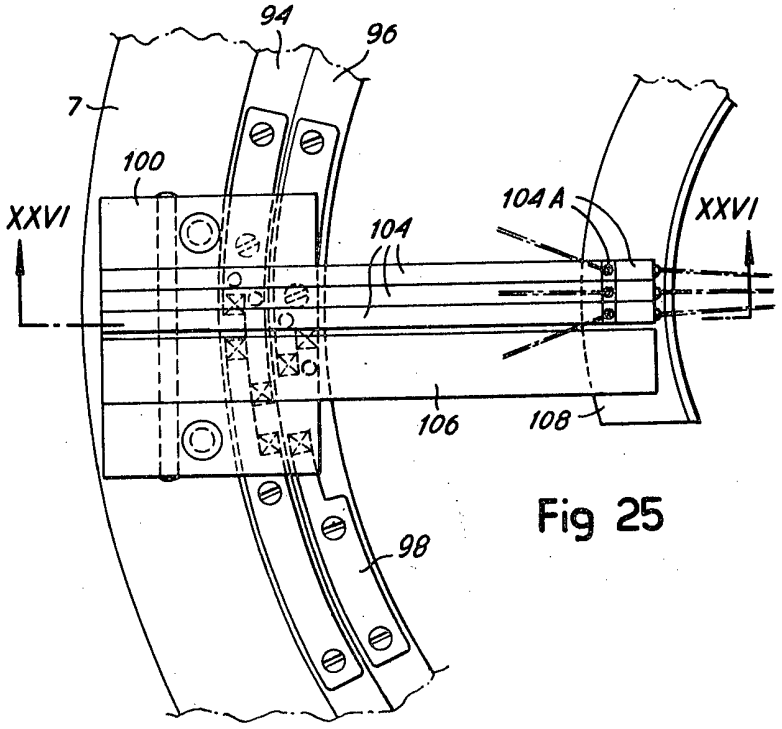
94
96
7
100
XXVI
104A
XXVI
104
106
108
98

Fig 25

1583594 COMPLETE SPECIFICATION
10 SHEETS This drawing is a reproduction of the Original on a reduced scale
Sheet 9

Fig.27

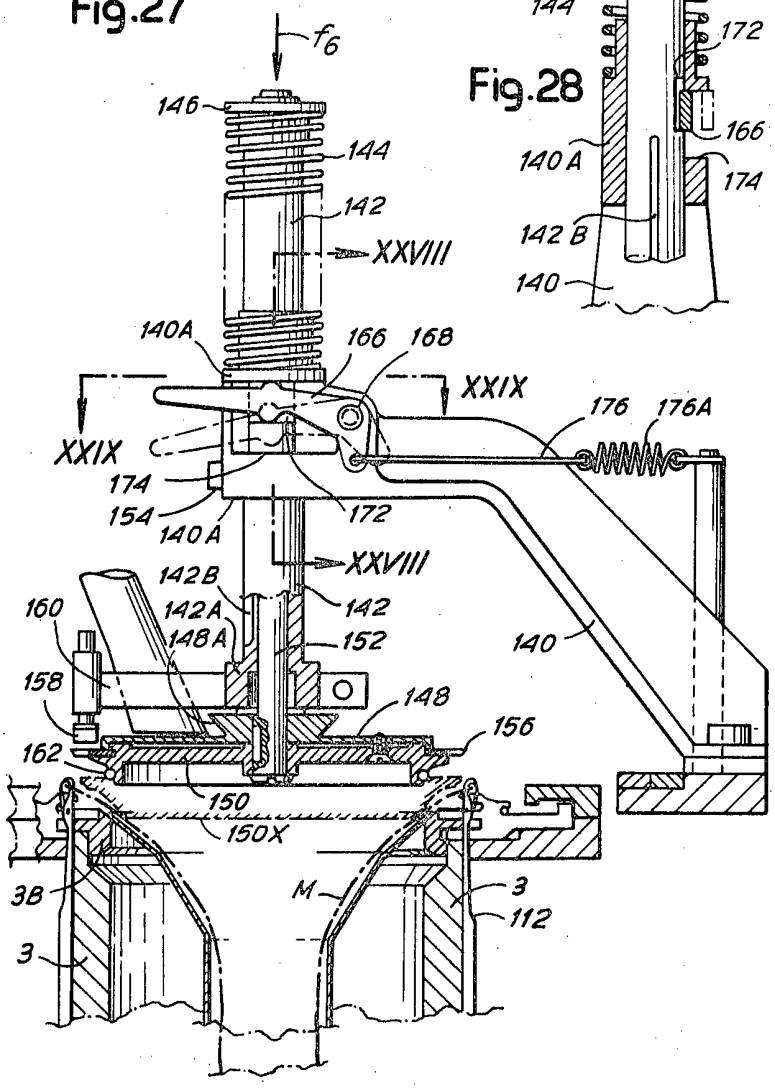

Fig.28

Fig.29

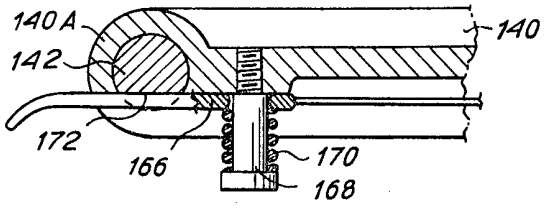

Fig.30

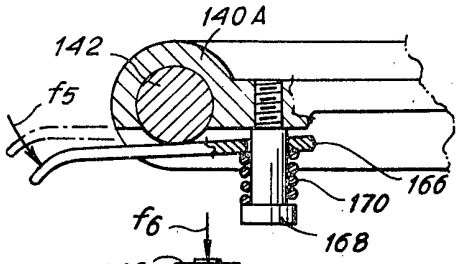

Fig.31

