R. L. BURNS.

DRILL STEM.

APPLICATION FILED FEB. 18, 1918.

1,344,221.

Patented June 22, 1920.

2 SHEETS—SHEET 1.

Fig. 1

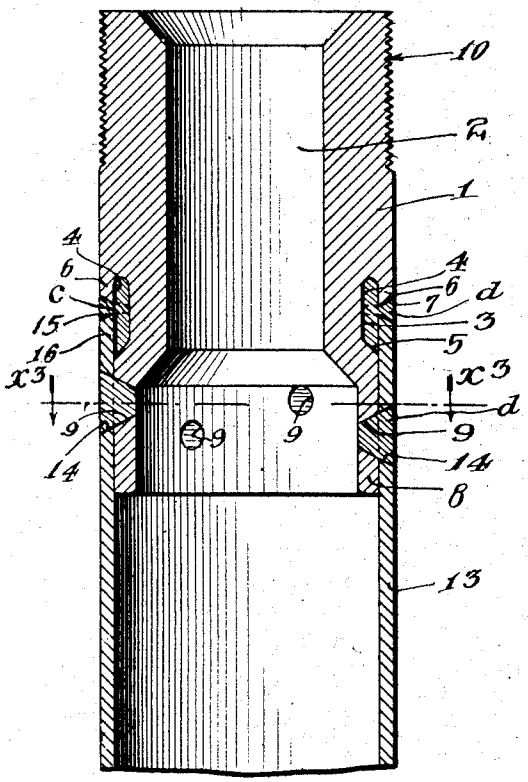

Fig. 2

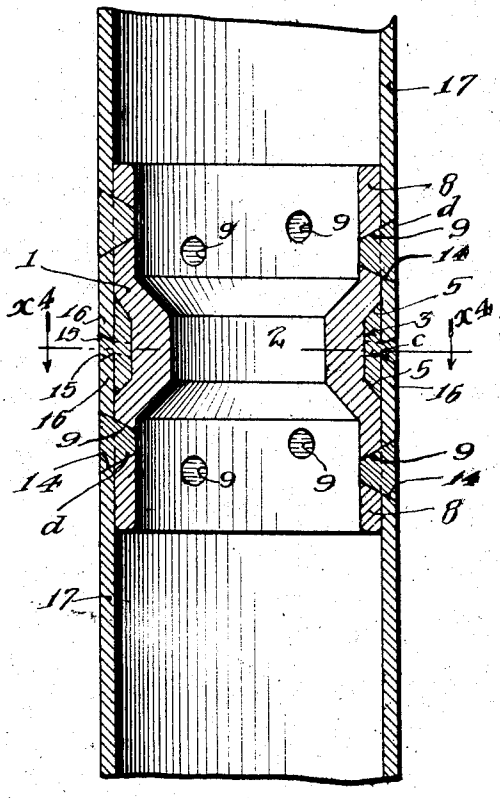

Fig 3

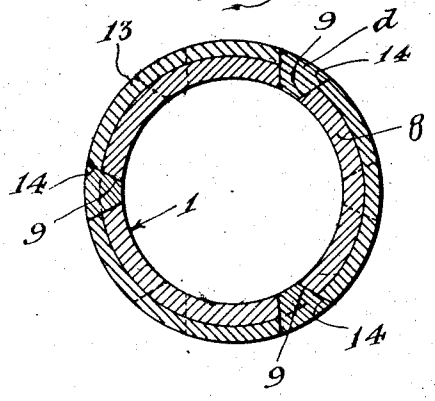

Fig. 4

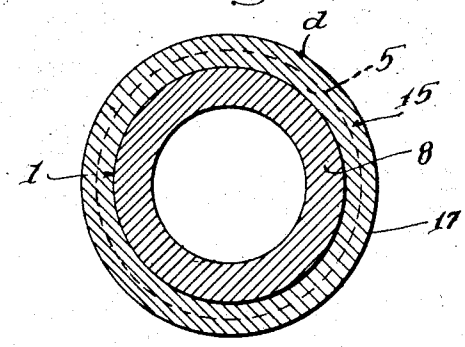

Witnesses:
Sully Russo
Lutte S. Alter

Inventor
Robert Lee Burns:
By Frederick W. Lyon atty.

R. L. BURNS.

DRILL STEM.

APPLICATION FILED FEB. 18, 1918.

1,344,221. **Patented June 22, 1920.**

2 SHEETS—SHEET 2.

Fig. 5

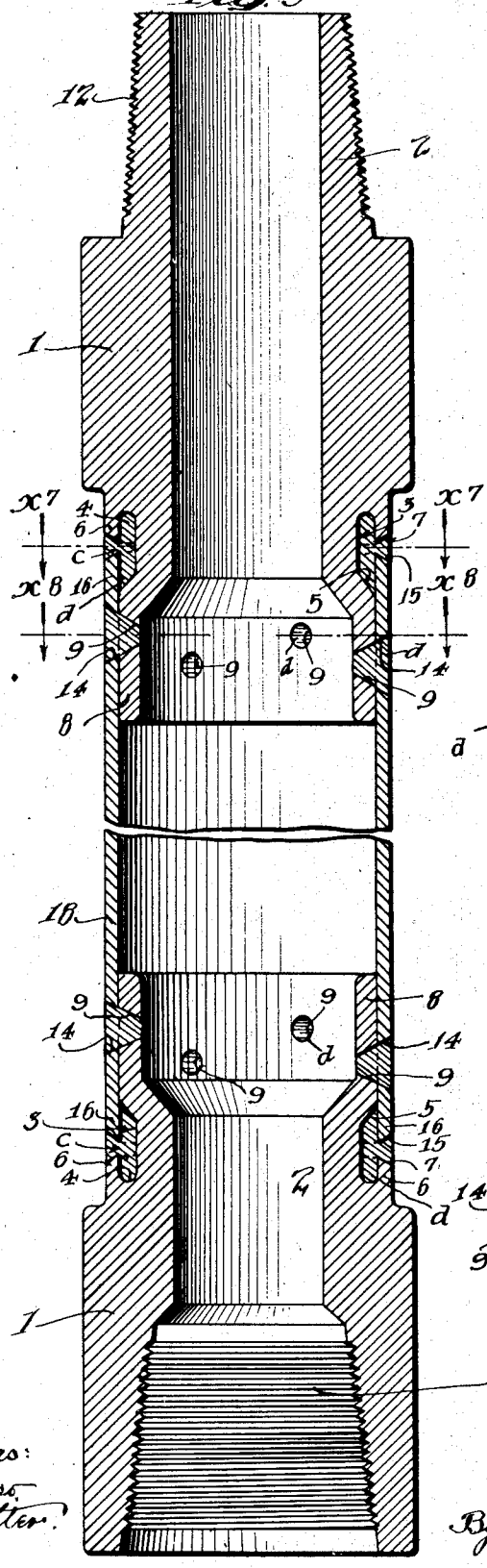

Fig. 6

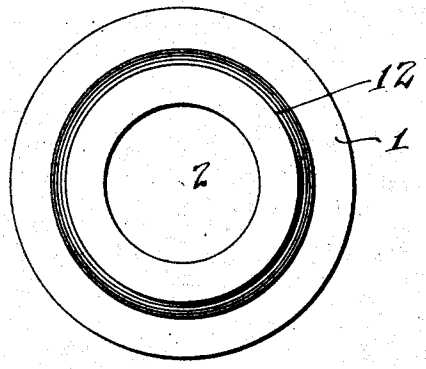

Fig. 7

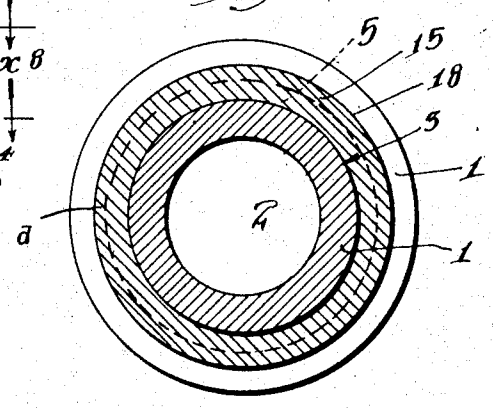

Fig. 8

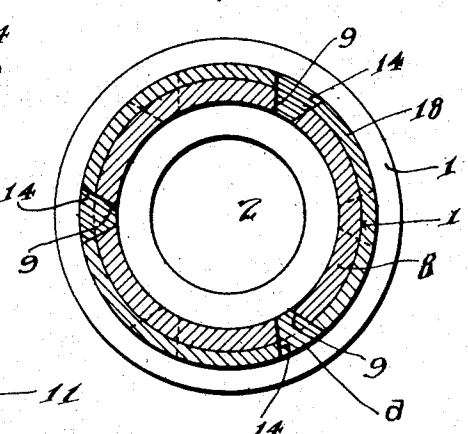

Witnesses:
Sully Russo
Lillie S. Alter

Inventor
Robert Lee Burns
By Frederick B. Lyon atty

UNITED STATES PATENT OFFICE.

ROBERT LEE BURNS, OF TAFT, CALIFORNIA, ASSIGNOR OF ONE-HALF TO CHARLES E. STRATTON, OF LOS ANGELES, CALIFORNIA.

DRILL-STEM.

1,344,221. Specification of Letters Patent. Patented June 22, 1920.

Application filed February 18, 1918. Serial No. 217,834.

To all whom it may concern:

Be it known that I, ROBERT LEE BURNS, a citizen of the United States, residing at Taft, in the county of Kern and State of California, have invented a new and useful Drill-Stem, of which the following is a specification.

An object of the invention is to make provision for securely joining together the sections of a drill pipe or stem.

Another object is to effect the connection of two sections of a drill stem by a comparatively simple construction.

Other objects and advantages will appear in the subjoined detail description.

The accompanying drawings illustrate the invention:

Figure 1 is a longitudinal mid section of one embodiment of the invention, the drill stem section being shown in position welded to the coupling member.

Fig. 2 is a longitudinal mid section of a modified form of the invention.

Fig. 3 is a plan section on line indicated by x^3—x^3, Fig. 1.

Fig. 4 is a plan section on line indicated by x^4—x^4, Fig. 2.

Fig. 5 is a longitudinal mid section of a modified form of the invention, male and female coupling members being shown on opposite ends of the drill pipe section.

Fig. 6 is a plan view of Fig. 5.

Fig. 7 is a plan section on line indicated by x^7—x^7, Fig. 5.

Fig. 8 is a plan section on line indicated by x^8—x^8, Fig. 5.

There is provided a coupling comprising a tubular body 1, the bore 2 of which is adapted to communicate with the interior of the drill pipe sections with which it is assembled. The body 1 is provided externally with an annular groove 3 and this groove in the forms shown in Figs. 1 and 5 forms an undercut portion 4 at one end of the groove, the other end being aslant outward toward the adjacent end of the body as indicated at 5. Thus the coupling member forms an overhanging shoulder 6 and the end of this shoulder is beveled as indicated at 7.

The coupling body 1 in all the forms of the invention is provided with a portion 8 of reduced wall thickness having outwardly expanding holes 9 arranged at intervals. These holes may be staggered as shown in the drawings.

In the form shown in Fig. 1 the coupling body 1 is provided with screw-threads 10 at one end. In the form of the invention shown in Fig. 2 the coupling body 1 has its end portions formed in duplicate, that is, both ends are provided with the reduced portions 8 and are also provided with the outwardly expanding holes 9. In this form of the invention the undercut portion 4 is absent but both ends are aslant as indicated at 5 corresponding to the slanting end 5 in Figs. 1 and 5.

In Fig. 5 one of the coupling bodies 1 constitutes a box coupling member provided with internal screw-threads 11; and another of the coupling bodies constitutes a pin coupling member having external screw-threads 12.

In practice, to make a drill stem by the use of the coupling members above described, referring more particularly to Fig. 1, a drill pipe section 13 will be provided with outwardly expanding holes 14 at points appropriate for registering with the holes 9 and preferably the ends of the drill stem section 13 will be beveled as at 15. The drill pipe section 13 will then be telescoped upon the reduced portion 8 to bring the holes 14 in registration with the holes 9 and so that an end portion of the pipe section will form an overhanging shoulder 16 externally of the groove 3. The drill pipe section 13 and coupling body 1 will be forced together until the overhanging shoulders 6 and 16 are slightly spaced from one another, such space being indicated at *c*. By reason of the shoulders 6, 16 the end portions of the groove adjacent said shoulders constitute pockets. Then molten metal *d* will be run into the groove 4 and into the space *c* and the parts will be further heated and welded by any suitable autogenous welding method.

Molten metal *d* will likewise be run into the holes 9, 14 and the welding operation carried on at these points also. In the form of the invention shown in Fig. 2 the end portions of drill pipe sections 17 will be provided with holes 14 the same as described for Fig. 1 and will also be provided with the beveled ends 15 the same as in said figure. The drill pipe sections 17 will be telescoped upon the reduced portions 8 of

the coupling body so as to form overhanging shoulders corresponding to the shoulder 16 in Fig. 1 and designated by the same reference characters. This forms pockets for the molten metal *d*, which is then run in the groove and in the space *c* between the shoulders 16 and the welding operation is then made. Also molten metal *d* will be run into the holes 9, 14 and said metal will be welded with the adjacent metal of the coupling and drill pipe sections.

In the form of the invention in Fig. 5 each of the coupling members will be inserted in the opposite ends of the drill pipe section 18 and the welding operations perfected the same as above described relative to the form shown in Fig. 1.

From the foregoing it is clear that the differences between the different forms of the invention are of a character to enable the joining together of the drill pipe sections to be effected by different methods of attachment. The form shown in Fig. 1 provides for welding together of the coupling body and the drill pipe section and the coupling body can be screw-threaded into the body of the tool or any other element to which it is desired to attach the drill pipe section. The form in Fig. 2 provides for a permanent welded connection between the adjacent ends of two drill pipe sections. The form in Fig. 5 provides for the permanent welding together of coupling members and a drill pipe section, and the coupling members are of the pin and box construction so that after the coupling members have been welded to the various drill pipe sections the various sections may be detachably connected together by assembling the box of one section with the pin of another section, as will be readily understood by those versed in the art pertaining to drill pipe couplings.

It is understood that, instead of making the holes 9, 14 before assembling the coupling member and drill pipe section, said holes may be formed simultaneously after said member and section are assembled, and the invention includes this construction also.

I claim:

1. A drill pipe coupling comprising a tubular body having an external annular groove for the reception of molten welding metal.

2. A drill pipe coupling comprising a tubular body having an external annular groove for the reception of molten welding metal, the body having a shoulder overhanging one end of the groove.

3. A drill pipe coupling comprising a tubular body having an external annular groove for the reception of molten welding metal, the body having a shoulder overhanging one end of the groove and said shoulder being beveled at its end.

4. In a drill stem, a coupling member having an external annular groove, a drill pipe section telescoped closely upon a portion of the coupling member and extending partly over the groove, and metal in the groove welded to the coupling member and drill pipe section.

5. In a drill stem, a coupling member having an external annular groove, a drill pipe section telescoped closely upon a portion of the coupling member and extending partly over the groove, the coupling member having a shoulder overhanging a portion of the groove in alinement with the drill pipe section, and metal in the groove welded to the coupling member and drill pipe section.

6. In a drill stem, a coupling member having an external annular groove, a drill pipe section telescoped closely upon a portion of the coupling member and extending partly over the groove in alinement with the drill pipe section, the coupling member having a shoulder overhanging a portion of the groove and the shoulder and end of the drill pipe being beveled and spaced from one another, and metal in the groove welded to the coupling member and drill pipe section.

7. In a drill stem, a coupling member having an external annular groove, a drill pipe section telescoped closely upon each end of the coupling member and extending partly over the groove in alinement with the drill pipe section and spaced from one another, and metal in the groove welded to the coupling member and drill pipe section.

8. In a drill stem, a coupling member having an external annular groove, a drill pipe section telescoped closely upon each end of the coupling member and extending partly over the groove in alinement with the drill pipe section and spaced from one another, the adjacent ends of the drill pipe sections being beveled, and metal in the groove welded to the coupling member and drill pipe section.

9. In a drill stem, a drill pipe section, a box coupling member inserted in and closely fitting one end of the pipe section, a pin coupling member inserted in and closely fitting the opposite end of the pipe section, each of the coupling members being provided externally with an annular groove and the end portions of the pipe section extending in alinement with one another over the grooves respectively, and metal in the grooves welded to the pipe section and to the coupling members respectively.

10. In a drill stem, a drill pipe section, a box coupling member inserted in and closely fitting one end of the pipe section, a pin coupling member inserted in and closely fitting the opposite end of the pipe section, each of the coupling members being provided externally with an annular groove, the end portions of the pipe section extend-

ing in alinement with one another over the grooves respectively, shoulders on the coupling member overhanging portions of the grooves respectively and the ends of the pipe section being spaced from the shoulders, and metal in the grooves welded to the pipe section and to the coupling members respectively.

11. In a drill stem, a drill pipe section, a box coupling member inserted in and closely fitting one of the pipe sections, a pin coupling member inserted in and closely fitting the opposite end of the pipe section, each of the coupling members being provided externally with an annular groove, the end portions of the pipe section extending in alinement with one another over the grooves respectively, shoulders on the coupling members overhanging portions of the grooves respectively, the ends of the pipe section being spaced from the shoulders and the shoulders and ends of the pipe section being beveled, and metal in the grooves welded to the pipe section and to the coupling members respectively.

12. The method of welding two members of a drill stem together, which consists in forming a groove in the periphery of one of the members, telescoping the other member closely upon a portion of the grooved member so that the end of the second member will extend over only a portion of the groove, pouring molten metal in the groove, and welding said metal and members together.

Signed at Taft, California, this 9th day of February, 1918.

ROBERT LEE BURNS.

Witnesses:
FLOYD MORRIS,
MAE MORRIS.