Aug. 23, 1932. H. L. HARTZELL 1,873,198

CIRCUIT INTERRUPTER

Filed Oct. 2, 1931

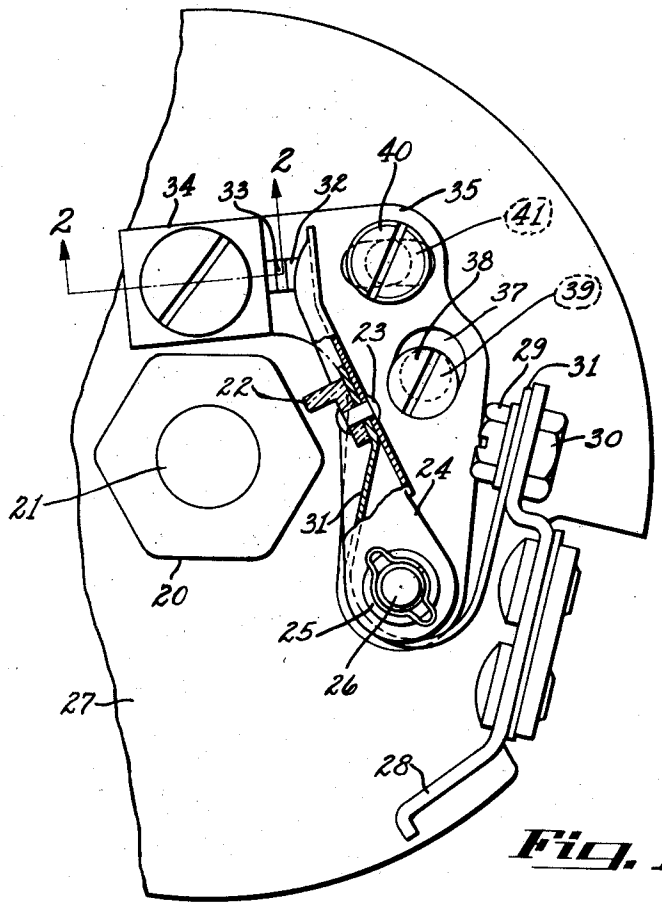

Fig. 1

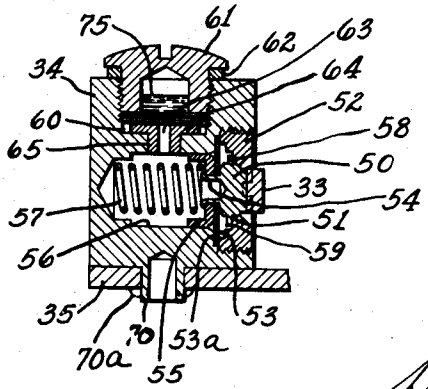

Fig. 2

Inventor

Herman L. Hartzell

By Spencer Hardman & Fike

his Attorneys

Patented Aug. 23, 1932 1,873,198

UNITED STATES PATENT OFFICE

HERMAN L. HARTZELL, OF ANDERSON, INDIANA, ASSIGNOR TO DELCO-REMY CORPORATION, OF ANDERSON, INDIANA, A CORPORATION OF DELAWARE

CIRCUIT INTERRUPTER

Application filed October 2, 1931. Serial No. 566,416.

This invention relates to an ignition apparatus for internal combustion engines and more particularly to the periodic circuit breaker which controls the ignition coil to create a sparking impulse for the engine. In the battery or direct current type of ignition system the closing of the contacts connects the current source with the primary circuit of an ignition coil. During the closing period current builds up in the ignition coil in order to energize the magnetic field of the coil. When the circuit breaker opens the energy of the coil is discharged to produce an electrical impulse which is transformed by the secondary coil to a voltage sufficient for sparking purposes. When the circuit breaker is operated at relatively high speed as required by a high speed internal combustion engine the closing period of the circuit breaker contacts is relatively brief, hence it is essential that the contacts should remain closed from the instant that they first engage until they are positively opened again by the cam which controls the circuit interrupter. In the usual form of an ignition timer a cam operates upon a lever carrying one of the contacts to open the circuit breakers, and, when the cam releases the lever, a spring returns the lever to circuit closing position. The energy of impact of the movable contact upon the stationary contact increases as the square of the speed and becomes a substantial amount at relatively high speeds with the result that there is a tendency of the movable contact to rebound from the stationary contact instead of remaining in contact therewith for the full duration of the intended closing period of the circuit interrupter. Thus rebounding of the contact will seriously interfere with the satisfactory and efficient operation of the ignition system when the engine operates at high speed.

It is one of the objects of the present invention to minimize rebounding of the movable contact from the stationary contacts at high speed and this object is accomplished by a novel shock absorbing mounting for the stationary contact.

Further objects and advantages of the present invention will be apparent from the following description, reference being had to the accompanying drawing wherein a preferred embodiment of one form of the present invention is clearly shown.

In the drawing:

Fig. 1 is a fragementary plane view of an ignition circuit interrupter or timer illustrating the present invention.

Fig. 2 is a fragmentary sectional view taken on the line 2—2 of Fig. 1.

Referring to the drawing the circuit interrupter comprises a cam 20 driven by shaft 21 and having lobes adapted to cooperate with a rubbing block 22 fastened by rivet 23 to a circuit breaker lever 24 having a nonconducting hub 25 pivotally supported upon a pin 26 attached to a circuit breaker plate 27. The plate 27 insulates a terminal plate 28 and is connected by a bolt 29 and nut 30 to one end of a leaf spring 31 the other end of which is clamped between the rubbing block 22 and lever 24 and is secured by the rivet 23. The lever 24 carries a movable contact 32 engageable with a relatively stationary contact 33 mounted in a manner to be described upon a block 34 which is secured to a contact bracket 35 pivotally supported by the plate 27 coaxially with respect to the lever 24, or concentric with respect to the stud 26. In order to adjust the bracket 35 it is provided with a slot 37 which receives a screw-driver slotted disc 38 having an eccentric shank 39 pivotally supported by the plate 27. By turning the disc 38 the bracket 35 is caused to turn about the stud 26 for the purpose of adjusting the distance between the rubbing block 22 and the cam 20. The bracket 35 is secured in the desired position of adjustment by screw 40 threadedly connected with the plate 27 and passing through an arcuate slot 41 in the bracket 35.

The block 34 contains a device providing a shock absorbing mounting for the relatively stationary contact 33. The contact 33 is attached to a rivet head 50 having a cylindrical surface 51 guided for horizontal sliding movement by a bushing 52 threadedly attached to the block 34 and providing means for clamping the edge of a fabric disc 53 against a seat 53*a* provided by the block 34.

The tubular shank 54 of the rivet head 50 passes through the disc 52 and through a cup-shaped piston 55 guided for horizontal sliding movement by a cylinder 56 provided by the block 34. A spring 57 interposed between the closed end wall of the cylinder 56 and the piston 55 urges a flange 58 provided by the rivet head 50 against a seat 59 provided by the bushing 52 thereby limiting movement of the contact 33 away from the block 34.

The block 34 provides an oil reservoir 60 closed by a cap 61 sealed by a gasket 62. The reservoir 60 communicates with the cylinder 56 through a metering hole 63 provided by a bushing 64 press fitted into a hole 65 provided in a wall of the cylinder 56. The block 34 is provided with a tubuluar shank 70 by which the block is attached to the bracket 35 by riveting the shank as indicated at 70*a*.

When the movable contact 32 strikes the stationary contact 33, the force of impact is dissipated by causing the piston 55 to move toward the left thereby causing oil, the level of which is indicated at 75, to be forced from the cylinder 56 through the metering passage 63 into the reservoir 60. In this case the force of impact of the contact 32 upon the contact 33 is absorbed as heat developed by friction of the moving parts and friction of oil flowing through the metering passage 63. Since the contact 33 does not produce an appreciable reaction upon the contact 32 the latter does not rebound from the contact 33 even at high speed but remains in contact with contact 33 for the prescribed period depending upon the contour of the lobes of the cam. Before the cam operates upon the rubbing block 22 to separate contact 32 from contact 33 the spring 57, which is stronger than the spring 31, moves the contact 33 toward the right, thus restoring it to normal position during the closing period of the circuit interrupter. It is desirable that the contact 33 be restored to normal position before the contacts 32 and 33 are separated by the cam 20 in order that the timing of the interrupter opening remain constant with respect to the position of the cam 20.

While the form of embodiment of the present invention as herein disclosed, constitutes a preferred form, it is to be understood that other forms might be adopted, all coming within the scope of the claims which follow.

What is claimed is as follows:

1. A circuit interrupter comprising, in combination, a pair of cooperating contacts, means for separating the contacts, a spring for closing the contacts and a shock absorbing support for one of the contacts, said support comprising a liquid reservoir, a cylinder member communicating therewith, a piston member within the cylinder, one of said members carrying one of the contacts and movable in a direction to force liquid from the cylinder into the reservoir when the contact carried by said member is struck by the other contact, and means for moving said member in the opposite direction before the contacts are separated.

2. A circuit interrupter comprising, in combination, a pair of cooperating contacts, means for separating the contacts, a spring for closing the contacts and a shock absorbing support for one of the contacts, said support comprising a liquid reservoir, a displacement chamber part communicating with the reservoir through a relatively restricted passage, a displacement member part cooperating with the chamber part, one of said parts carrying one of the contacts and movable in a direction to force liquid from the displacement chamber into the reservoir when the contact carried by said part is struck by the other contact, and means for moving said part in the opposite direction before the contacts are separated.

3. A circuit interrupter comprising, in combination, a pair of cooperating contacts, a lever carrying one of the contacts, a cam cooperating with the lever to separate the contacts, a spring cooperating with the lever to close the contacts, and a shock absorbing support for the relatively stationary contact, said support comprising a piston carrying said contact, a cylinder receiving the piston, a liquid reservoir connected with the cylinder through a restricted passage, the liquid being forced through said passage from the cylinder to the reservoir when the movable contact strikes the stationary contact, and a relatively strong spring for moving the piston to normal position before the contacts are separated.

In testimony whereof I hereto affix my signature.

HERMAN L. HARTZELL.