W. R. GOODMAN.

EXERCISING DEVICE.

APPLICATION FILED FEB. 12, 1913.

1,123,272. Patented Jan. 5, 1915.

Fig. 1

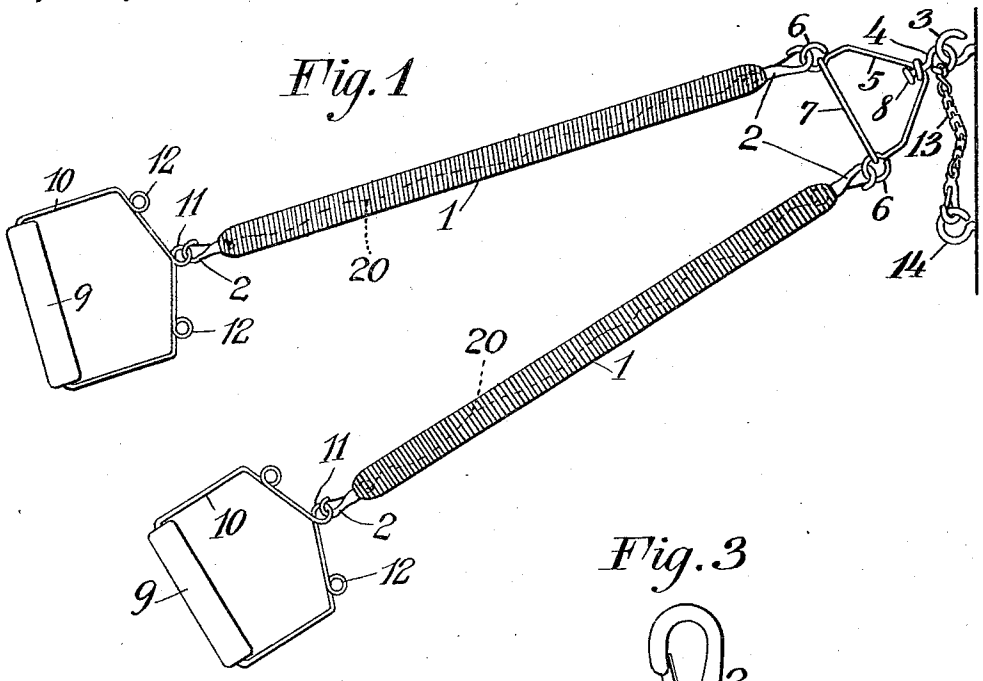

Fig. 3

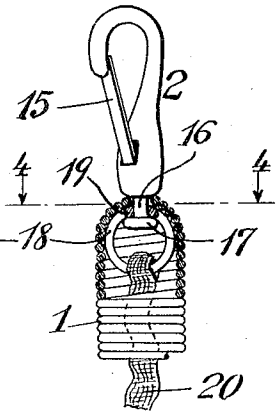

Fig. 4

Fig. 2

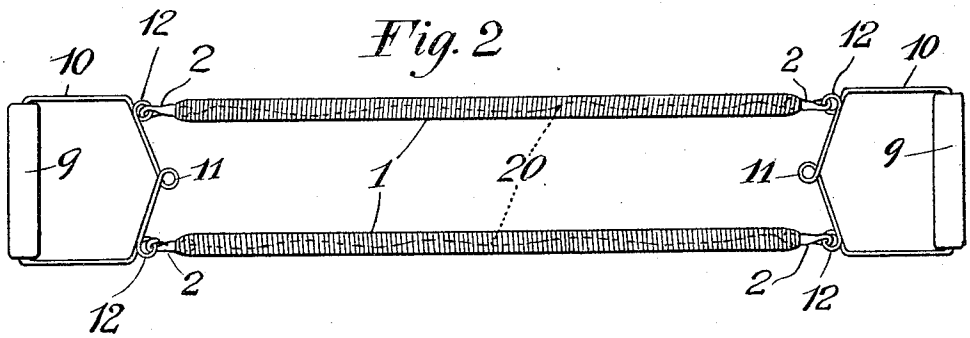

Witnesses:
Peter A. Loe
H. C. Legan

William R. Goodman Inventor
By his Attorneys
Edwards Sager & Wooster

UNITED STATES PATENT OFFICE.

WILLIAM R. GOODMAN, OF PALISADE, NEW JERSEY.

EXERCISING DEVICE.

1,123,272. Specification of Letters Patent. Patented Jan. 5, 1915.

Application filed February 12, 1913. Serial No. 747,901.

To all whom it may concern:

Be it known that I, WILLIAM R. GOODMAN, a citizen of the United States, residing at Palisade, in the county of Bergen and State of New Jersey, have invented certain new and useful Improvements in Exercising Devices, of which the following is a full, clear, and exact specification.

My invention relates to an improved exercising device and has particular reference to spring exercisers.

One object of my invention is to provide a construction whereby the spring exerciser may be used as a wall exerciser for obtaining a certain character of exercises corresponding with those obtainable by ordinary chest weights and also whereby the spring or springs may be used independently of any wall connection for various exercises with the springs strained between the two hands or between feet and hands, etc.; also to provide means whereby the springs may be quickly and conveniently changed for adaptation to each class of exercises.

Although the spring exerciser as above referred to is very advantageous in having the advantage of adaptability to different classes of exercises not obtainable by other forms of exercisers, yet it is of vital importance to render the use of the spring exerciser perfectly safe. Thus if the springs become disconnected at their ends when distended, their use is dangerous. Thus another object of my invention is to produce a construction whereby the disconnection of the ends of the springs during use of the apparatus is practically impossible. Long continued tests of my improved device have proven its complete safety in this respect. My improved exerciser also includes other precautions of safety which are hereinafter described.

Other objects of my invention are to secure simplicity in construction and a pleasing appearance while maintaining the advantages of safety and convenient interchangeability.

My invention will be understood from the following description and accompanying drawings in which—

Figure 1 is a side view of an exerciser embodying my invention and shown connected to the wall for certain class of exercises; Fig. 2 is a plan view of the exerciser shown with the springs connected between the two handles for adaptation to another class of exercises; Fig. 3 is a detail view with the spring partly broken away showing the form of connection between the end of each spring and its respective snap hook; and Fig. 4 is a sectional view on the line 4—4 with the spring partly broken away.

Referring to Fig. 1, the springs are shown at 1, 1 having at their ends the snap hooks 2. A hook is shown at 3 indicated as fastened to the wall to which hook another hook 4 is connected, to the shank of which is fastened a bracket 5 of heavy steel wire. This bracket has formed at its lower ends the eyes 6 adapted to receive the snap hooks 2, the rod 7 acting as a brace between the ends of the bracket. The bracket is connected to the hook 4 by a closely fitting turn around the shank of the hook 4, the head 8 serving as an abutment for holding the parts together. The handles 9 have connected to them the brackets 10 which are made up of heavy steel wire having their ends extending within the handles. The wire is looped at its central part to form eyes 11 and is also looped at each side of the eye 11 to form additional eyes 12. As shown in Fig. 1 the exerciser is arranged for that class of exercises similar to those obtained by the use of ordinary chest weights. Secured to the hook 4 is a chain 13 having a snap hook at the opposite end connected to an eye 14 securely fastened to the wall. This connection forms a safety line so that in case the hook 3 should become detached as the result of continued use of the apparatus, the safety line or chain will prevent the springs from being thrown toward the user as they would then be held by the chain and eye 14. Fig. 2 shows the springs connected between the two handles for securing a different class of exercises from those obtainable with the wall connection above described. In Fig. 2, the springs are shown connected between the eyes 12 of the handle brackets. With this form of exerciser adapted for different classes of exercises, it

is obvious that the construction should be such that the change from one arrangement of the device to the other should be accomplished as quickly and conveniently as possible. The snap hooks 2 are provided with a blade-spring 15 and it is apparent that by pressing this blade the hooks may readily be connected and disconnected from the eyes in the wall bracket 5 and also may readily be connected and disconnected to the several eyes in the handle brackets.

In order to fulfil the essential requirement of strength in the connection between the hooks 2 and the ends of the springs, I have devised the form of construction shown in Figs. 3 and 4. In this construction there is formed integrally with the body of the snap hook a shank or neck 16 and an enlarged head 17. A malleable iron or steel ring 18 is connected to the shank 16 by having integrally formed with the ring an enlarged part 19 adapted to embrace the shank and is securely connected thereto by hammering over the open ends of the part 19 so as to clamp the shank, as well indicated in Fig. 4. The end of the spring is secured to the form of construction just described, by conforming the turns of the spring to the upper part of the ring 18 as shown in Fig. 3; that is, the first turn of the spring is wound above the upper part of the ring 18 and the succeeding turns are of gradually increasing diameter in accordance with the increased width across the ring toward its diameter. The strength of this form of connection has been found to considerably exceed that of the spring itself. This is due to the fact that although the turns of the spring of normal diameter are quite flexible and yielding, yet as the convolutions of the spring around the ring 18 decrease in diameter, they have the property of increased stiffness so that when the spring is distended the separation between the convolutions of the spring is less and less as the diameter of the turns at the end of the spring becomes decreased, the last turn or two not yielding to any appreciable amount. Furthermore, in making this connection of the end of the spring there is no severe strain or twist in any part of the wire so that the inherent strength of the wire is not lessened at any one or more points, such as would occur if any sharp bends or twists were made in the end of the spring. A further provision for safety is the flexible cord or tape 20 which extends within and throughout the length of the spring and is connected at each end to the ring 18, which forms a convenient means for such connection. This cord or tape 20 is of sufficient length to permit the full extension of the spring and is provided so that if in cases of improper use of the device, or by accident, the spring should break at one or more points, the cord or tape 20 will serve to prevent parts of the spring from flying out and from separating from the connections between the brackets and so prevent danger to the user.

It will be understood from the above that my improved exerciser is conveniently adapted for interchangeability and for obtaining different classes of exercises, fulfils in the highest degree the requirement of strength and safety throughout all parts, is simple in construction and presents a pleasing appearance.

Having thus described my invention, what I claim as new and desire to secure by Letters Patent of the United States is:—

1. In a spring exerciser, the combination with the springs, of hooks secured to the ends thereof, a wall bracket adapted to receive said hooks, means for connecting said bracket to a fixed part, a safety connection between said bracket and the fixed part, handles having brackets, each of said brackets having a plurality of eyes to which said springs are adapted to be connected interchangeably by said hooks, and a safety cord within each of said springs connected to said hooks.

2. In a spring exerciser, the combination with the springs, of hooks at the ends thereof, a ring connected to the inner end of each of said hooks, the end of the spring being wound over said ring with convolutions of decreasing diameter and less than the full diameter of the spring, a safety cord within each of the springs and connected to one of said rings at each end of the spring, and handles having brackets adapted to be engaged by said hooks.

3. In a spring exerciser, the combination with the springs, hooks at the ends thereof, each of said hooks having a shank with an enlarged head, a ring having a part embracing said shank, the end of the spring being wound over said ring with convolutions of decreasing diameter and less than the full diameter of the spring, a safety cord within each of the springs and connected to one of said rings at each end of the spring, and handles having brackets adapted to be engaged by said hooks.

4. In a spring exerciser, the combination with the springs, of hooks at the ends thereof, each of said hooks having an enlarged part at its inner end, the end of the spring being wound over said enlarged part with convolutions of a diameter less than the full diameter of the spring, a wall bracket adapted to receive said hooks, means for connecting said bracket to a fixed part, a safety connection between said bracket and

the fixed part, handles having brackets, each of said brackets being formed of a wire looped at a plurality of points and to which loops said springs are adapted to be connected interchangeably by said hooks, and a safety cord within each of said springs connected to said hooks.

In testimony whereof I affix my signature, in presence of two witnesses.

WILLIAM R. GOODMAN.

Witnesses:
L. K. SAGER,
GEO. N. KERR.

Copies of this patent may be obtained for five cents each, by addressing the "Commissioner of Patents, Washington, D. C."