US 20030126820A1

(19) **United States**

(12) **Patent Application Publication** (10) **Pub. No.: US 2003/0126820 A1**

Callahan et al. (43) **Pub. Date: Jul. 10, 2003**

(54) **JOIST REINFORCING BRACKET**

(76) Inventors: **Robert M. Callahan**, Boones Mill, VA (US); **Ronald B. Shiflett**, Rocky Mount, VA (US)

Correspondence Address:
Stephen R. Greiner, Esquire
GREINER LAW OFFICES, P.C.
6701 Democracy Blvd., Suite 110
Bethesda, MD 20817 (US)

(21) Appl. No.: **10/314,699**

(22) Filed: **Dec. 10, 2002**

Related U.S. Application Data

(63) Continuation-in-part of application No. 09/796,531, filed on Mar. 2, 2001, now abandoned.

Publication Classification

(51) **Int. Cl.**[7] **E04C 2/52**; E04G 23/00; E02D 37/00; E04B 1/38; E04C 5/00

(52) **U.S. Cl.** **52/514**; 52/712; 52/220.8; D08/349

(57) **ABSTRACT**

A bracket for reinforcing a wooden joist including a body having a central portion with a base wall. An upper portion is integrally formed with the central portion and has a first wall secured to and extending forwardly from the top of the base wall and a second wall secured to and extending from the front of the first wall. A notch in the top of the base wall extends upwardly through the first and second walls. A lower portion is integrally formed with the central portion and has a third wall secured to and extending at right angles from the bottom of the base wall and a fourth wall secured to and extending at right angles from the third wall. A brace is rigidly affixed to the base wall beneath the notch.

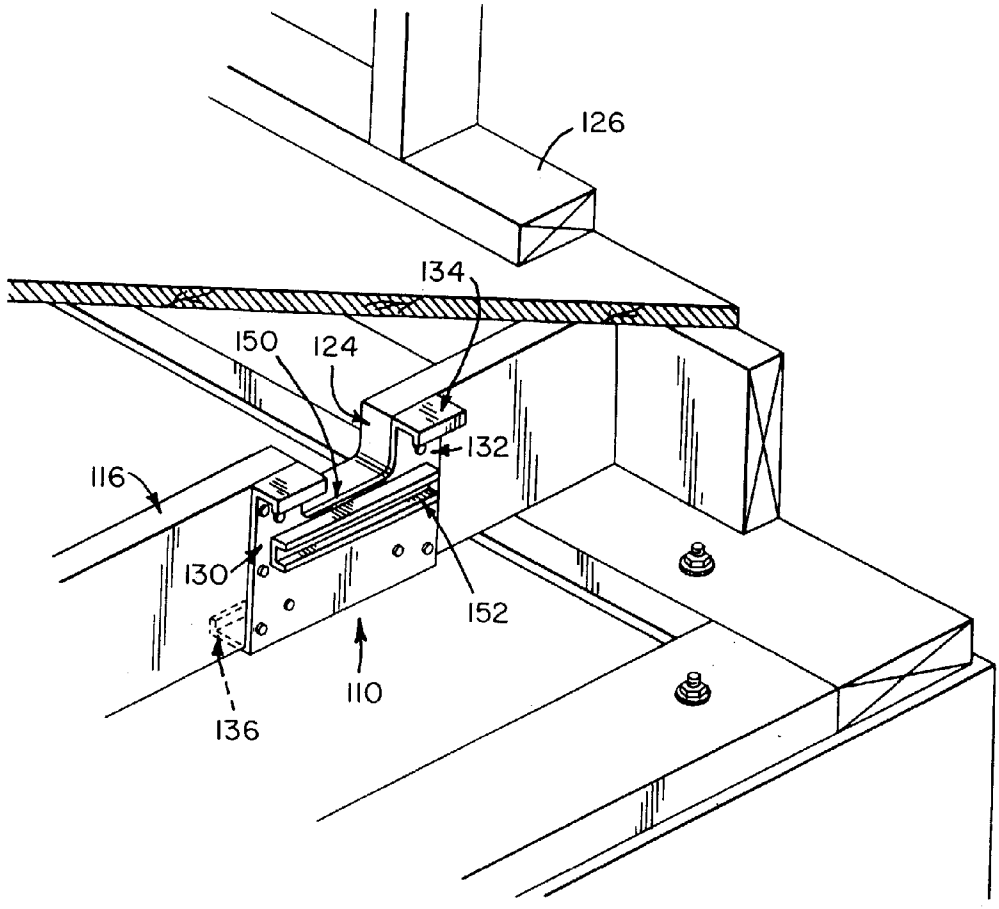

FIG. 1

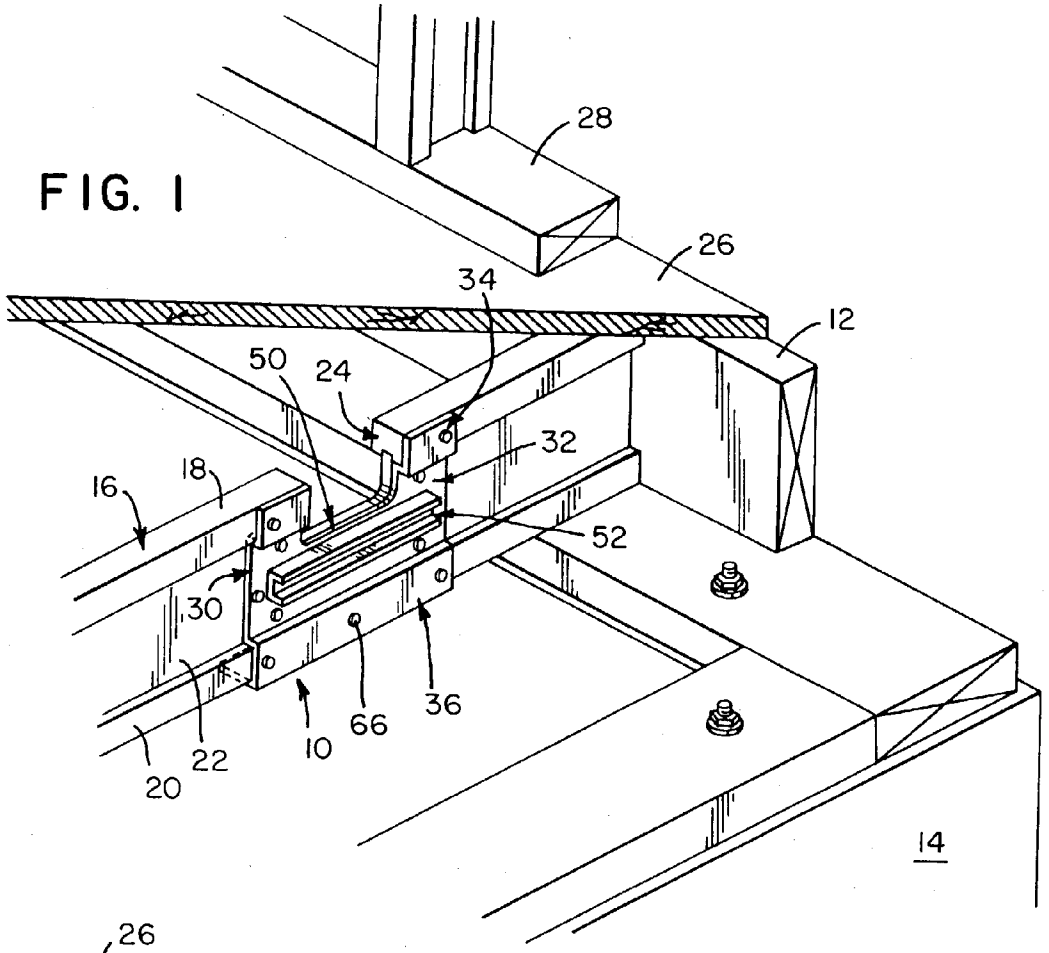

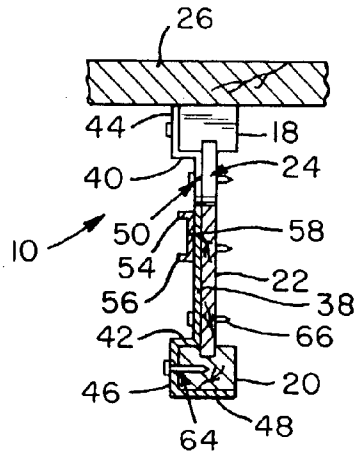

FIG. 3

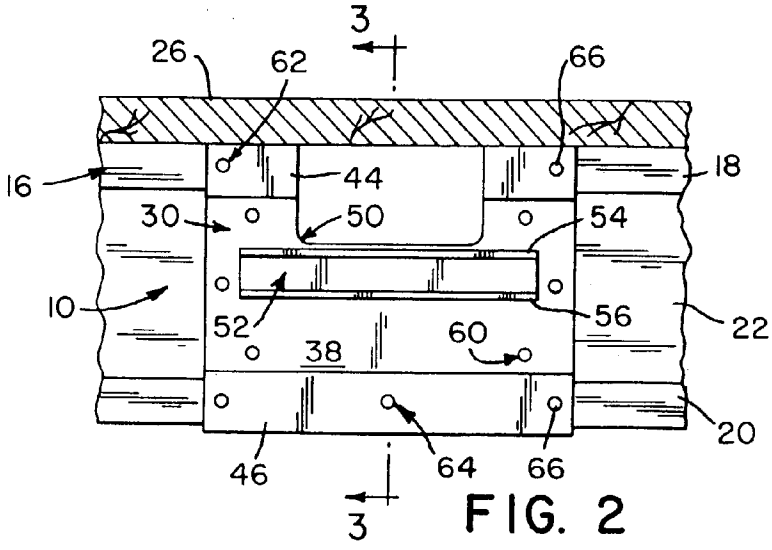

FIG. 2

FIG. 4

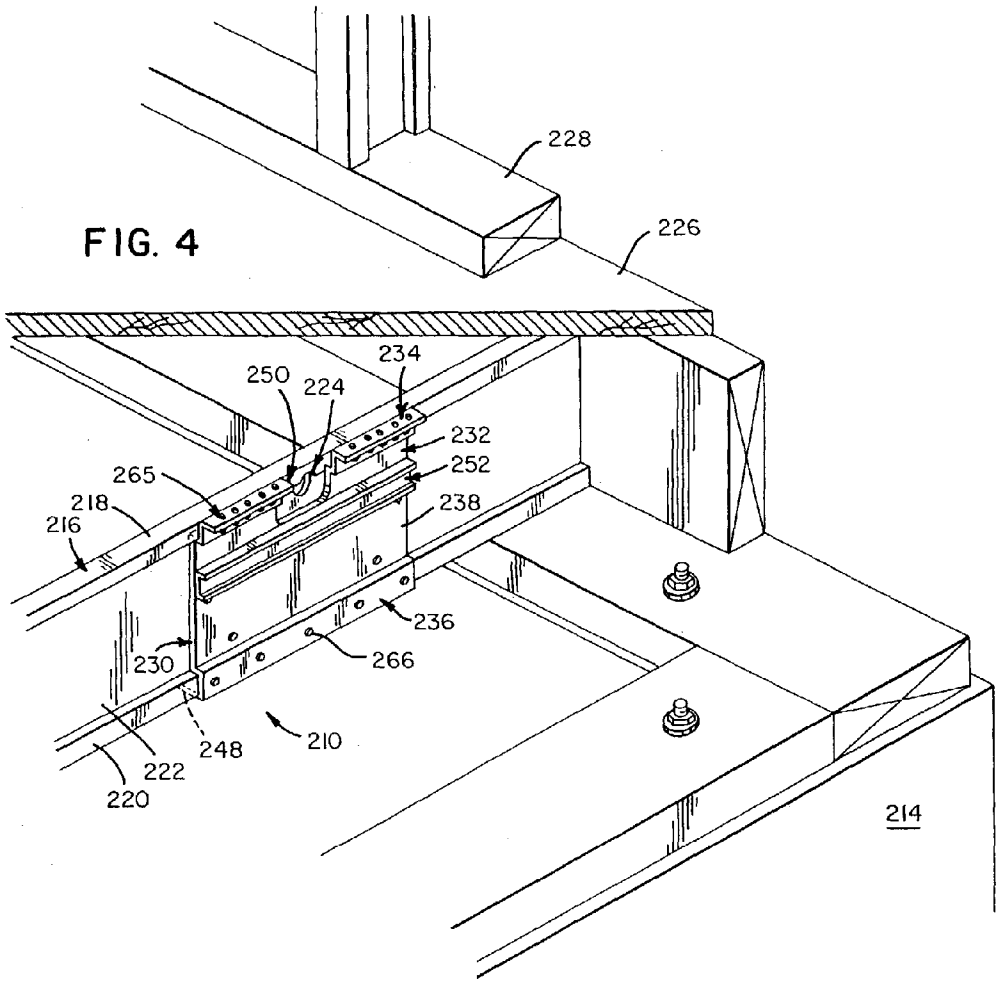

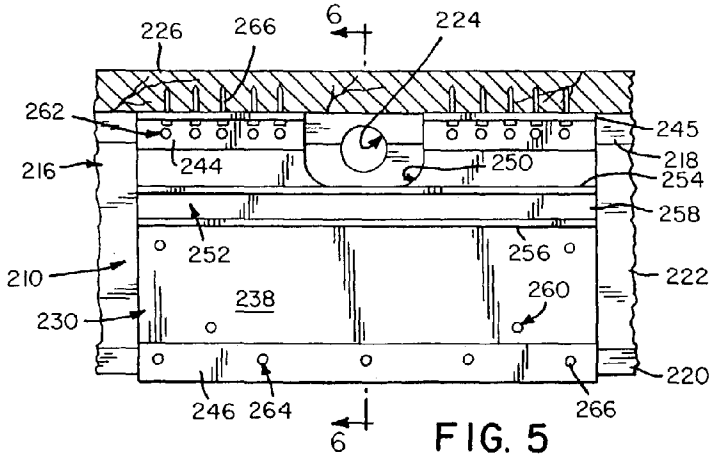

FIG. 5

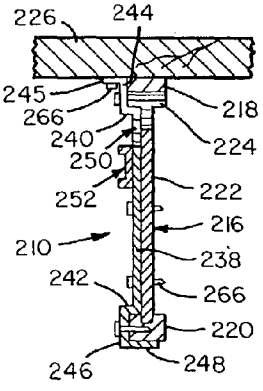

FIG. 6

FIG. 7

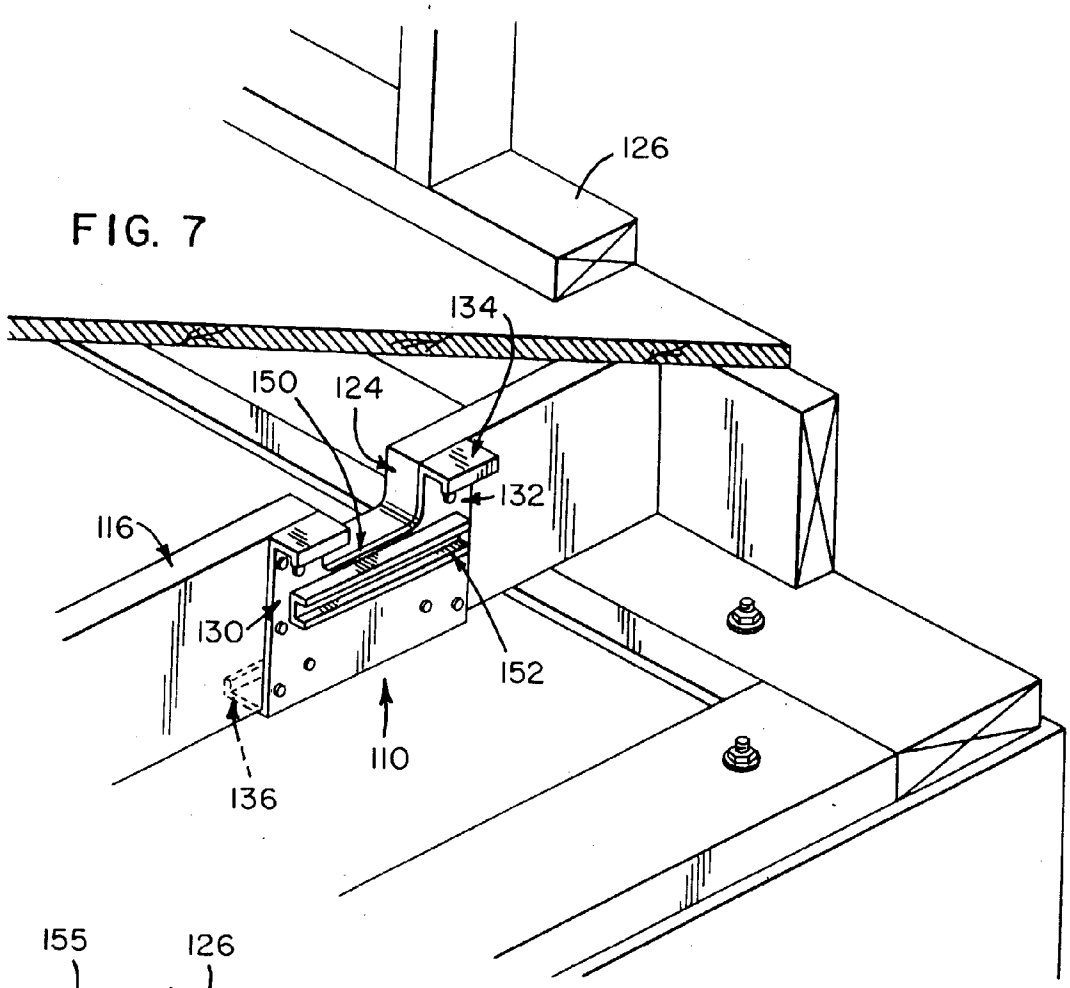

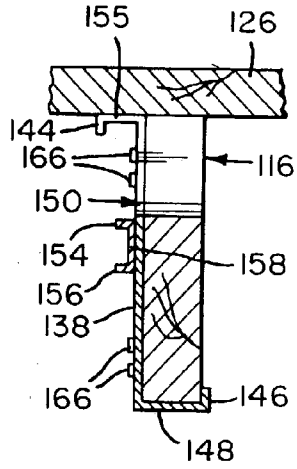

FIG. 9

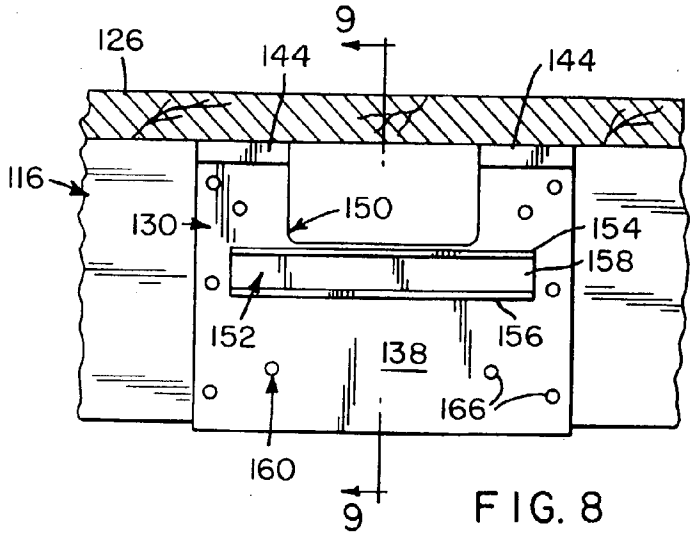

FIG. 8

JOIST REINFORCING BRACKET

CONTINUING APPLICATION DATA

[0001] This application is a continuation-in-part of a U.S. patent application, Ser. No. 09/796,531, filed on Mar. 2, 2001.

FIELD OF THE INVENTION

[0002] The present invention relates generally to static structures and, more particularly, to openwork brackets formed of sheet materials.

BACKGROUND OF THE INVENTION

[0003] Floor systems comprise the horizontal supporting surfaces of a building structure. Such floor systems not only support the contents of a building but also carry their own weight and any extra load from floors and walls above. To avoid collapse, a floor system must transfer loads laterally to beams, columns, or bearing walls with an adequate margin of safety.

[0004] In some buildings, a floor system is assembled from wooden joists overlaid with plywood sheathing. The dimensions of the lumber utilized may be varied somewhat and the floor system will still meet accepted standards for safety. Of course, holes or cavities within the floor system must be considered in determining the proper lumber dimensions.

[0005] For a variety of reasons, it is best to run utility conduits parallel to floor joists. Under certain conditions, however, conduits must run perpendicular to, and penetrate, joists. Local building codes strictly limit the size and location of any cutouts that are placed in joists for the passage of conduits. These codes have resulted largely in builders being required to "oversize" joists thereby adding cost and waste to many building projects.

[0006] In U.S. Pat. No. 5,519,977, we disclosed an uncomplicated bracket acting as a "patch kit" to return a wooden joist having a transverse hole to its original strength. Since the issuance of that patent, a need has arisen for a bracket capable of reinforcing a joist with a notch cut into its top. A notch, it has been found, is sometimes required to accommodate the passage of a conduit servicing a plumbing fixture or like item is located directly above a joist. Without reinforcement, the notch may compromise the structural integrity of the joist.

SUMMARY OF THE INVENTION

[0007] In view of the foregoing need, it is a principal object of this particular invention to provide a bracket for reinforcing a wooden joist with a notch cut into its top. The bracket can be attached to dimension lumber or composite materials such as joists having top and bottom flanges joined by an oriented strand board web. In any case, the bracket is easily attached using conventional hand tools and conventional fasteners by laborers with minimal training.

[0008] It is another object of the invention to provide a joist reinforcing bracket of the type described that has a high strength yet is uncomplicated in construction. The bracket preferably has only two principal components that are fastened together prior to distribution and use.

[0009] It is an object of the invention to provide improved elements and arrangements thereof in a joist reinforcing bracket for the purposes described which is lightweight in construction, inexpensive to manufacture, and fully dependable in use.

[0010] Briefly, the preferred bracket in accordance with this invention achieves the intended objects by featuring a base wall and a first intermediate wall extending forwardly from the top of the base wall. A second intermediate wall extends forwardly from the bottom of the base wall. A first front wall extends upwardly from the front of the first intermediate wall. A second front wall extends downwardly from the front of the second intermediate wall. The base wall has a notch in its top. The notch extends upwardly through the first intermediate wall and the first front wall thus bifurcating the first intermediate wall and the first front wall. A brace is secured to the base wall beneath the notch.

[0011] The foregoing and other objects, features and advantages of the present invention will become readily apparent upon further review of the following detailed description of the preferred embodiments as illustrated in the accompanying drawings.

BRIEF DESCRIPTION OF THE DRAWINGS

[0012] The present invention may be more readily described with reference to the accompanying drawings, in which:

[0013] **FIG. 1** is a perspective view of a joist reinforcing bracket in accordance with the present invention positioned within a floor system.

[0014] **FIG. 2** is a front view of the joist reinforcing bracket of **FIG. 1**.

[0015] **FIG. 3** is a cross-sectional view taken along line **3-3** of **FIG. 2**.

[0016] **FIG. 4** is a perspective view of an alternative joist reinforcing bracket in accordance with the present invention positioned within a floor system.

[0017] **FIG. 5** is a front view of the joist reinforcing bracket of **FIG. 4**.

[0018] **FIG. 6** is a cross-sectional view taken along line **6-6** of **FIG. 5**.

[0019] **FIG. 7** is a perspective view of another alternative joist reinforcing bracket in accordance with the present invention positioned within a floor system.

[0020] **FIG. 8** is a front view of the joist reinforcing bracket of **FIG. 7**.

[0021] **FIG. 9** is a cross-sectional view taken along line **9-9** of **FIG. 8**.

[0022] Similar reference characters denote corresponding features consistently throughout the accompanying drawings.

DETAILED DESCRIPTION OF THE PREFERRED EMBODIMENTS

[0023] Referring now to **FIGS. 1 through 3**, a joist reinforcing bracket **10** is shown in use with a conventional floor system. Floor system includes a header **12** supported at

a fixed height by a base wall **14**. A composite joist **16** formed of wood extends laterally from header **12** to a remote support (not shown). Joist **16** comprises a top flange **18** and a bottom flange **20** joined together by a web **22** in the manner of an I-beam. A notch **24** is cut through top flange **18** and into web **22** for the passage of one or more utility conduits (not shown). Atop header **12** and joist **16** is secured a plywood subfloor **26** for carrying one or more wall frames **28**.

[**0024**] Although only one joist **16** is illustrated in **FIG. 1**, it should be understood that additional joists **16** would typically be used in the construction of a floor system. In such a system, a number of like joists **16** would be positioned along header **12** about 16 to 24 inches apart and a number of brackets **10** would be employed adjacent the notch **24** provided in each of the joists **16** for the passage of a conduit. Obviously, any number of brackets **10** may be secured to a single joist **16** for the passage of conduits at different locations.

[**0025**] Bracket **10** includes a body **30**, formed of 18-gage, galvanized steel sheeting, having a central portion **32** joining an upper portion **34** and a lower portion **36** together. Central portion **32** is defined by a planar, base wall **38**. Upper portion **34**, however, has an intermediate wall **40** extending forwardly from the top of base wall **38** and a front wall **44** extending upwardly from the front of intermediate wall **40**. Lower portion **36** has an intermediate wall **42** extending forwardly from the bottom of base wall **38**, a front wall **46** extending downwardly from the front of intermediate wall **42**, and also has a rearwardly-extending, bottom wall **48** being secured to the bottom of front wall **46**. The right angle connections between adjacent walls **38-48** provide bracket **10** with great rigidity.

[**0026**] Body **30** has a notch **50** sized like notch **24** in joist **16** to accommodate the passage of mechanical and electrical conduits. Notch **50** extends downwardly from the top of front wall **44** through intermediate wall **40** and into the top of base wall **38**. Notch **50** has a rectangular outline for ease of construction but may be provided with any desired outline.

[**0027**] Positioned beneath notch **50** is a brace **52** formed of 18-gage galvanized steel sheeting. Brace **52** includes a pair of forwardly-extending, interior walls **54** and **56** joined by a back wall **58** into a C-shape. Back wall **58** is welded to base wall **38** with interior walls **54** and **56** being oriented parallel to intermediate walls **40** and **42**. Interior and back walls **54-58** being coextensive, brace **52** extends substantially the entire length of bracket **10**.

[**0028**] A plurality of small holes **60**, **62** and **64** are provided in body **30** that permit the passage of penetrating-type fasteners like screws or nails **66** to fasten bracket **10** to joist **16**. Adjacent notch **50** and brace **52**, a number of holes **60** are provided in base wall **38**. Similarly, holes **62** are provided in front wall **44** on opposite sides of notch **50**. Holes **64** are likewise provided along the length of front wall **46**.

[**0029**] Should it be desired that bracket **10** be permanently affixed to joist **16**, a layer of adhesive cement (not shown) may be applied to the rear surfaces of base and front walls **38**, **44** and **46**, the top surfaces of intermediate and bottom walls **40** and **48**, and the bottom surface of intermediate wall **42** prior to their positioning adjacent joist **16**. If adhesive cement of sufficient strength is used, it may be possible to install bracket **10** without any screws or nails **66**. Thus, holes **60-64** may be omitted from body **30**.

[**0030**] Referring now to FIGS. **4-6**, an alternative embodiment of the joist reinforcing bracket is illustrated generally at **210**. Bracket **210** includes elements that correspond generally with those of bracket **10** described above. Bracket **210** has, however, been modified so as to be stiffer than bracket **10** and to be attached with greater strength to a floor system including a header **212** supported by a base wall **214**. The floor system also has a composite joist **216**, having a top flange **218** and a bottom flange **220** joined by a web **222**, extending from header **212**. A notch **224** passes through top flange **218** and into web **222** for the passage of utility conduits (not shown). Atop header **212** and joist **216** is a subfloor **226** carrying at least one wall frame **228**.

[**0031**] Bracket **210** includes a body **230** having a central portion **232** joining an upper portion **234** and a lower portion **236**. Central portion **232** has a planar, base wall **238**. Upper portion **234**, however, has an intermediate wall **240** extending forwardly from the top of base wall **238**, a front wall **244** extending upwardly from the front of intermediate wall **240**, and a top wall **245** extending forwardly from the top of front wall **244**. Lower portion **236** has an intermediate wall **242** extending forwardly from the bottom of base wall **238**, a front wall **246** extending downwardly from the front of intermediate wall **242**, and also has a rearwardly-extending, bottom wall **248** being secured to the bottom of front wall **246**. The right angle connections between adjacent walls **238-248** provide bracket **210** with great rigidity.

[**0032**] Body **230** has a notch **250** sized to outline notch **224** in joist **216** to accommodate the passage of mechanical and electrical conduits through notch **224**. Notch **250** extends downwardly from the top of top wall **245**, through front wall **244** and intermediate wall **240**, and into the top of base wall **238**. Notch **250** has a rectangular outline.

[**0033**] Positioned beneath notch **250** is a brace **252** formed of 18-gage galvanized steel sheeting. Brace **252** includes a pair of forwardly extending, interior walls **254** and **256** joined by a back wall **258** into a C-shape. Back wall **258** is welded to base wall **238** with interior walls **254** and **256** being oriented parallel to walls **240**, **242**, **245** and **248**. Interior and back walls **254**, **256** and **258** are coextensive, and brace **252** extends the entire length of base wall **238**.

[**0034**] A plurality of small holes **260**, **262**, **264** and **265** are provided in body **230** that permit the passage of penetrating-type fasteners like screws or nails **266** to fasten bracket **210** to joist **216**. Adjacent notch **250** and brace **252**, a number of holes **260** are provided in base wall **238**. Similarly, holes **262** are provided in front wall **244** on opposite sides of notch **250**. Holes **264** are likewise provided along the length of front wall **246**. Holes **265** are provided along the length of top wall **245**. Holes **260-265** can be omitted if bracket **210** is to be attached to joist **216** by means of adhesive cement.

[**0035**] Referring now to FIGS. **7-9**, another alternative embodiment of the joist reinforcing bracket is illustrated generally at **110**. Bracket **110** includes elements that correspond generally to those of bracket **10** described above. Here, however, bracket **110** has been modified so as to be stiffer and so as to closely engage a joist **116** that is rectangular in cross section rather than I-shaped in cross section.

[0036] Bracket **116** includes a body **130** being formed of steel sheeting and having an S-shaped cross section. Body **130** has a central portion **132** joining an upper portion **134** and a lower portion **136**. Central portion **132** has a planar, base wall **138** to which is welded a brace **152** of C-shaped cross section. Extending forwardly at right angles from the top of base wall **138** is a top wall **155** being one part of upper portion **134**. Upper portion **134** also includes a forward wall **144** extending downwardly at right angles from the front of top wall **155**. Lower portion **136** has a bottom wall **148** extending rearwardly at right angles from the bottom of base wall **138** and a rearward wall **146** extending upwardly at right angles from the rear of bottom wall **148**. Thus, body **130** omits the intermediate and front walls **40-46** of body **30**.

[0037] Body **130** has a notch **150** of rectangular outline for the passage of one or more conduits. Notch **150** extends downwardly through top wall **155** and forward wall **144** and into the top of base wall **138**. As shown, top and forward walls **155** and **144** are fully bifurcated by notch **150**.

[0038] Brace **152**, formed of steel sheeting, is positioned beneath notch **150**. Brace **152** has a pair of forwardly-extending, interior walls **154** and **156** joined by a back wall **158** into a C-shape. Back wall **158** is welded to base wall **138** with interior walls **154** and **156** being oriented parallel to top wall **155** and bottom wall **148**. Preferably, brace **152** extends substantially the length of bracket **110**.

[0039] A number of small holes as at **160** are provided in body **130** to permit the passage of screws or nails **166** to fasten bracket **110** to joist **116**. The holes **160** are positioned in base wall **138** around notch **150** and brace **152** so that a strong bond between joist **116** and bracket **110** can be obtained. Adhesives can also be used to increase the strength of said bond.

[0040] Use of the invention will be described in relation to bracket **110** and joist **116** with the use of brackets **10** and **210** being substantially identical. First, a notch **124** is cut in joist **116** of sufficient size to accommodate a conduit (not shown). Next, bracket **110** is positioned so that: 1) lower portion **136** wraps around the bottom of joist **116**, 2) center portion **132** is flush against the front of joist **116** with notch **124** being centered in the middle of notch **150**, and 3) upper portion **134** extends away from joist **116** and is positioned to abut the bottom of plywood subfloor **126**. Then, nails **166** are driven through holes **160** into joist **116** to secure bracket **110** thereto. The bracket attachment process requires just a few minutes to complete and can be accomplished by unskilled laborers using conventional tools.

[0041] When any of brackets **10**, **110** or **210** is properly installed on a joist having a notch as described above, the joist will be reinforced to be at least equal in load-bearing capacity to that of a similarly dimensioned joist that lacks a notch. Since a reinforced joist obtains its principal strength from the inventive bracket, a notch may be provided virtually anywhere in the joist without a reduction of its load-bearing capacity.

[0042] From the foregoing, it should be apparent that brackets **10**, **110** and **210** provide builders with great flexibility in positioning conduits within floor systems assembled with wooden joists. It should be noted also that by using brackets **10**, **110** and **210** in situations where notches are present, wooden joists with somewhat smaller dimensions than would otherwise be permitted by local building codes might be employed. Thus, inventive brackets **10**, **110** and **210** contribute to the conservation of wood while simultaneously reducing building costs.

[0043] While the invention has been described with a high degree of particularity, it will be appreciated by those skilled in the art that modifications may be made thereto. For example, bracket **110** could be provided with holes in top wall **155** in the manner shown in bracket **210** for a more secure fastening to subfloor **126**. Therefore, it is to be understood that the present invention is not limited to the various embodiments described above, but encompasses any and all embodiments within the scope of the following claims.

We claim:

1. A bracket for reinforcing a wooden joist, comprising:

a body including:

a central portion having a base wall for positioning against one side of a wooden joist, said base wall having a notch in the top thereof;

an upper portion being integrally formed with said central portion, said upper portion having a first wall being secured to and extending forwardly from the top of said base wall and a second wall being secured to and extending at right angles from the front of said first wall, said notch extending upwardly through said first wall and said second wall so as to bifurcate said first wall and said second wall; and,

a lower portion being integrally formed with said central portion, said lower portion having a third wall being secured to and extending at right angles from the bottom of said base wall and a fourth wall being secured to and extending at right angles from said third wall; and,

a brace being rigidly affixed to said base wall beneath said notch.

2. The bracket according to claim 1 wherein said body further includes a plurality of holes positioned about said notch and said brace for the snug passage of penetrating fasteners.

3. The bracket according to claim 1 wherein said second wall extends upwardly from said first wall, said third wall extends forwardly from said base wall, and said fourth wall extends downwardly from the front of said third wall.

4. The bracket according to claim 3 further comprising a fifth wall secured to and extending rearwardly at right angles from the bottom of said fourth wall.

5. The bracket according to claim 3 further comprising a sixth wall secured to and extending forwardly at right angles from the top of said second wall.

6. The bracket according to claim 1 wherein said second wall extends downwardly from said first wall, said third wall extends rearwardly from said base wall, and said fourth wall extends upwardly from the rear of said third wall.

7. The bracket according to claim 1 wherein said brace includes a pair of forwardly-extending, interior walls joined together by a back wall into a C-shape, said back wall being rigidly affixed to said base wall.

8. A bracket, comprising:

a body including:

a base wall;

a first intermediate wall extending forwardly from the top of said base wall;

a second intermediate wall extending forwardly from the bottom of said base wall;

a first front wall extending upwardly from the front of said first intermediate wall;

a second front wall extending downwardly from the front of said second intermediate wall;

said base wall having a notch in the top thereof, said notch extending upwardly through said first intermediate wall and said first front wall bifurcating said first intermediate wall and said first front wall; and,

a brace being rigidly affixed to said base wall beneath said notch.

9. The bracket according to claim 8 further comprising a bottom wall extending rearwardly from the bottom of said second front wall.

10. The bracket according to claim 8 further comprising a top wall extending forwardly from the top of said first front wall.

11. The bracket according to claim 8 wherein at least one of said base wall, said first front wall, and said second front wall has a plurality of holes for the snug passage of penetrating-type fasteners.

12. The bracket according to claim 8 wherein said brace includes a pair of forwardly-extending, interior walls joined together by a back wall, said back wall being rigidly affixed to said base wall.

13. A bracket, comprising:

a body including:

a base wall;

a top wall extending forwardly from the top of said base wall;

a forward wall extending downwardly from the front of said top wall;

a bottom wall extending rearwardly from the bottom of said base wall;

a rearward wall extending upwardly from the rear of said bottom wall;

said base wall having a notch in the top thereof, said notch extending upwardly through said top wall and said forward wall bifurcating said top wall and said forward wall; and,

a brace being rigidly affixed to said base wall beneath said notch.

14. The bracket according to claim 13 wherein said base wall has a plurality of holes for the snug passage of penetrating-type fasteners.

15. The bracket according to claim 13 wherein said brace includes a pair of forwardly-extending, interior walls joined together by a back wall, said back wall being secured to said base wall.

* * * * *