W. WAGNER.

SHUT-OFF HEAD FOR CASINGS AND THE LIKE.

APPLICATION FILED JUNE 27, 1911.

1,038,244. Patented Sept. 10, 1912.

2 SHEETS—SHEET 1.

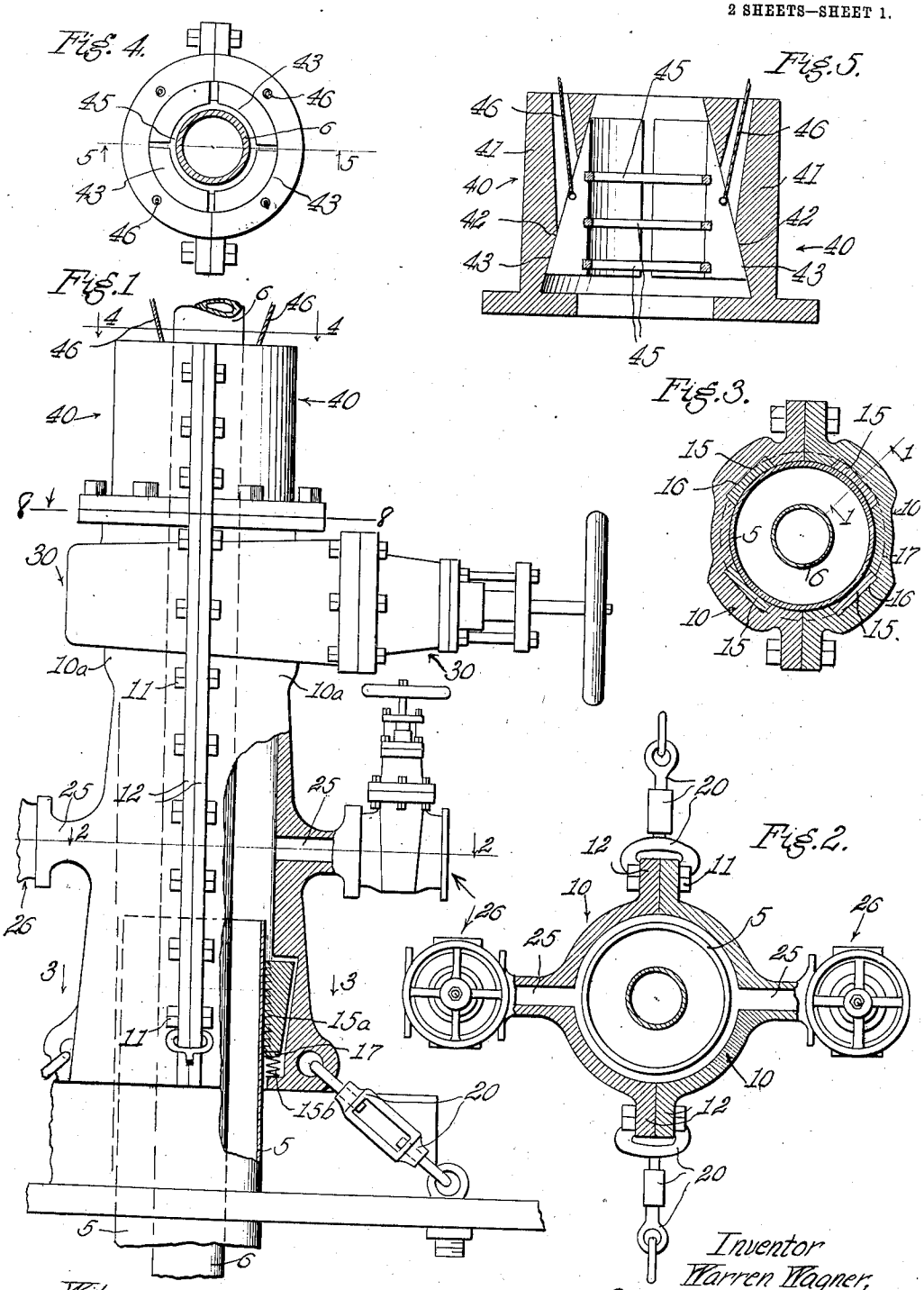

Witnesses.
Elwood H. Barbelin
B. McNordie

Inventor
Warren Wagner,
by James T. Barkelew
his Attorney.

W. WAGNER.

SHUT-OFF HEAD FOR CASINGS AND THE LIKE.

APPLICATION FILED JUNE 27, 1911.

1,038,244.

Patented Sept. 10, 1912.

2 SHEETS—SHEET 2.

Fig. 6

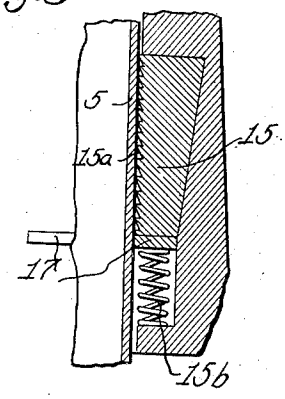

Fig. 7.

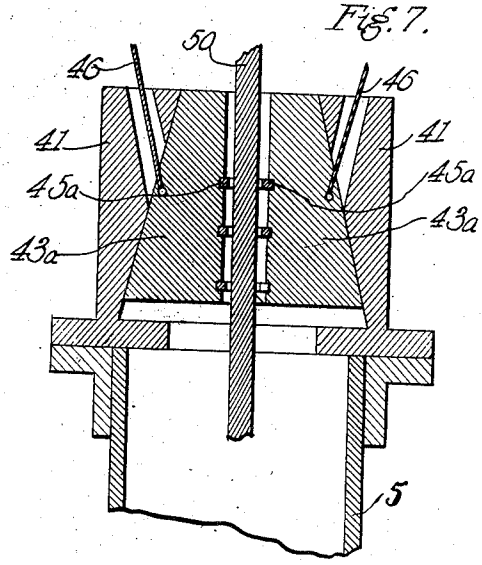

Fig. 8.

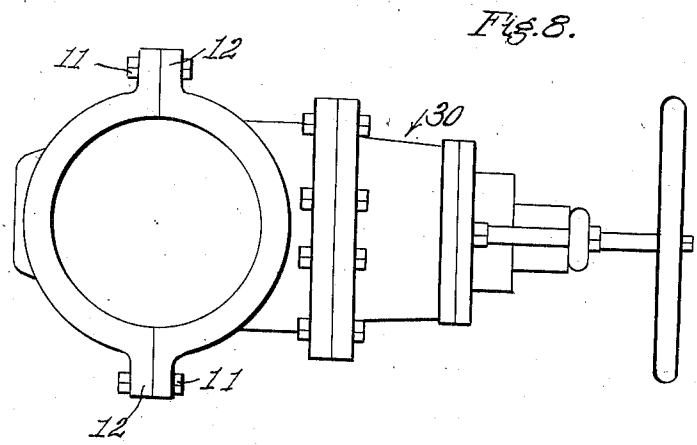

Witnesses.

Elwood H. Barkelew

B. McNordie

Inventor

Warren Wagner

by James T. Barkelew

his Attorney.

UNITED STATES PATENT OFFICE.

WARREN WAGNER, OF PETROLIA, TEXAS.

SHUT-OFF HEAD FOR CASINGS AND THE LIKE.

1,038,244. Specification of Letters Patent. Patented Sept. 10, 1912.

Application filed June 27, 1911. Serial No. 635,565.

To all whom it may concern:

Be it known that I, WARREN WAGNER, a citizen of the United States, residing at Petrolia, in the county of Clay, State of Texas, have invented new and useful Improvements in Shut-Off Heads for Casings and the Like, of which the following is a specification.

This invention relates to a device particularly adapted for use as a casing head for wells, particularly oil wells; but it will be seen that it is adapted for use in any situation where it is desired to control fluid flowing out of the end of a casing or pipe, and particularly where it is desired to carry on operations within the pipe from the end and at the same time to prevent the flow of fluid therefrom. Although I do not restrict myself to this particular use, I have shown my device as in use on the upper end of a well casing with drilling operations going on there-through, showing typically the use of a drilling pipe as used with a rotary drilling rig and the use of a drilling cable as with a "standard" rig.

The specific object of my invention is the provision of a novel means for packing around a drill pipe or cable so that they may be operated within the well casing even while there is great gas or liquid pressure therein.

The specific features of this packing device, and its use in combination with the other elements of my well shut-off will be understood from the following specification and the accompanying drawings, in which:

Figure 1 is an elevation of my device as applied to a well casing and a rotary drilling outfit, with certain parts in section as on line 1—1 of Fig. 3. Fig. 2 is a cross section taken on line 2—2 of Fig. 1. Fig. 3 is a cross section taken on line 3—3 of Fig. 1. Fig. 4 is a plan view taken as indicated by line 4—4 of Fig. 1. Fig. 5 is a section taken on line 5—5 of Fig. 4. Fig. 6 is an enlarged sectional detail taken on line 1—1 of Fig. 3. Fig. 7 is a view showing parts similar to those shown in Fig. 5 in use for a drilling cable. Fig. 8 is a plan view taken as indicated by line 8—8 of Fig. 1.

In the drawings 5 designates a pipe, shown as the casing of a well, from the end of which the flow of fluid is wished to be controlled. This pipe may be any fluid pipe, but I have shown it in the present case as a well casing and I have shown a drill pipe 6 extending vertically through the casing and adapted to be used in the ordinary rotary manner to drill a well. This drill pipe is typical of any cylindrical moving member, such as a drilling line, which may be used inside of casing 5.

The body of my device is comprised in two semi-cylindrical members 10 which are secured together by means of bolts 11 passing through flanges 12. It is preferable to make the body in two halves in this manner in order that it may be easily secured around the upper end of the casing without having to be placed over the end; placement over the end being sometimes difficult when fluid is flowing from the pipe. In their lower interior parts these members 10 are provided with slips 15 which move on downwardly convergent surfaces 16 so that, by the upward movement of the members or the downward movement of the slips, they move inwardly and their teeth 15^a engage more closely with the casing 5. At the lower ends of these slips a circular packing ring 17 is provided which engages with the casing to prevent any flow of fluid through the space between the casing and members 10. Springs 15^b are employed to hold the slips normally in their upper position. Members 10 when assembled provide a cylindrical housing which completely houses the upper end of the casing and extends some distance above the end. They are held down by means of anchor rods 20; that is, they are held from being moved clear off the end of the casing, enough movement being allowed to move the members 10 upwardly so as to engage the slips 15 tightly with the casing. Each member 10 is provided with a side outlet 25 which is controlled by a valve 26, and these outlets may be used to allow the controlled escape of fluid from the end of casing 5 either during drilling operations or at any other time. For instance, if the device is used to cap a well when the well is flowing and is otherwise uncontrollable, these valves will allow the escape of fluid into pipes and thence to reservoirs where the fluid, such as oil, may be stored. The upper ends of members 10 are provided with portions 10^a which form the casing of a large valve 30. Valve

30 is of a size allowing a greater opening than the opening through casing 5, so that, when the valve is opened, any fluid which is passing out of the end of casing 5 may freely pass through the valves.

For capping a flowing well the device as so far described is placed upon the end of the casing and the valve 30 gradually shut off. As the valve is shut off the fluid pressure gradually is exerted to press the whole device upwardly and as the pressure increases the slips 15 engage more tightly with the upper end of the casing and hold the whole device from upward movement. When the valve has been entirely shut off, then the fluid may be controllably discharged through small valves 26 or it may be controllably discharged through large valve 30.

For drilling operations a packer 40 is mounted on the upper flanges of valve 30. Packer 40 is merely for the purpose of allowing the passage of drill pipe 6 (or the drill rope), or any other similar member, within the casing without allowing the flow of fluid out through the top of the device. Packer 40 consists of a ring 41 with upwardly convergent inner surfaces 42 on which slips 43 are mounted. Ring 41 may be either composed of two halves secured together by flanges and bolts as illustrated, or it may be made in one solid piece. Slips 43 are preferably of such a size that when they are contracted to engage with pipe 6 they will be in edge engagement with each other and will prevent the flow of fluid between them. In Figs. 4 and 5 I have shown the slips as not up into their tight position and therefore as allowing passage between them. The slips are provided with circular packing rings 45 which may be of any desired substance; and these rings may be continuous so as to effect a continuous circular packing around the pipe 6, or at least, if not continuous not have breaks near the juncture of the different slips. Cables 46, or other equivalent means, are provided for pulling slips 43 up and causing them to move inwardly into engagement with the pipe 6, the fluid pressure against their lower ends then causing them to move upwardly and to engage the pipe tightly to prevent the passage of fluid out around the pipe. I have shown these slips of sufficient inner diameter to engage a drill pipe of ordinary size, but they may be of such diameter as to engage a tubing or a pumping rod or a drilling cable just as circumstances require. This arrangement is shown in Fig. 7. Here I have shown the use of my packer device mounted directly on the upper end of the casing and equipped with slips 43^a and packing 45^a which engages with the drill cable 50 when the slips are pulled or pushed upwardly by cables 46 or by pressure from the well. In this situation the packer prevents the passage of gas or oil out of the well while drilling. This is a very desirable feature, as the gas coming out of a well often prevents the drilling process being carried on. My device will prevent the escape of gas and allow the well to be drilled just as if there were no gas present.

As before noted, for drilling operations with a rotary rig, the packer 40 is provided with means for engaging the drill pipe. In the ordinary rotary drilling operation water is pumped down through the inner pipe and is allowed to rise through the outer casing and then passes out through openings 25, the water being allowed to stand and its material carried in suspension allowed to settle before it is again pumped down through pipe 6. It will be seen that my device allows such operations to be carried on and that it becomes an efficient cap for the well in case fluid at great pressure is struck in the drilling operations. At times the pressure of oil or gas becomes enormous and it requires a device of great strength and holding power to control the pressure. (For this reason I have shown the valves made integrally with the body). In my device the pressure itself causes parts to be held more firmly and to hold the fluid from escape. These, then, are the features which I wish to claim in a broad sense. The change of parts to apply my device to the "standard" rig I conceive as coming within the broad scope of this invention; making my device one capable of universal application.

Having described my invention, I claim:

1. A packer for the drill rod of oil wells and the like, comprising an annular casing adapted to be secured to the upper end of the well casing and having an upwardly converging inner wall, in combination with segmental slips loosely disposed within the casing and having upwardly converging outer faces and inner arcuate faces to surround the drill rod.

2. A packer for the drill rod of oil wells and the like, comprising an annular casing adapted to be secured to the upper end of the well casing and having an upwardly converging inner wall, in combination with segmental slips loosely disposed within the casing and having upwardly converging outer faces and inner arcuate faces to surround the drill rod, and means whereby to temporarily lift the slips within the casing to cause the same to be carried inwardly by the converging wall of the casing.

3. A packer for the drill rod of oil wells and the like, comprising an annular casing adapted to be secured to the upper end of the well casing and having an upwardly converging inner wall, in combination with segmental slips loosely disposed within the casing and having upwardly converging

outer faces and inner arcuate faces, the said slips adapted to surround the drill rod, packing rings disposed about the drill rod within the space inclosed by the arcuate faces of the slips, and means whereby to temporarily lift the slips within the casing to cause the same to be carried inwardly by the converging wall of the casing.

In witness that I claim the foregoing I have hereunto subscribed my name this 21 day of June 1911.

WARREN WAGNER.

Witnesses:
P. E. GIBBONEY,
E. COMBS.