US 20240266771A1

(19) United States

(12) Patent Application Publication (10) Pub. No.: US 2024/0266771 A1

WI et al. (43) Pub. Date: Aug. 8, 2024

(54) TERMINAL

(71) Applicants: AUTONETWORKS TECHNOLOGIES, LTD., Mie (JP); SUMITOMO WIRING SYSTEMS, LTD., Mie (JP); SUMITOMO ELECTRIC INDUSTRIES, LTD., Osaka (JP)

(72) Inventors: Nungna WI, Mie (JP); Teruo HARA, Mie (JP); Hiroki KOBAYASHI, Mie (JP); Takae IMAYOSHI, Mie (JP)

(21) Appl. No.: 18/567,003

(22) PCT Filed: May 13, 2022

(86) PCT No.: PCT/JP2022/020198

§ 371 (c)(1),
(2) Date: Dec. 4, 2023

(30) Foreign Application Priority Data

Jun. 22, 2021 (JP) 2021-103267

Publication Classification

(51) Int. Cl.
H01R 13/11 (2006.01)

(52) U.S. Cl.
CPC *H01R 13/113* (2013.01)

(57) ABSTRACT

A rectangular tube portion includes a first wall provided with the resilient contact piece, a second wall provided with the receiving portion and a pair of side walls connecting both side edges of the first wall and both side edges of the second wall. A facing direction of the pair of side walls is a first direction. At least one of the pair of side walls includes a resilient piece for suppressing a movement of the tab in the first direction by pressing a side edge of the tab inwardly of the rectangular tube portion 11 in the first direction. The rectangular tube portion includes a stopper portion for suppressing a movement of a tip part of the resilient piece inwardly of the rectangular tube portion in the first direction. The resilient piece includes a contact portion disposed to face the stopper portion in the first direction.

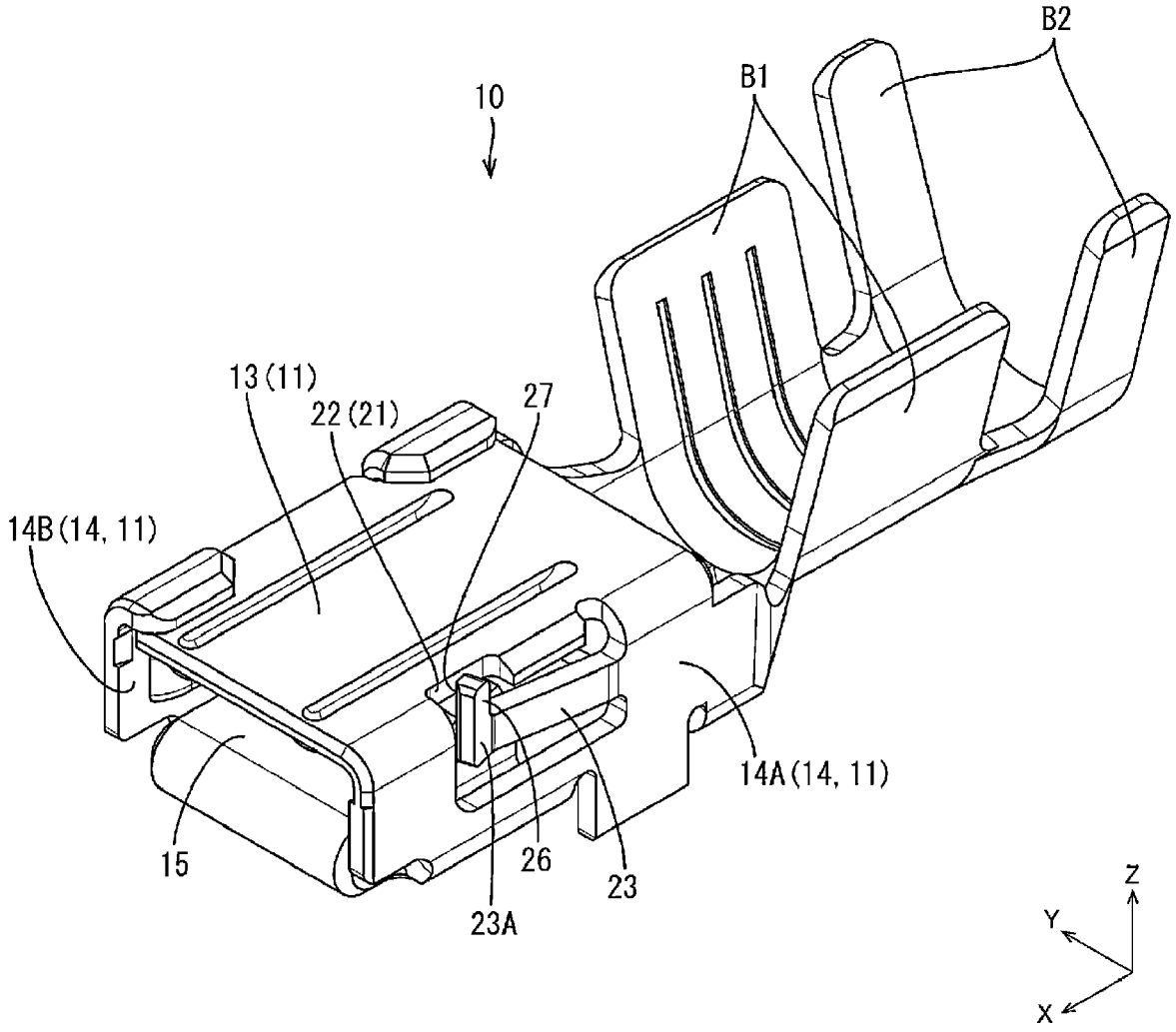

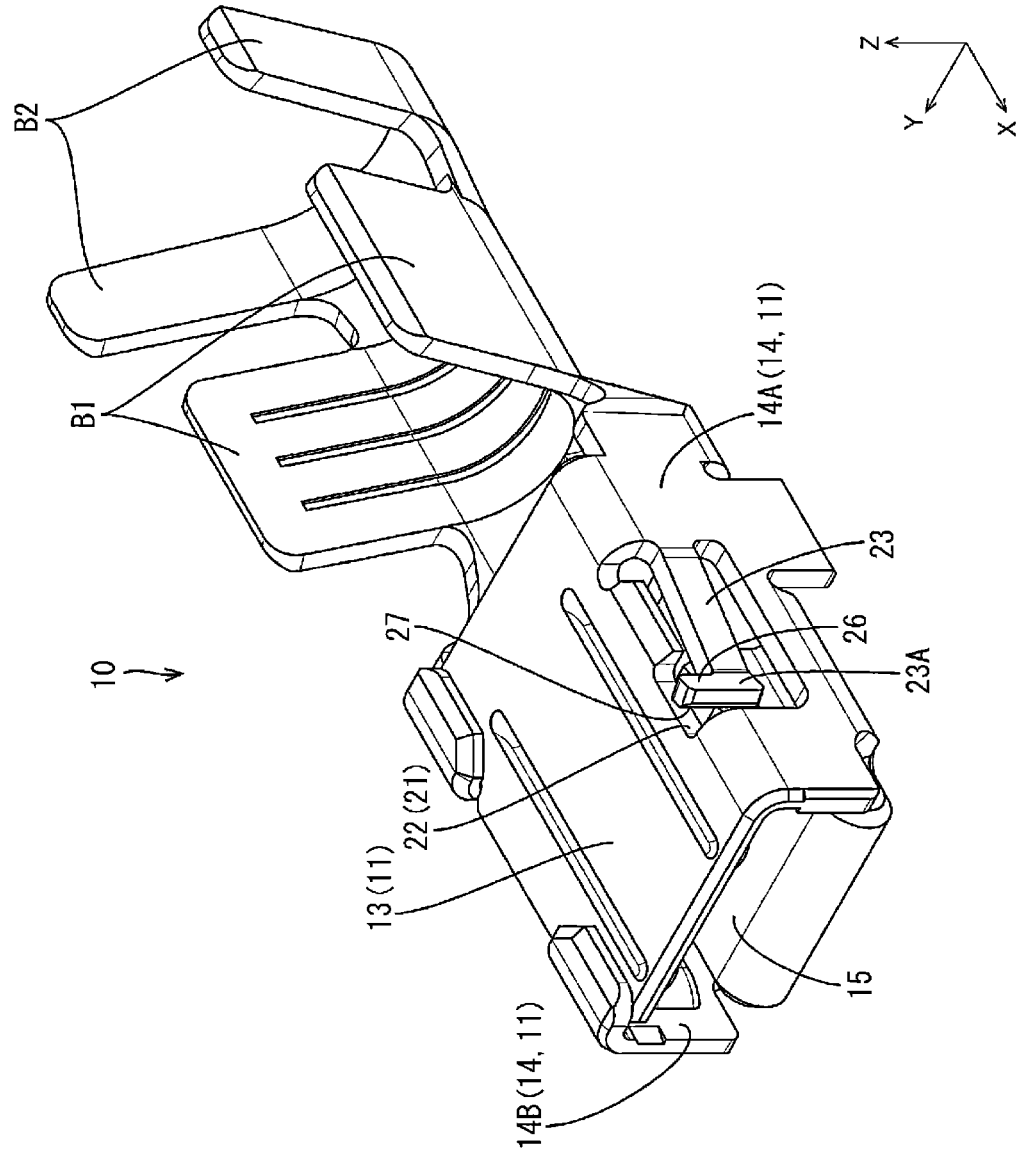

FIG. 1

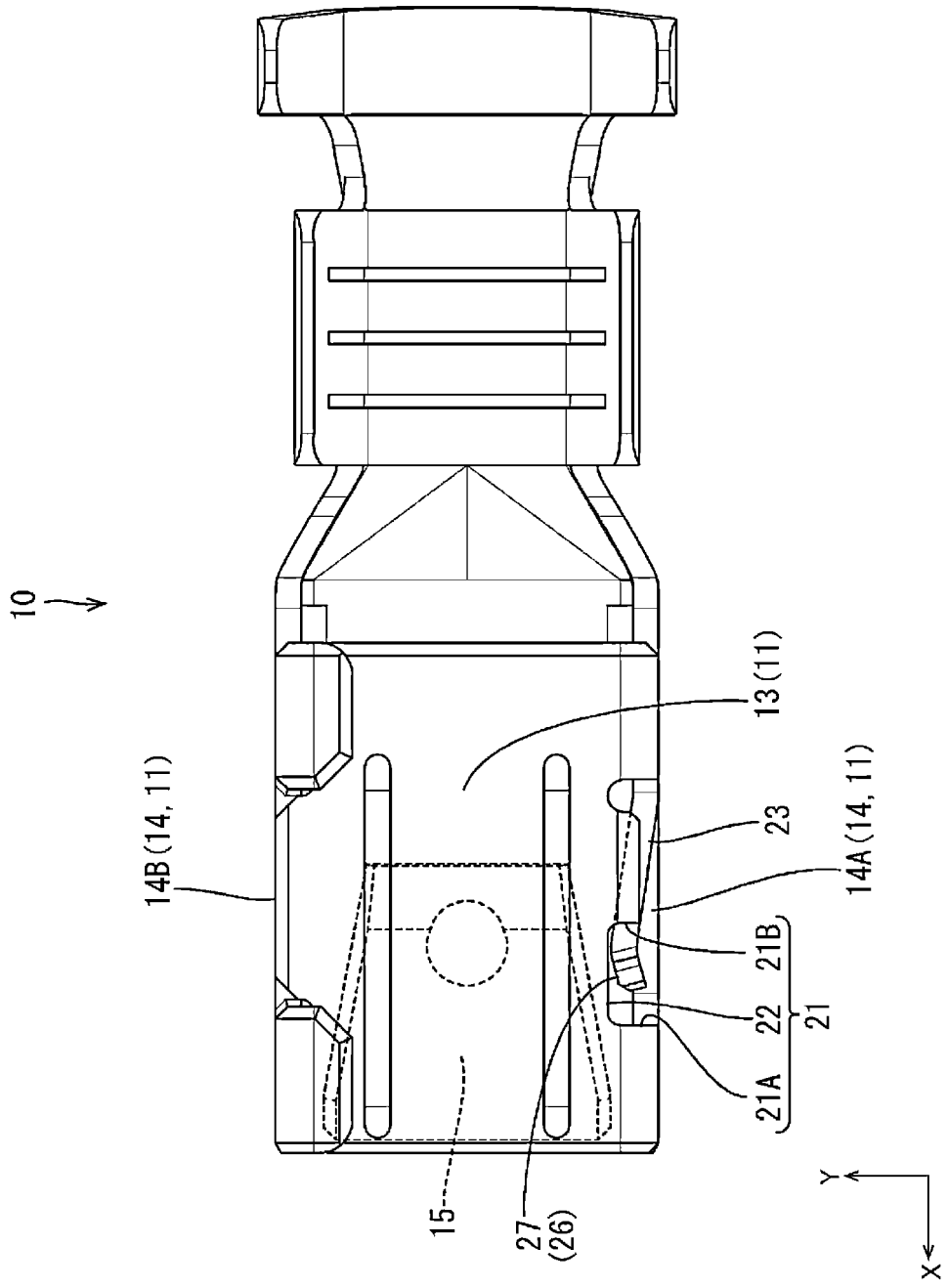

FIG. 2

FIG. 3

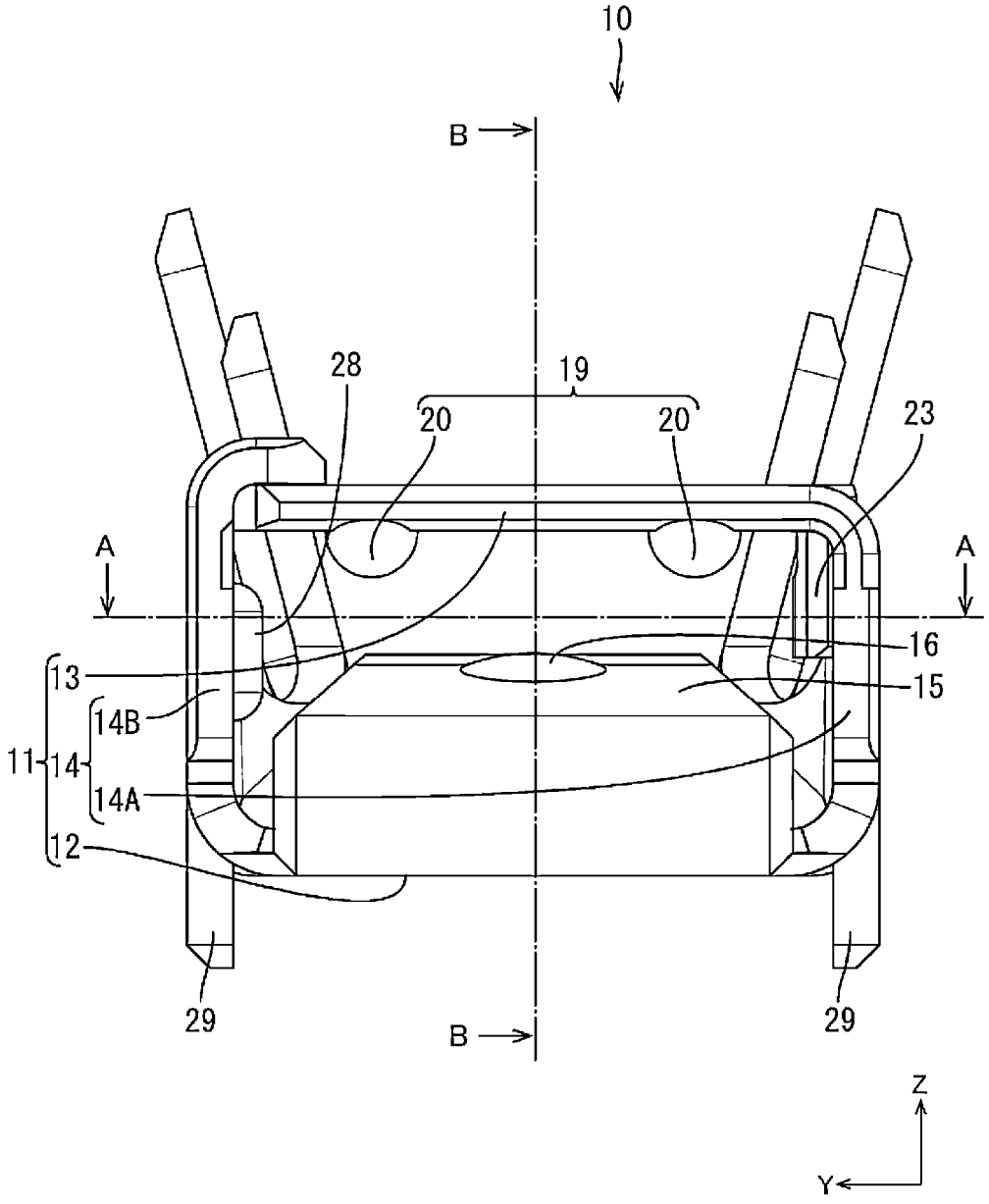

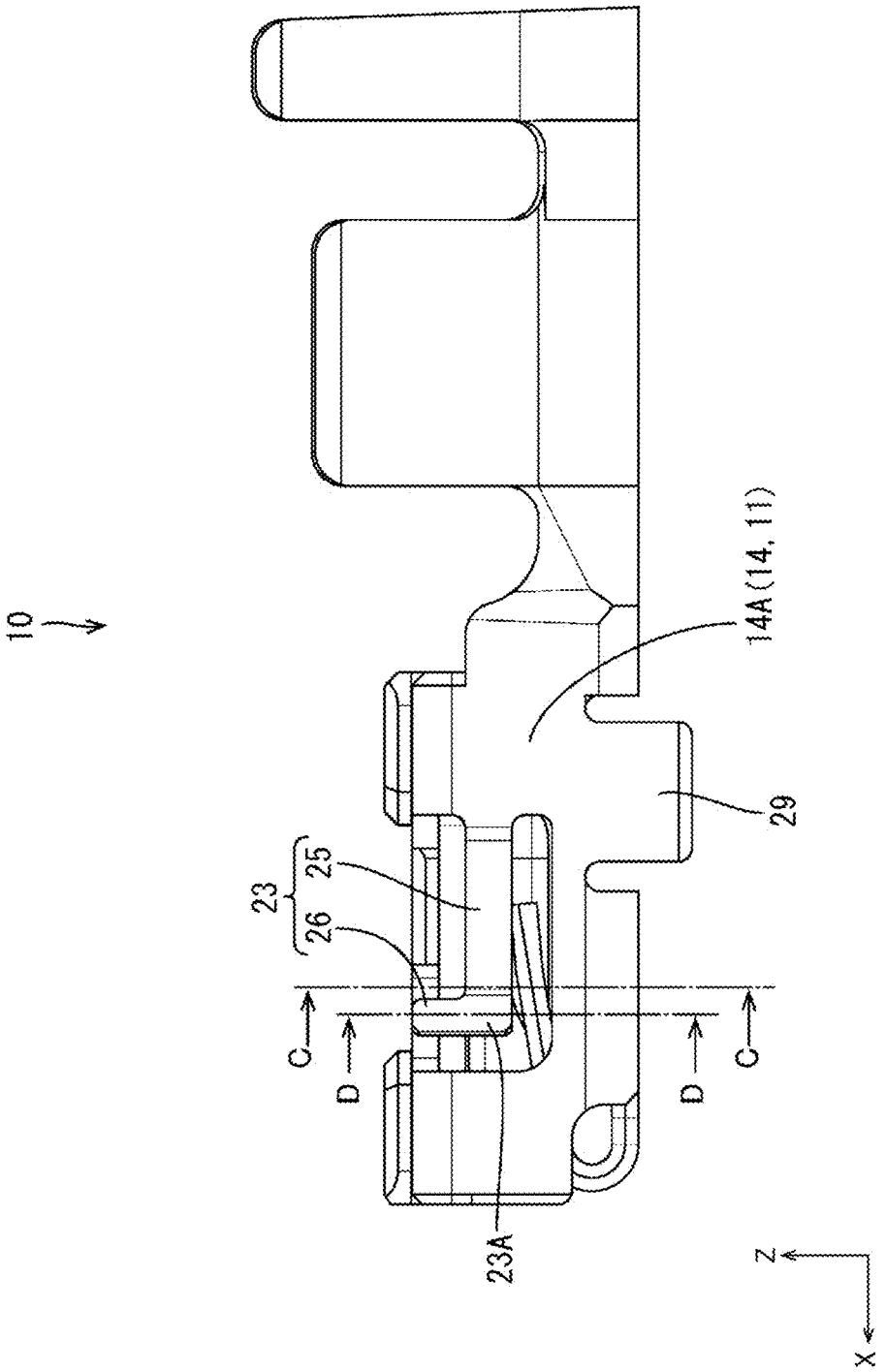

FIG. 4

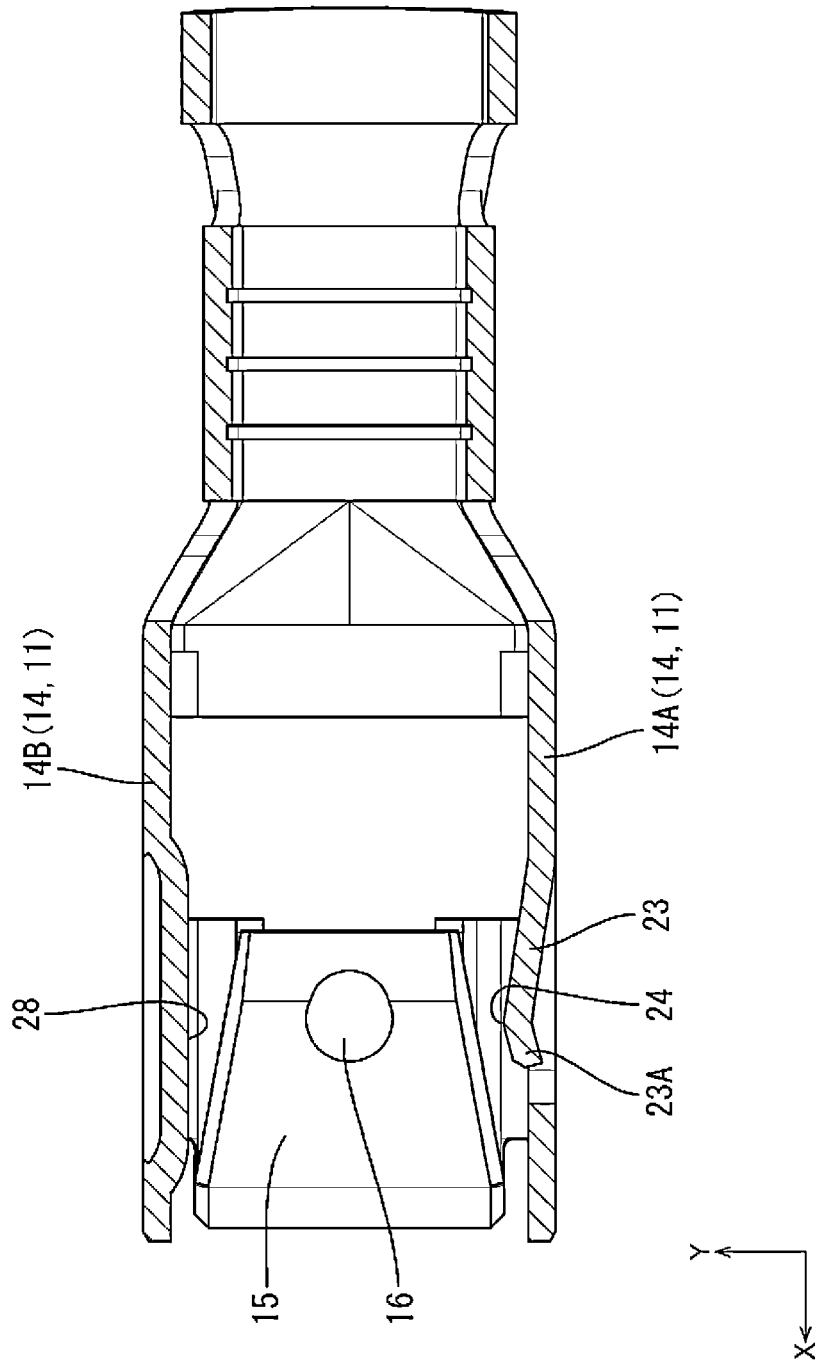

FIG. 5

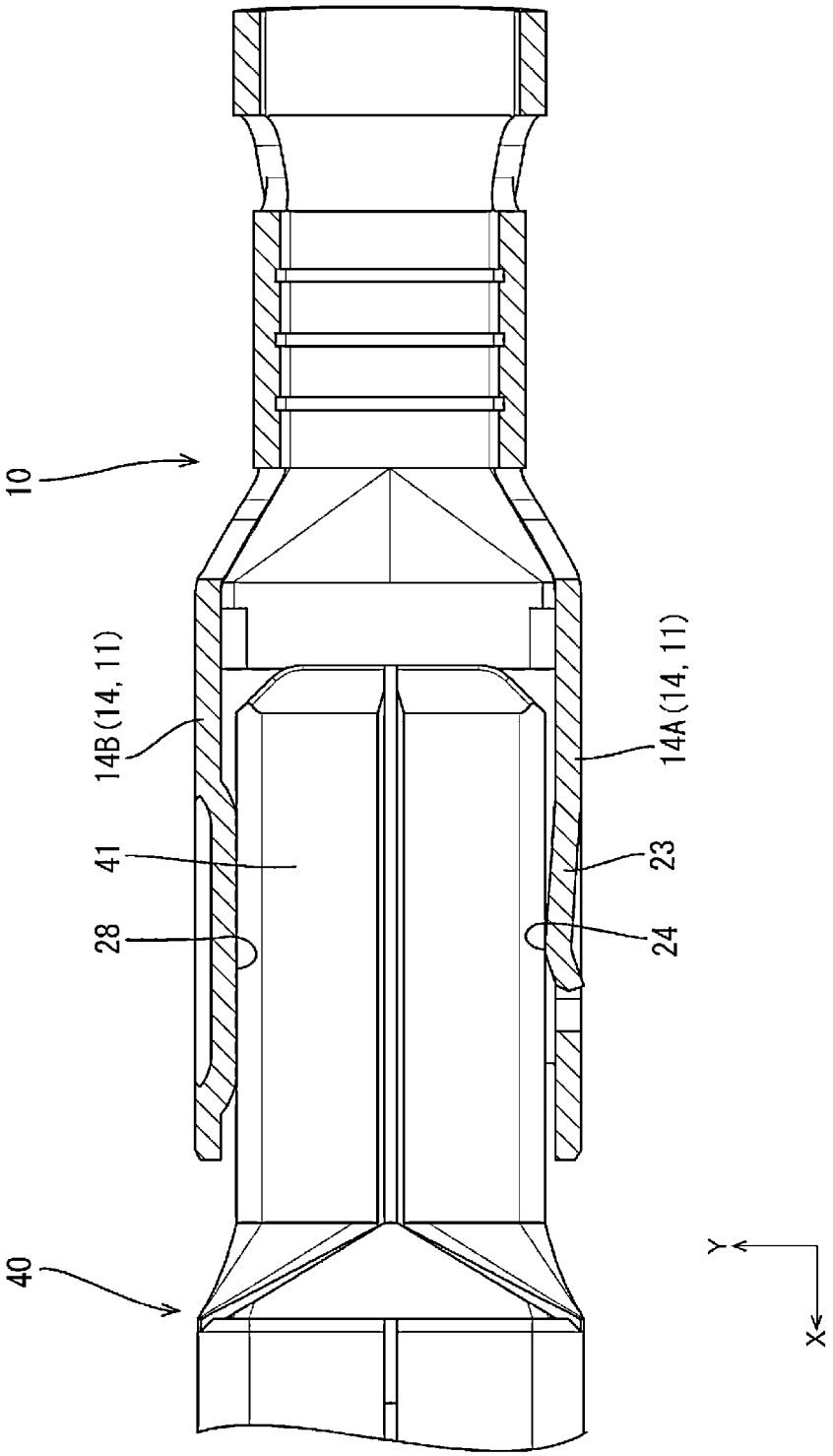

FIG. 6

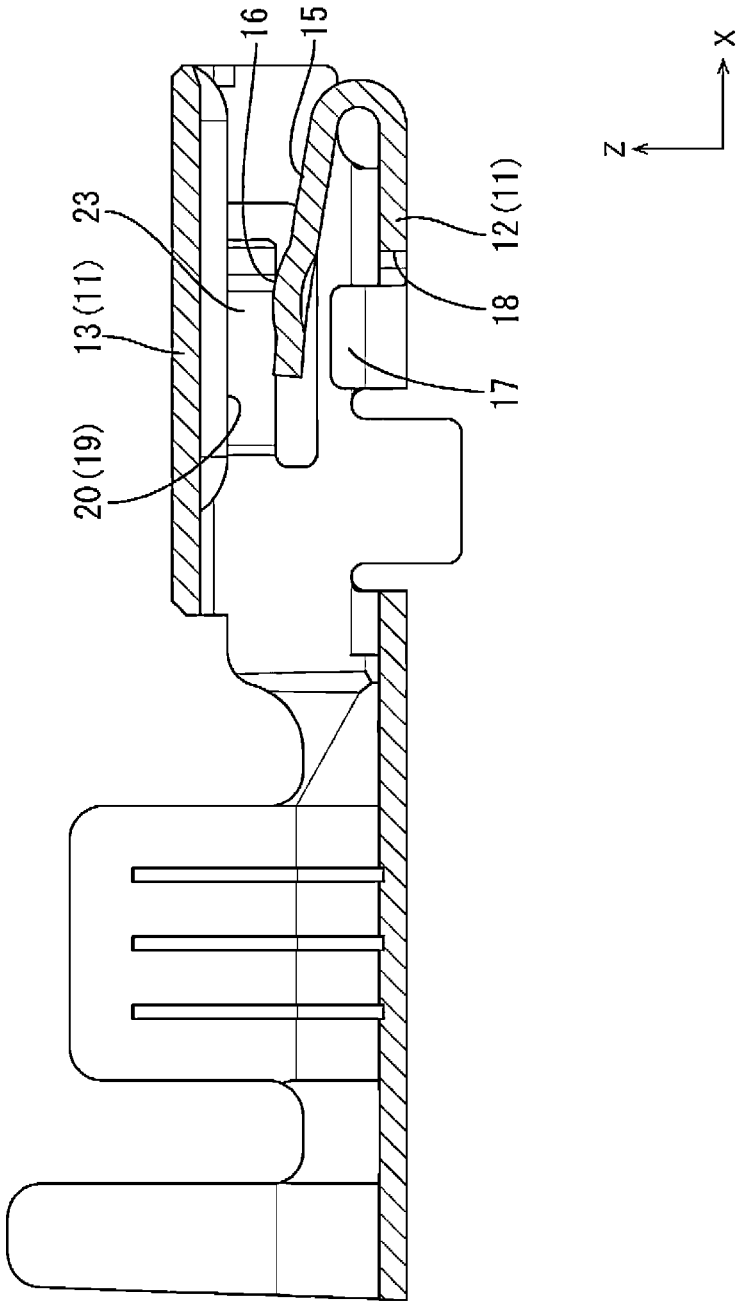

FIG. 7

FIG. 8

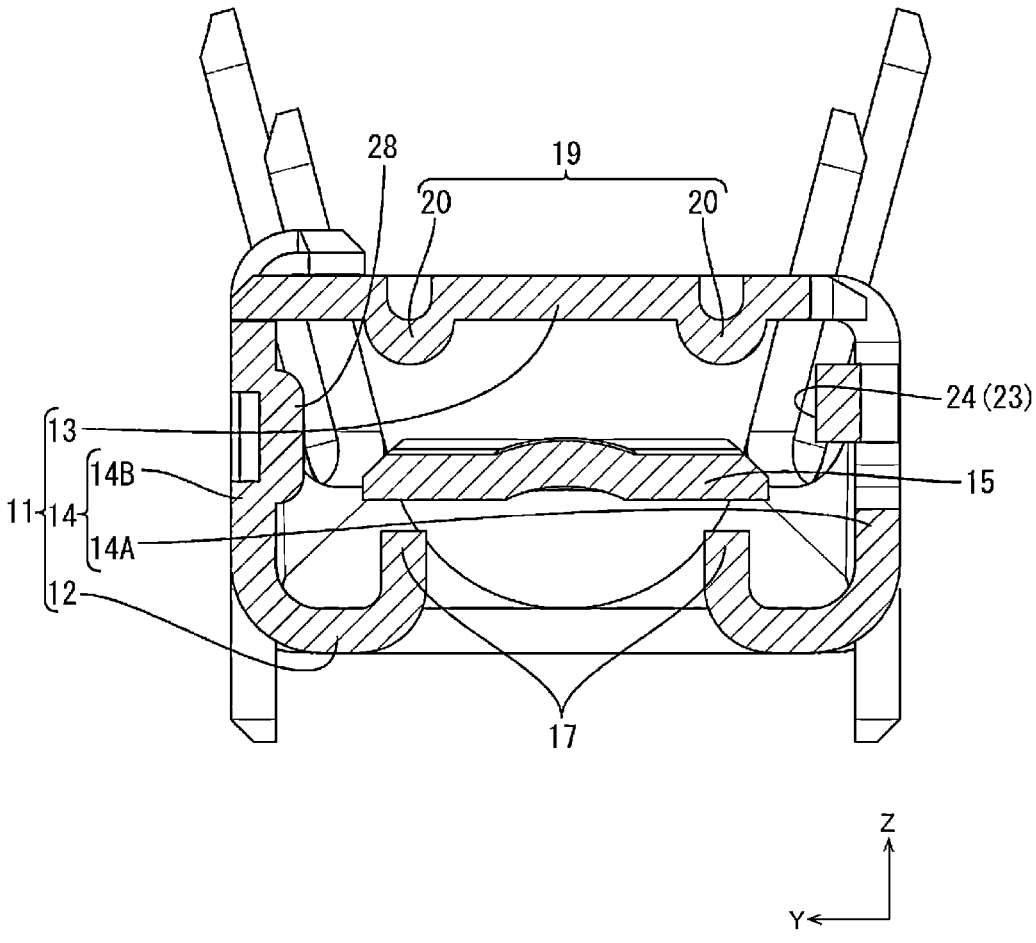

FIG. 9

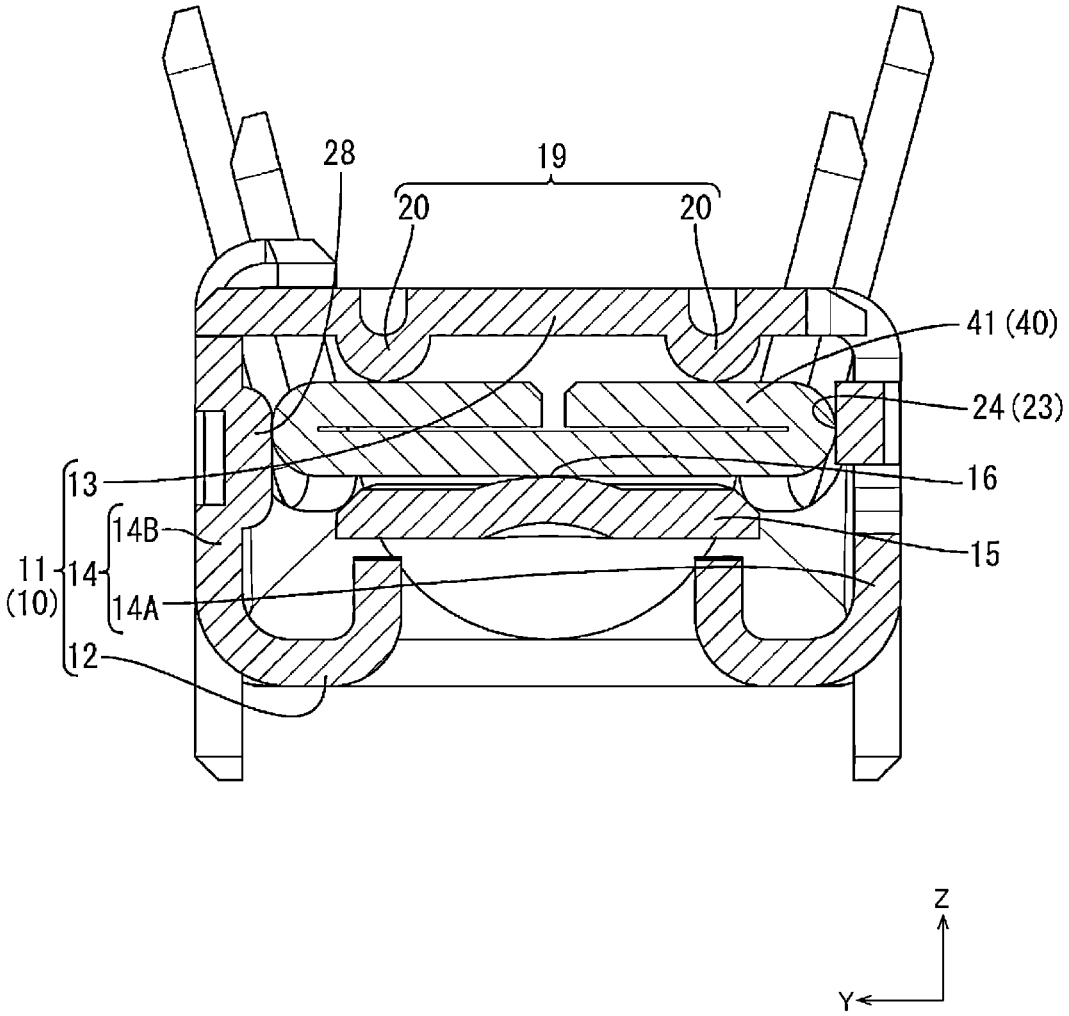

FIG. 10

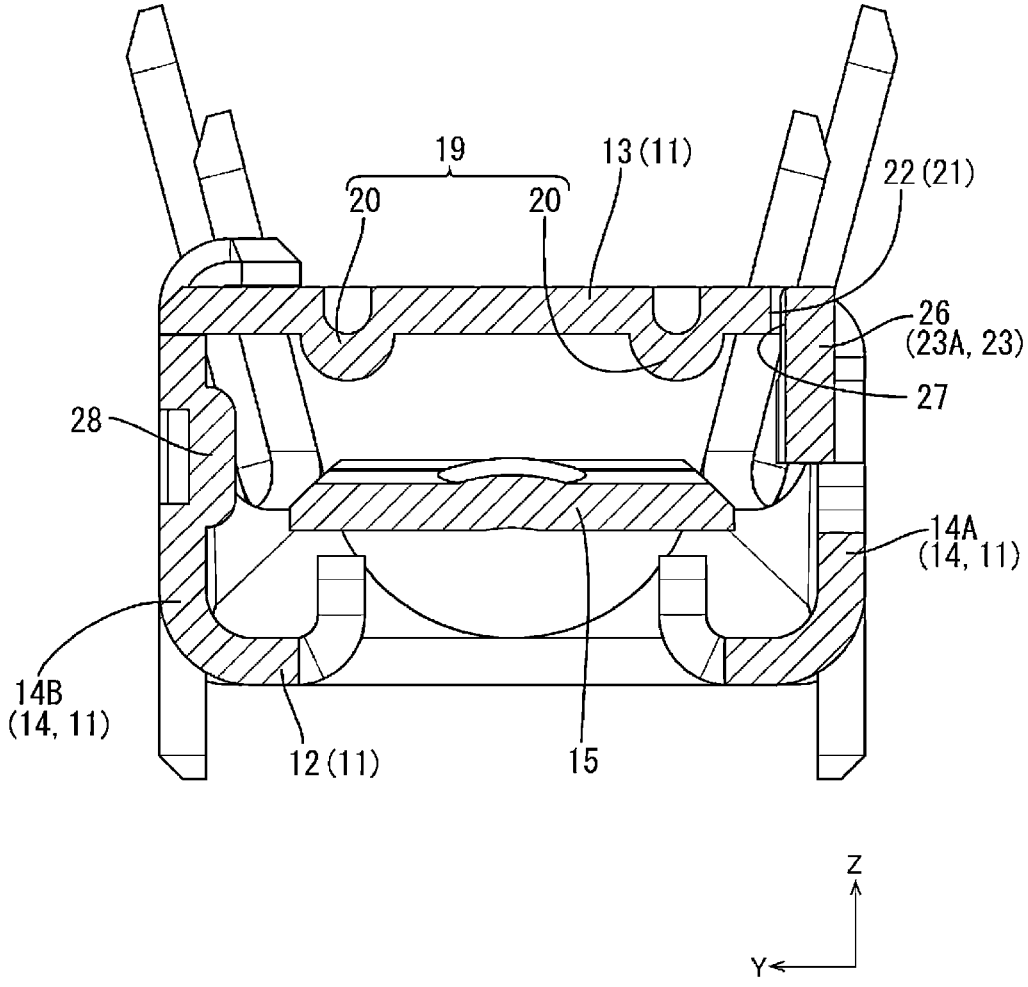

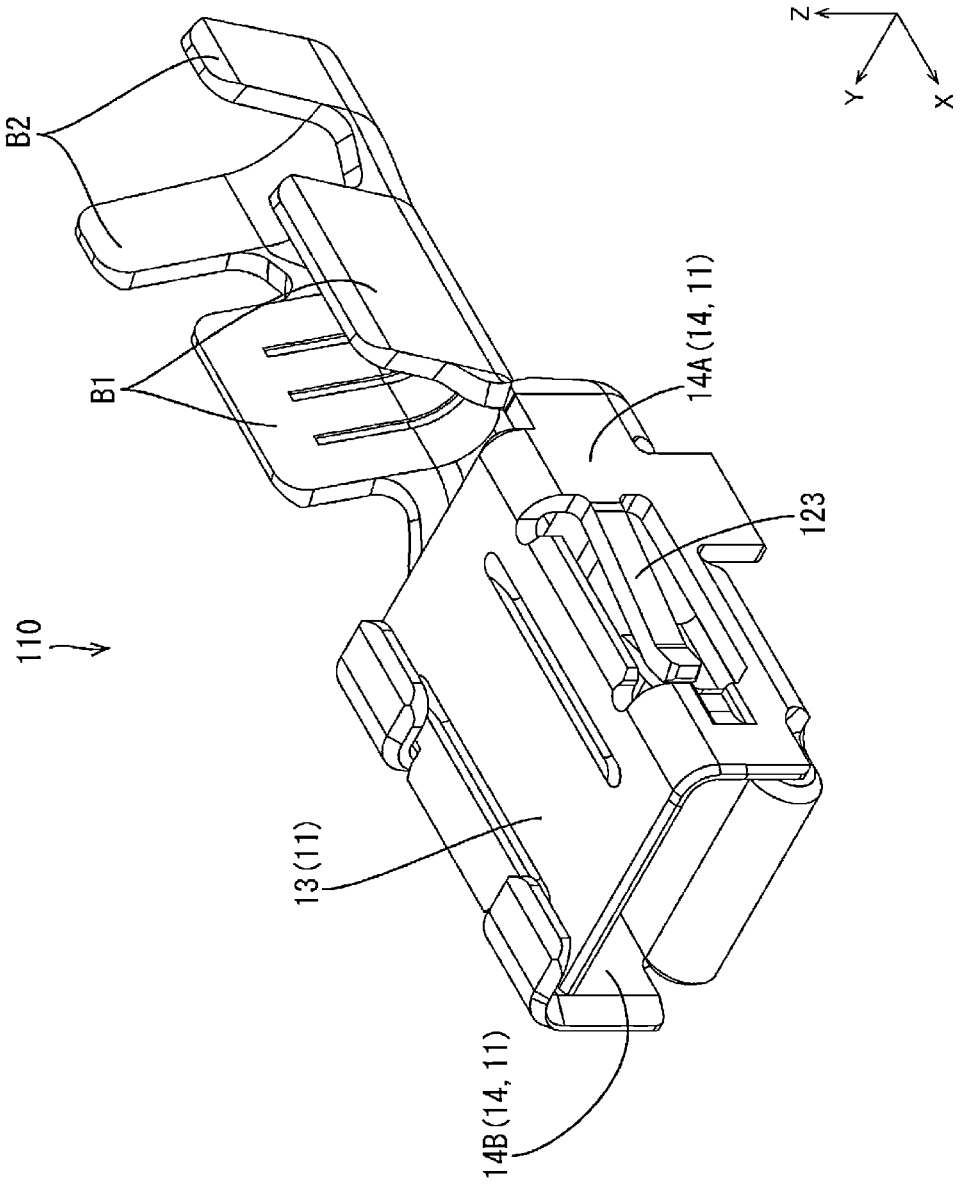

FIG. 11

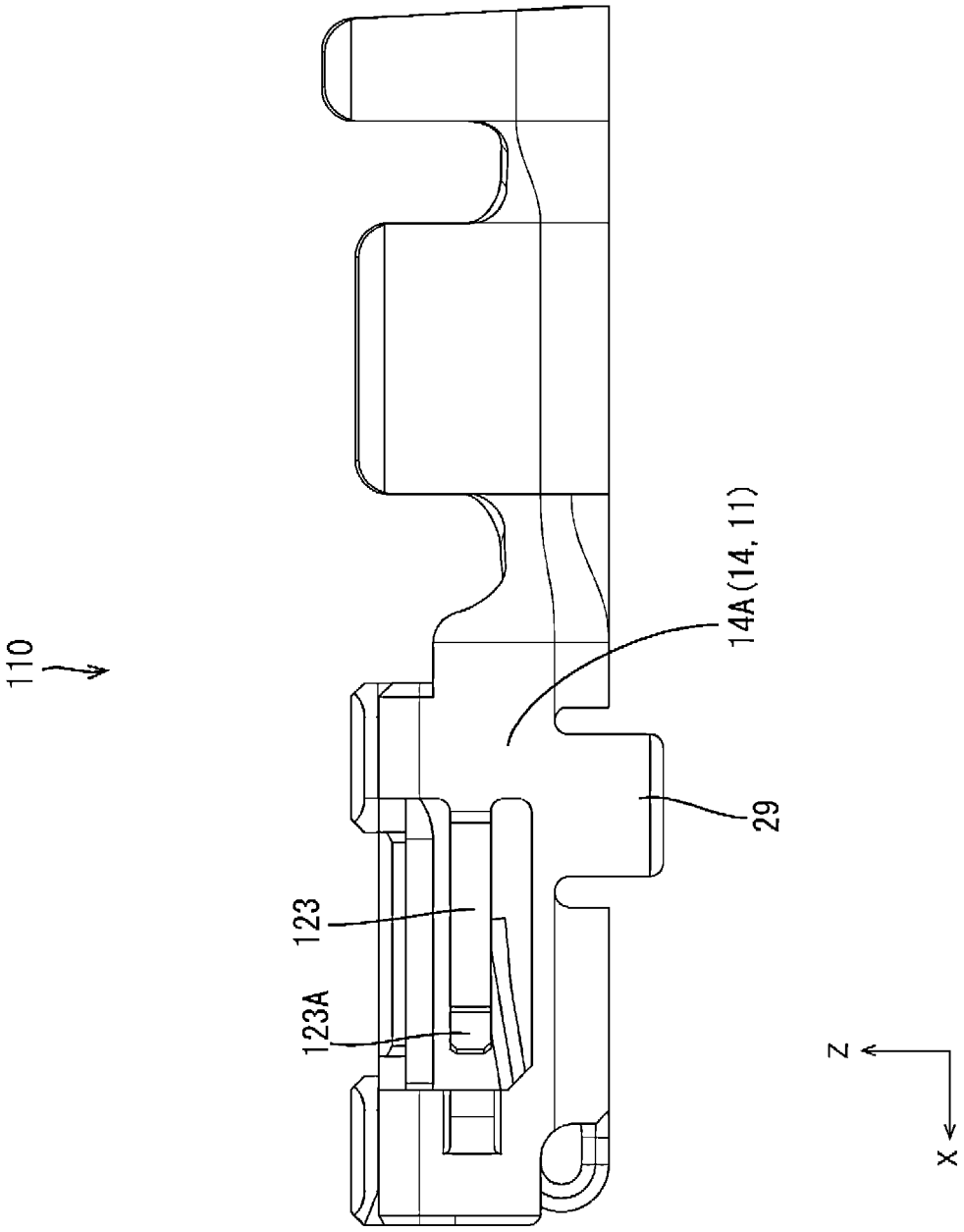

FIG. 12

FIG. 13

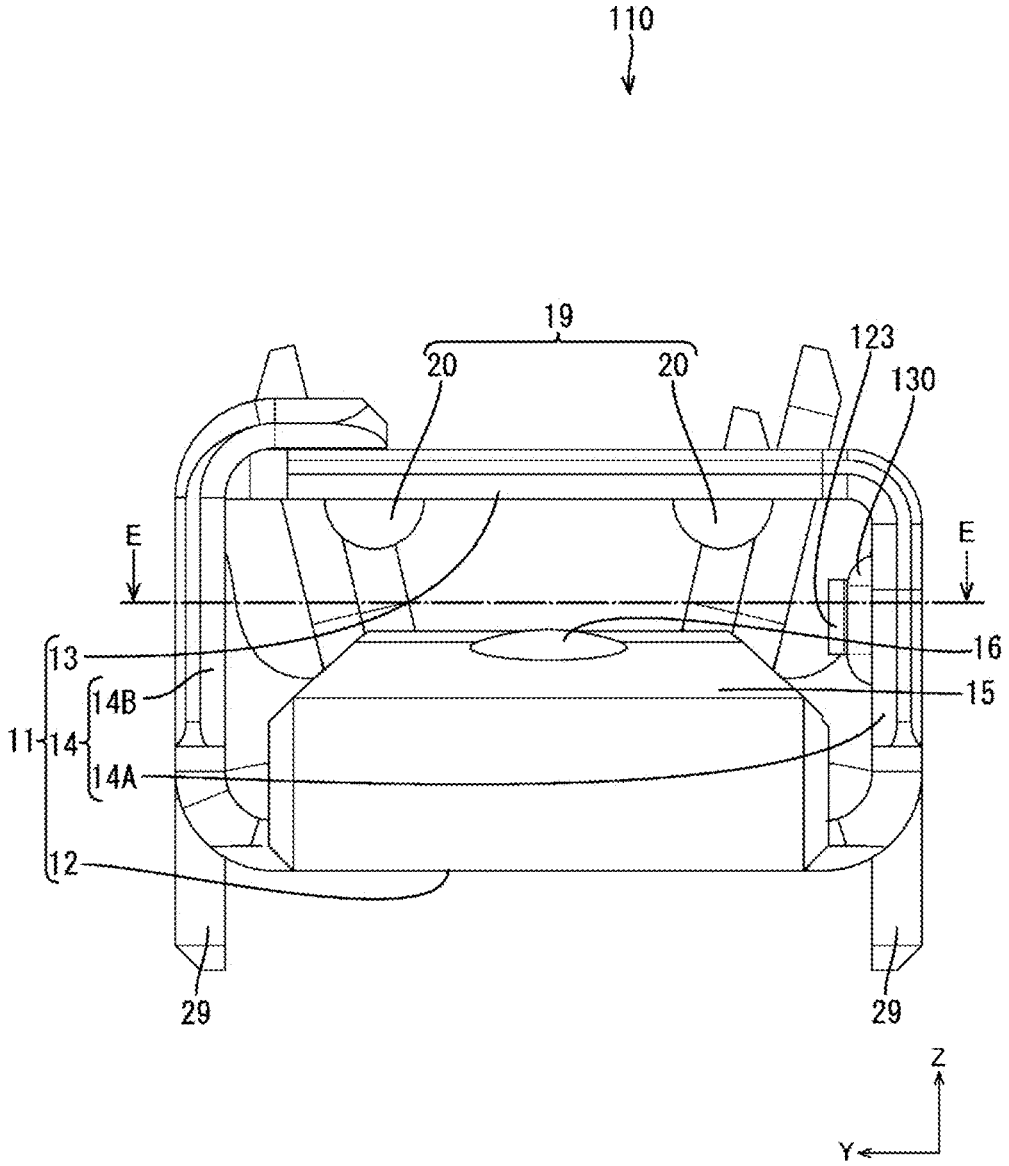

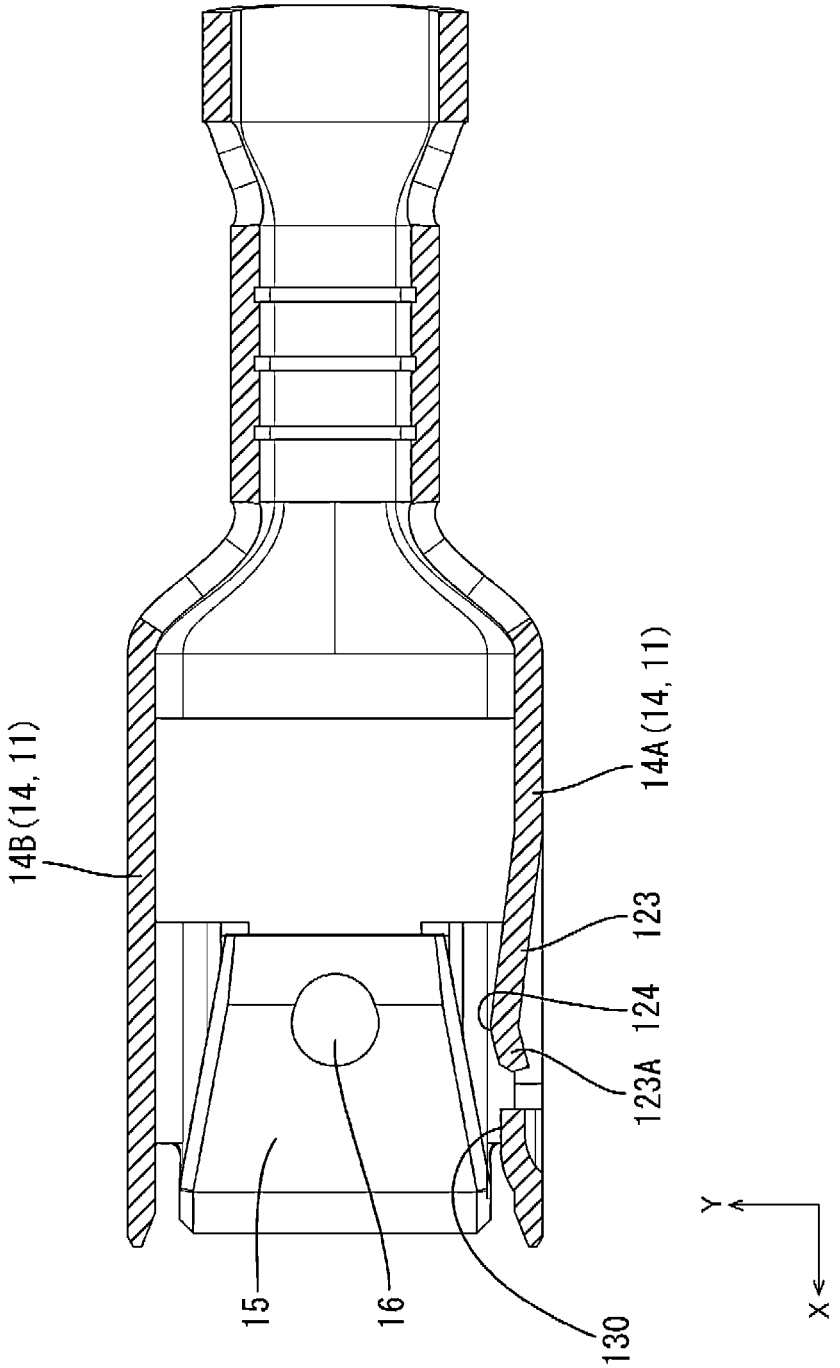

FIG. 14

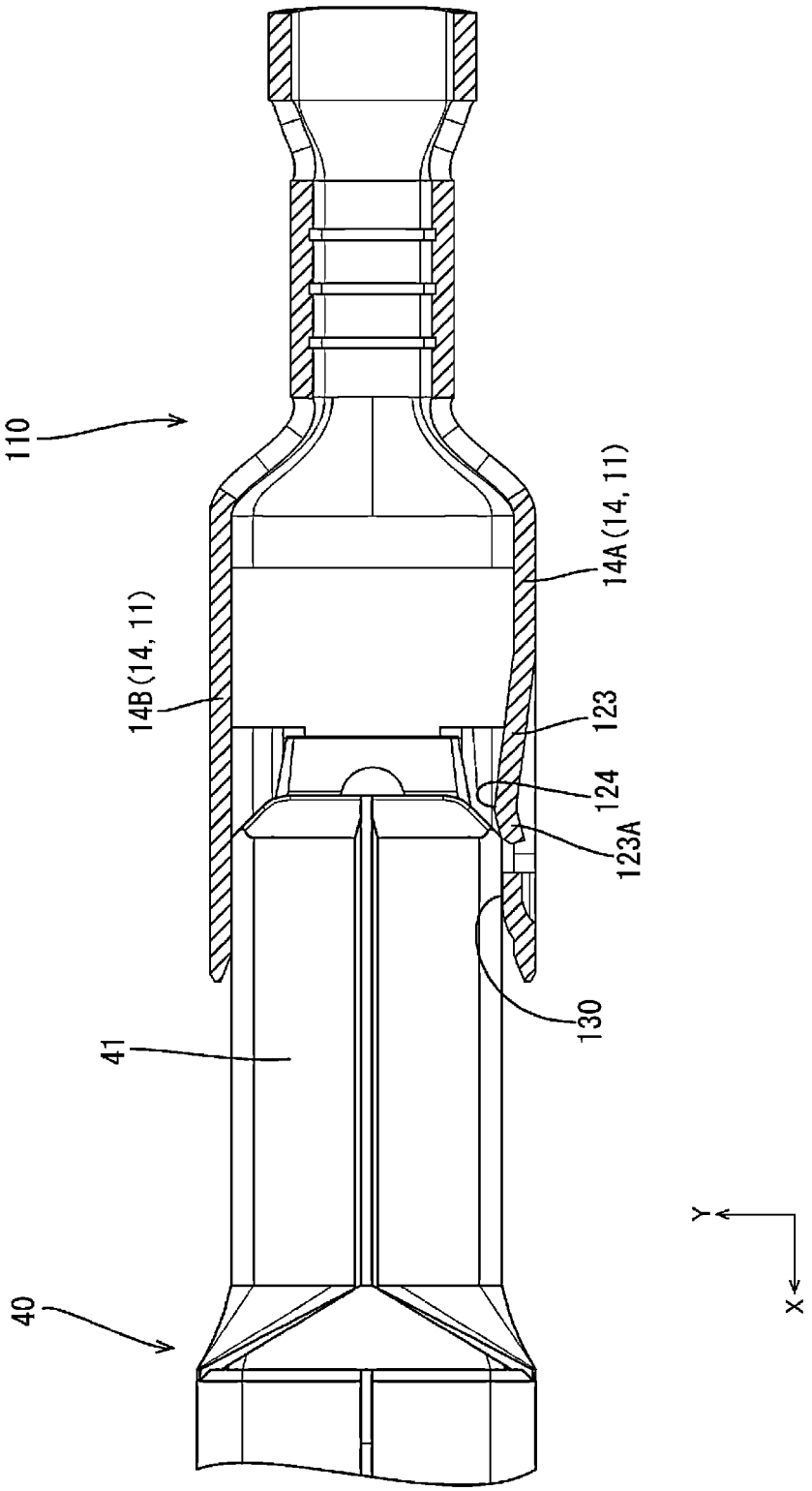

FIG. 15

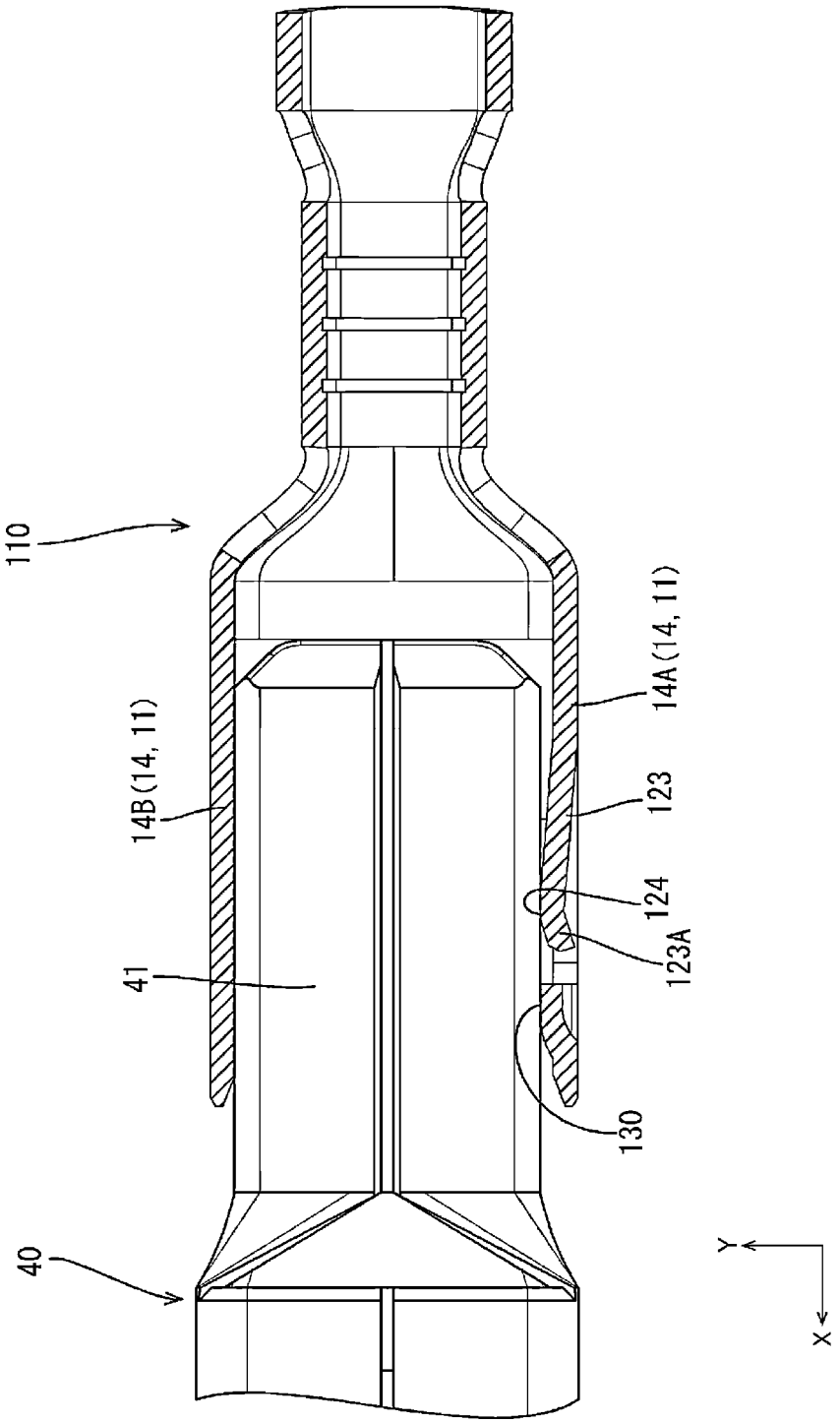

FIG. 16

TERMINAL

TECHNICAL FIELD

[0001] The present disclosure relates to a terminal.

BACKGROUND

[0002] A terminal fitting used in an automotive vehicle or the like is conventionally known from Japanese Patent Laid-Open Publication No. 2009-054504 (Patent Document 1 below). This terminal fitting is provided with a rectangular tube portion, into which a tab of a mating terminal is inserted from front. A bottom wall of the rectangular tube portion is provided with a resilient contact piece, and an upper surface wall of the rectangular tube portion is provided with a receiving portion projecting downward. Resilient pieces cantilevered obliquely rearward are formed in a pair of left and right side walls of the rectangular tube portion. The tab inserted into the rectangular tube portion is sandwiched in a thickness direction between the resilient contact piece and the receiving portion and sandwiched in a width direction between the pair of resilient pieces. Since a movement of the tab in the width direction is suppressed by resilient pressing forces of the pair of resilient pieces, the wear of the tab, the resilient piece and the receiving portion can be suppressed. Therefore, the connection reliability of the terminal fitting and the mating terminal can be ensured even under a vibration environment of the automotive vehicle or the like.

Prior Art Document

Patent Document

[0003] Patent Document 1: JP 2009-054504 A

SUMMARY OF THE INVENTION

Problems to be Solved

[0004] However, in the above configuration, the resilient contact piece may be deformed or the insertion of the mating terminal into the rectangular tube portion may be hindered by the resilient pieces being bent inwardly of the rectangular tube portion by an external force.

Means to Solve the Problem

[0005] The present disclosure is directed to a terminal with a rectangular tube portion, a tab of a mating terminal being inserted into the rectangular tube portion from front, a resilient contact piece provided in the rectangular tube portion, and a receiving portion provided in the rectangular tube portion, the receiving portion sandwiching the tab together with the resilient contact piece, the rectangular tube portion including a first wall provided with the resilient contact piece, a second wall provided with the receiving portion and a pair of side walls connecting both side edges of the first wall and both side edges of the second wall, a facing direction of the pair of side walls being a first direction, at least one of the pair of side walls including a resilient piece for suppressing a movement of the tab in the first direction by pressing a side edge of the tab inwardly of the rectangular tube portion in the first direction, the rectangular tube portion including a stopper portion for suppressing a movement of a tip part of the resilient piece inwardly of the rectangular tube portion in the first direction, the resilient piece including a contact portion disposed to face the stopper portion in the first direction, the stopper portion being disposed between the resilient contact piece and the resilient piece in the first direction, and the tip part of the resilient piece being suppressed from contacting the resilient contact piece by the contact of the contact portion and the stopper portion.

Effect of the Invention

[0006] According to the present disclosure, it is possible to provide a terminal hardly deformed by an external force and capable of ensuring connection reliability with a mating terminal under a vibration environment.

BRIEF DESCRIPTION OF THE DRAWINGS

[0007] FIG. **1** is a perspective view of a terminal according to a first embodiment.
[0008] FIG. **2** is a plan view of the terminal.
[0009] FIG. **3** is a front view of the terminal.
[0010] FIG. **4** is a left side view of the terminal.
[0011] FIG. **5** is a section along A-A of FIG. **3**.
[0012] FIG. **6** is a section along A-A of FIG. **3** showing a state where a tab of a mating terminal is inserted in a rectangular tube portion.
[0013] FIG. **7** is a section along B-B of FIG. **3**.
[0014] FIG. **8** is a section along C-C of FIG. **4**.
[0015] FIG. **9** is a section along C-C of FIG. **4** showing the state where the tab of the mating terminal is inserted in the rectangular tube portion.
[0016] FIG. **10** is a section along D-D of FIG. **4**.
[0017] FIG. **11** is a perspective view of a terminal according to a second embodiment.
[0018] FIG. **12** is a left side view of the terminal.
[0019] FIG. **13** is a front view of the terminal.
[0020] FIG. **14** is a section along E-E of FIG. **13**.
[0021] FIG. **15** is a section along E-E of FIG. **13** showing a state where the insertion of a tab of a mating terminal into a rectangular tube portion is started and the tab is in contact with a tip part of a resilient piece.
[0022] FIG. **16** is a section along E-E of FIG. **13** showing a state where the tab of the mating terminal is inserted in the rectangular tube portion.

DETAILED DESCRIPTION TO EXECUTE THE INVENTION

[Description of Embodiments of Present Disclosure]

[0023] First, embodiments of the present disclosure are listed and described.
[0024] (1) The terminal of the present disclosure is provided with a rectangular tube portion, a tab of a mating terminal being inserted into the rectangular tube portion from front, a resilient contact piece provided in the rectangular tube portion, and a receiving portion provided in the rectangular tube portion, the receiving portion sandwiching the tab together with the resilient contact piece, the rectangular tube portion including a first wall provided with the resilient contact piece, a second wall provided with the receiving portion and a pair of side walls connecting both side edges of the first wall and both side edges of the second wall, a facing direction of the pair of side walls being a first direction, at least one of the pair of side walls including a

resilient piece for suppressing a movement of the tab in the first direction by pressing a side edge of the tab inwardly of the rectangular tube portion in the first direction, the rectangular tube portion including a stopper portion for suppressing a movement of a tip part of the resilient piece inwardly of the rectangular tube portion in the first direction, the resilient piece including a contact portion disposed to face the stopper portion in the first direction, the stopper portion being disposed between the resilient contact piece and the resilient piece in the first direction, and the tip part of the resilient piece being suppressed from contacting the resilient contact piece by the contact of the contact portion and the stopper portion.

[0025] According to this configuration, since a movement of the tab in the first direction is suppressed by the resilient piece, the wear of the tab, the resilient contact piece and the receiving portion can be suppressed even under a vibration environment and the connection reliability of the terminal and the mating terminal can be ensured. A movement of the tip part of the resilient piece inwardly of the rectangular tube portion in the first direction can be suppressed by the contact of the contact portion of the resilient piece and the stopper portion of the rectangular tube portion. Since the stopper portion is disposed between the resilient contact piece and the resilient piece in the first direction, the tip part of the resilient piece can be suppressed from contacting the resilient contact piece. Therefore, the deformation of the resilient contact piece, a connection failure of the terminal and the mating terminal and the like can be suppressed.

[0026] (2) Preferably, either one of the first and second walls includes the stopper portion.

[0027] According to this configuration, since at least one of the pair of side walls includes the resilient piece and either one of the first and second walls includes the stopper portion, the contact portion of the resilient piece and the stopper portion are easily arranged to face each other.

[0028] (3) Preferably, the second wall includes the stopper portion.

[0029] According to this configuration, since the side wall not including the resilient contact piece is provided with the stopper portion, the contact of the resilient piece and the resilient contact piece is easily suppressed.

[0030] (4) Preferably, the resilient piece includes a body portion long in a front-rear direction and an extending portion extending from a tip part of the body portion in a direction orthogonal to both the first direction and the front-rear direction, and the extending portion includes the contact portion.

[0031] According to this configuration, a contact part of the contact portion and the stopper portion is easily made larger. Thus, the contact of the resilient piece with the resilient contact piece can be further suppressed.

[0032] (5) Preferably, the rectangular tube portion includes a recess recessed in the first direction, the recess includes the stopper portion, and the extending portion is disposed inside the recess.

[0033] According to this configuration, since the extending portion is disposed inside the recess, the tip part of the resilient piece can be arranged further inwardly of the rectangular tube portion in the first direction than the side wall provided with the resilient piece.

[0034] (6) Preferably, only one of the pair of side walls includes the resilient piece, and the other of the pair of side walls includes a pushing portion for sandwiching the tab in the first direction together with the resilient piece.

[0035] According to this configuration, since a movement of the tab in the first direction is suppressed by the resilient piece and the pushing portion, the connection reliability of the terminal and the mating terminal can be ensured even under a vibration environment. Since the resilient piece is provided in only one of the pair of side walls, the tip part of the resilient piece is less likely to move inwardly of the rectangular tube portion as compared to the case where resilient pieces are provided in both of the pair of side walls.

[0036] (7) The terminal of the present disclosure is provided with a rectangular tube portion, a tab of a mating terminal being inserted into the rectangular tube portion from front, a resilient contact piece provided in the rectangular tube portion, and a receiving portion provided in the rectangular tube portion, the receiving portion sandwiching the tab together with the resilient contact piece, the rectangular tube portion including a first wall provided with the resilient contact piece, a second wall provided with the receiving portion and a pair of side walls connecting both side edges of the first wall and both side edges of the second wall, a facing direction of the pair of side walls being a first direction, and one of the pair of side walls including a resilient piece for suppressing a movement of the tab in the first direction by pressing a side edge of the tab inwardly of the rectangular tube portion in the first direction and a projecting portion disposed in front of the resilient piece and projecting inwardly of the rectangular tube portion.

[0037] According to this configuration, since a movement of the tab in the first direction is suppressed by the resilient piece, the wear of the tab, the resilient contact piece and the receiving portion can be suppressed even under a vibration environment and the connection reliability of the terminal and the mating terminal can be ensured. Since the projecting portion is provided in front of the resilient piece, the tab comes into contact with the projecting portion earlier than the resilient piece when being inserted into the rectangular tube portion. Therefore, the deformation of the resilient piece due to contact with the tab can be suppressed.

[0038] (8) Preferably, the resilient piece extends in a front-rear direction, a rear end part of the resilient piece is connected to one of the pair of side walls, and a pressing portion for pressing the tab is disposed at a position near a front end part of the resilient piece.

[0039] According to this configuration, since the pressing portion of the resilient piece is disposed near the projecting portion, the deformation of the resilient piece is more easily suppressed.

[0040] (9) Preferably, the tab inserted into the rectangular tube portion is sandwiched between the projecting portion and the other of the pair of side walls.

[0041] According to this configuration, since the tab is sandwiched between the projecting portion and the other of the pair of side walls, the wear of the tab, the resilient contact piece and the like can be further suppressed under a vibration environment.

[Details of Embodiments of Present Disclosure]

[0042] Hereinafter, embodiments of the present disclosure are described. The present disclosure is not limited to these illustrations, but is represented by claims and intended to include all changes in the scope of claims and in the meaning and scope of equivalents.

<First Embodiment>

[0043] A first embodiment of the present disclosure is described with reference to FIGS. **1** to **10**. A terminal **10** of this embodiment is, for example, mounted in a vehicle such as an automotive vehicle and used under a vibration environment where vibration is generated. In the following description, a direction indicated by an arrow Z is referred to as an upward direction, a direction indicated by an arrow X is referred to as a forward direction and a direction indicated by an arrow Y is referred to as a rightward direction.

[Terminal]

[0044] The terminal **10** is formed by press-working and bending an electrically conductive metal plate material. As shown in FIG. **1**, the terminal **10** is provided with a rectangular tube portion **11** open in a front-rear direction in a substantially front half of the terminal **10** and a wire barrel B**1** and an insulation barrel B**2** disposed behind the rectangular tube portion **11**. As shown in FIG. **6**, a tab **41** of a mating terminal **40** is inserted into the rectangular tube portion **11** from front. The wire barrel B**1** is crimped to a core wire of an unillustrated coated wire, and the insulation barrel B**2** is crimped to an insulation coating the unillustrated coated wire.

[Rectangular Tube Portion, First Wall, Second Wall, Pair of Side Walls]

[0045] As shown in FIGS. **3** and **8**, the rectangular tube portion **11** includes a first wall **12** disposed on a lower side of the rectangular tube portion **11**, a second wall **13** facing the first wall **12** and a pair of side walls **14** connecting both side edges of the first wall **12** and those of the second wall **13**. A facing direction of the pair of side walls **14** is a lateral direction (an example of a first direction). One of the pair of side walls **14** serves as a third wall **14**A disposed on a left side of the rectangular tube portion **11**. The other side wall **14** serves as a fourth wall **14**B disposed on a right side of the rectangular tube portion **11**.

[Resilient Contact Piece, Contact Point Portion]

[0046] As shown in FIG. **7**, a resilient contact piece **15** folded rearward is provided on the front end of the first wall **12**. The resilient contact piece **15** is cantilevered obliquely rearward to an upper side in the rectangular tube portion **11** and deflected and deformed downward. A contact point portion **16** projecting upward is provided on the upper surface of the resilient contact piece **15**. The contact point portion **16** is formed by striking and has a spherical shape as a whole. As shown in FIG. **9**, with the tab **41** of the mating terminal **40** inserted in the rectangular tube portion **11**, the lower surface (surface facing the first wall **12**) of the mating terminal **41** is in contact with an apex of the contact point portion **16**.

[0047] As shown in FIG. **8**, excessive deflection preventing portions **17** for suppressing downward deformation of the resilient contact piece **15** are provided below the resilient contact piece **15** of the first wall **12**. A pair of the excessive deflection preventing portions **17** are formed below right and left end parts of the resilient contact piece **15** by cutting and raising. As shown in FIG. **7**, the first wall **12** includes a locking portion **18** for locking the terminal **10** to an unillustrated housing.

[Receiving Portion]

[0048] As shown in FIGS. **3** and **8**, the second wall **13** is provided with a receiving portion **19** projecting downward from the lower surface of the second wall **13**. The receiving portion **19** is formed by being struck downward. The receiving portion **19** is composed of a pair of ridge portions **20** arranged in the lateral direction. As shown in FIG. **7**, the ridge portion **20** is formed to extend in the front-rear direction. An interval in the vertical direction between the lower end of the ridge portion **20** and the apex of the contact point portion **16** is set to be smaller than a vertical dimension of the tab **41**. As shown in FIG. **9**, with the tab **41** inserted in the rectangular tube portion **11**, the tab **41** is sandwiched in the vertical direction between the contact point portion **16** of the resilient contact piece **15** and the receiving portion **19**. In this way, the terminal **10** and the mating terminal **40** are electrically connected.

[Recess, Stopper Portion]

[0049] As shown in FIG. **2**, the second wall **13** includes a recess **21** recessed rightward in a left end part. The recess **21** is disposed forward of a center position in the front-rear direction of the second wall **13**. The recess **21** has a front surface **21**A disposed on a front side, a rear surface **21**B disposed on a rear side and a stopper portion **22** connecting a right end part of the front surface **21**A and a right end part of the rear surface **21**B. The stopper portion **22** is a surface substantially parallel to the third wall **14**A. The stopper portion **22** is disposed between the resilient contact piece **15** and a resilient piece **23** to be described later in the lateral direction (see FIG. **10**).

[Resilient Piece]

[0050] As shown in FIG. **1**, the third wall **14**A is provided with the resilient piece **23** by cutting and raising. The resilient piece **23** is cantilevered forward from a rear part of the third wall **14**A. The resilient piece **23** is resiliently deformable in the lateral direction with a base end of a rear end part substantially as a fulcrum. As shown in FIG. **5**, the resilient piece **23** is provided more inwardly, i.e. rightwardly, of the rectangular tube portion **11** toward a front side as a whole. A tip part **23**A, which is a front end part, of the resilient piece **23** is bent outwardly, i.e. leftwardly of the rectangular tube portion **11**. A rightmost part of the resilient piece **23** serves as a pressing portion **24**. The pressing portion **24** is disposed at a position near the contact point portion **16** of the resilient contact piece **15** in the front-rear direction. As shown in FIG. **6**, the pressing portion **24** presses a side edge of the tab **41** inserted into the rectangular tube portion **11**.

[Body Portion, Extending Portion]

[0051] As shown in FIG. **4**, the resilient piece **23** is substantially L-shaped in a side view and includes a body portion **25** long in the front-rear direction and an extending portion **26** extending upward (an example of a direction orthogonal to both the first direction and the front-rear

direction) from a tip part of the body portion **25**. The extending portion **26** is an upper part of the tip part **23**A of the resilient piece **23**.

[0052] As shown in FIGS. **1** and **2**, the extending portion **26** is disposed inside the recess **21** of the second wall **13**. In this way, the tip part **23**A of the resilient piece **23** can be arranged further inwardly (rightwardly) of the rectangular tube portion **11** than the third wall **14**A provided with the resilient piece **23**. Therefore, the pressing portion **24** of the resilient piece **23** is easily provided at a position to contact the left side edge of the tab **41**. Further, since the resilient piece **23** is arranged not to project outwardly (leftwardly) of the rectangular tube portion **11**, the resilient piece **23** hardly receives an external force.

[Contact Portion]

[0053] As shown in FIG. **10**, the extending portion **26** includes a contact portion **27** disposed to face the stopper portion **22** in the lateral direction. If the tip part **23**A of the resilient piece **23** is moved rightward by an external force, the contact portion **27** and the stopper portion **22** come into contact.

[Pushing Portion]

[0054] As shown in FIGS. **3**, **5** and **8**, the fourth wall **14**B is provided with a pushing portion **28** projecting leftward from the left surface of the fourth wall **14**B. The pushing portion **28** is formed by being struck leftward. The pushing portion **28** has a rectangular shape long in the front-rear direction and short in the vertical direction. As shown in FIG. **8**, the pushing portion **28** and the pressing portion **24** of the resilient piece **23** are disposed from the lower surface of the receiving portion **19** to a position somewhat below the upper surface of the resilient contact piece **15** in the vertical direction. An interval in the lateral direction between the pushing portion **28** and the pressing portion **24** is set to be slightly smaller than a lateral dimension of the tab **41**.

[0055] As shown in FIGS. **6** and **9**, with the tab **41** inserted in the rectangular tube portion **11**, the tab **41** is sandwiched in the lateral direction between the pushing portion **28** and the pressing portion **24**. In this way, a movement of the tab **41** in the lateral direction can be suppressed even under a vibration environment such as an automotive vehicle. Thus, the wear of the tab **41**, the resilient contact piece **15** and the receiving portion **19** due to a movement of the tab **41** in the lateral direction can be suppressed and the connection reliability of the terminal **10** and the mating terminal **40** can be ensured.

[0056] As shown in FIGS. **3** and **4**, projecting pieces **29** projecting downwardly of the rectangular tube portion **11** are respectively provided on rear parts of the pair of side walls **14**. The projecting pieces **29** enter grooves provided in the unillustrated housing in accommodating the terminal **10** into the housing, thereby preventing the terminal **10** from being inserted upside down into the housing and guiding the insertion of the terminal **10** into the housing.

[Suppression of Movement of Tip Part of Resilient Piece by Stopper Portion and Contact Portion]

[0057] The terminal **10** according to this embodiment is configured as described above. A movement of the tip part **23**A of the resilient piece **23** of the terminal **10** in the lateral direction is described below.

[0058] The resilient piece **23** of the terminal **10** is provided by cutting and raising the third wall **14**A, and exposed to outside. Thus, the tip part **23**A of the resilient piece **23** may move inwardly of the rectangular tube portion **11** by receiving an external force.

[0059] In this embodiment, the contact portion **27** is provided on the tip part **23**A of the resilient piece **23** and the second wall **13** is provided with the stopper portion **22** facing the contact portion **27** in the lateral direction. In this way, even if the tip part **23**A of the resilient piece **23** moves inwardly of the rectangular tube portion **11** (rightward) by receiving an external force, a movement of the tip part **23**A of the resilient piece **23** inwardly (rightwardly) of the rectangular tube portion **11** beyond the stopper portion **22** is suppressed. Further, since the stopper portion **22** is disposed between the resilient contact piece **15** and the resilient piece **23** in the lateral direction, the contact of the tip part **23**A of the resilient piece **23** and the resilient contact piece **15** is suppressed. Therefore, it can be suppressed that the resilient piece **23** is bent inwardly (rightwardly) of the rectangular tube portion **11** to deform the resilient contact piece **15** and hinder the insertion of the tab **41** of the mating terminal **40** into the rectangular tube portion **11**.

[Functions and Effects of First Embodiment]

[0060] According to this embodiment, the following functions and effects are achieved.

[0061] The terminal **10** according to this embodiment is provided with the rectangular tube portion **11**, into which the tab **41** of the mating terminal **40** is inserted from front, the resilient contact piece **15** provided in the rectangular tube portion **11** and the receiving portion **19** provided in the rectangular tube portion **11** and configured to sandwich the tab **41** together with the resilient contact piece **15**. The rectangular tube portion **11** includes the first wall **12** provided with the resilient contact piece **15**, the second wall **13** provided with the receiving portion **19** and the pair of side walls **14** connecting the both side edges of the first wall **12** and those of the second wall **13**. The facing direction of the pair of side walls **14** is the first direction. At least one of the pair of side walls **14** includes the resilient piece **23** for suppressing a movement of the tab **41** in the first direction by pressing the side edge of the tab **41** inwardly of the rectangular tube portion **11** in the first direction. The rectangular tube portion **11** includes the stopper portion **22** for suppressing a movement of the tip part **23**A of the resilient piece **23** inwardly of the rectangular tube portion **11** in the first direction. The resilient piece **23** includes the contact portion **27** disposed to face the stopper portion **22** in the first direction. The stopper portion **22** is disposed between the resilient contact piece **15** and the resilient piece **23** in the first direction, and the contact of the tip part **23**A of the resilient piece **23** with the resilient piece **15** is suppressed by the contact of the contact portion **27** and the stopper portion **22**.

[0062] According to this configuration, since a movement of the tab **41** in the first direction is suppressed by the resilient piece **23**, the wear of the tab **41**, the resilient contact piece **15** and the receiving portion **19** can be suppressed even under a vibration environment and the connection reliability of the terminal **10** and the mating terminal **40** can be ensured. A movement of the tip part **23**A of the resilient piece **23** inwardly of the rectangular tube portion **11** in the first direction can be suppressed by the contact of the contact portion **27** of the resilient piece **23** and the stopper portion

22 of the rectangular tube portion 11. Since the stopper portion 22 is disposed between the resilient contact piece 15 and the resilient piece 23 in the first direction, the contact of the tip part 23A of the resilient piece 23 with the resilient contact piece 15 can be suppressed. Therefore, the deformation of the resilient contact piece 15, a connection failure of the terminal 10 and the mating terminal 40 and the like can be suppressed.

[0063] In this embodiment, the second wall 13 includes the stopper portion 22.

[0064] According to this configuration, since at least one of the pair of side walls 14 includes the resilient piece 23 and the second wall 13 includes the stopper portion 22, the contact portion 27 of the resilient piece 23 and the stopper portion 22 are easily arranged to face each other. Further, since the second wall 13 not including the resilient contact piece 15 is provided with the stopper portion 22, the contact of the resilient piece 23 and the resilient contact piece 15 is easily suppressed.

[0065] In this embodiment, the resilient piece 23 includes the body portion 25 long in the front-rear direction and the extending portion 26 extending from the tip part of the body portion 25 in the direction orthogonal to both the first direction and the front-rear direction, and the extending portion 26 includes the contact portion 27.

[0066] According to this configuration, a contact part of the contact portion 27 and the stopper portion 22 is easily made larger. Thus, the contact of the resilient piece 23 with the resilient contact piece 15 can be further suppressed.

[0067] In this embodiment, the rectangular tube portion 11 includes the recess 21 recessed in the first direction, the recess 21 includes the stopper portion 22 and the extending portion 26 is disposed inside the recess 21.

[0068] According to this configuration, since the extending portion 26 is disposed inside the recess 21, the tip part 23A of the resilient piece 23 can be arranged further inwardly of the rectangular tube portion 11 in the first direction than the side wall 14 (third wall 14A) provided with the resilient piece 23.

[0069] In this embodiment, only one (third wall 14A) of the pair of side walls 14 includes the resilient piece 23, and the other (fourth wall 14B) of the pair of side walls 14 includes the pushing portion 28 for sandwiching the tab 41 in the first direction together with the resilient piece 23.

[0070] According to this configuration, since a movement of the tab 41 in the first direction is suppressed by the resilient piece 23 and the pushing portion 28, the connection reliability of the terminal 10 and the mating terminal 40 can be ensured even under a vibration environment. Since the resilient piece 23 is provided in only one (third wall 14A) of the pair of side walls 14, the tip part 23A of the resilient piece 23 is less likely to move inwardly of the rectangular tube portion 11 as compared to the case where resilient pieces are provided in both of a pair of side walls.

<Second Embodiment>

[0071] A second embodiment of the present disclosure is described with reference to FIGS. 11 to 16. A terminal 110 of this embodiment is used under a vibration environment where vibration is generated as in the first embodiment. In the following description, a direction indicated by an arrow Z is referred to as an upward direction, a direction indicated by an arrow X is referred to as a forward direction and a direction indicated by an arrow Y is referred to as a rightward direction. Further, for the configuration of the second embodiment, members similar to those of the first embodiment are denoted by the same reference signs and detailed description on those members may be omitted.

[Terminal]

[0072] The terminal 110 is formed by press-working and bending an electrically conductive metal plate material. As shown in FIG. 11, the terminal 110 is provided with a rectangular tube portion 11 open in a front-rear direction and a wire barrel B1 and an insulation barrel B2 disposed behind the rectangular tube portion 11. As shown in FIGS. 15 and 16, a tab 41 of a mating terminal 40 is inserted into the rectangular tube portion 11 from front.

[Rectangular Tube Portion, First Wall, Second Wall, Pair of Side Walls]

[0073] As shown in FIG. 13, the rectangular tube portion 11 includes a first wall 12, a second wall 13 facing the first wall 12 and a pair of side walls 14. The pair of side walls 14 are facing each other in a lateral direction (an example of the first direction). One of the pair of side walls 14 serves as a third wall 14A disposed on a left side of the rectangular tube portion 11. The other side wall 14 serves as a fourth wall 14B disposed on a right side of the rectangular tube portion 11.

[Resilient Contact Piece, Receiving Portion]

[0074] A resilient contact piece 15 is provided inside the rectangular tube portion 11. A contact point portion 16 is provided on the upper surface of the resilient contact piece 15. The second wall 13 is provided with a receiving portion 19 projecting downward from the lower surface of the second wall 13. The receiving portion 19 is composed of a pair of ridge portions 20 extending in the front-rear direction and arranged in the lateral direction. The tab 41 is sandwiched in a vertical direction between the contact point portion 16 of the resilient contact piece 15 and the receiving portion 19. In this way, the terminal 10 and the mating terminal 40 are electrically connected.

[Resilient Piece]

[0075] As shown in FIGS. 11 and 12, the third wall 14A is provided with a resilient piece 123 by cutting and raising. The resilient piece 123 is formed to be long in the front-rear direction and connected to the third wall 14A at a rear end part. The resilient piece 123 is resiliently deformable in the lateral direction with a base end of the rear end part substantially as a fulcrum. As shown in FIG. 14, the resilient piece 123 is provided more inwardly, i.e. rightwardly, of the rectangular tube portion 11 toward a front side as a whole. A tip part 123A, which is a front end part, of the resilient piece 123 is bent outwardly, i.e. leftwardly of the rectangular tube portion 11.

[Pressing Portion]

[0076] A pressing portion 124 is provided at a position near a front end part of the resilient piece 123. The pressing portion 124 is located on the rightmost side of the resilient piece 123. The pressing portion 124 is disposed at a position near the contact point portion 16 of the resilient piece 15 in the front-rear direction. As shown in FIG. 16, the pressing

portion **124** presses a side edge of the tab **41** inserted into the rectangular tube portion **11**. When the resilient piece **123** is in a natural state, an interval in the lateral direction between the fourth wall **14**B and the pressing portion **124** is set to be slightly smaller than a lateral dimension of the tab **41**.

[0077] As shown in FIG. **16**, with the tab **41** inserted at a proper position in the rectangular tube portion **11**, the tab **41** is sandwiched in the lateral direction between the fourth wall **14**B and the pressing portion **124**. In this way, a movement of the tab **41** in the lateral direction can be suppressed even under a vibration environment such as an automotive vehicle. Thus, it is possible to suppress the wear of the tab **41**, the resilient contact piece **15** and the receiving portion **19** due to a movement of the tab **41** in the lateral direction and ensure the connection reliability of the terminal **110** and the mating terminal **40**.

[Projecting Portion]

[0078] As shown in FIGS. **13** and **14**, the third wall **14**A on a side in front of the resilient piece **123** is formed with a projecting portion **130** projecting inwardly (here, rightwardly) of the rectangular tube portion **11** from the third wall **14**A. The projecting portion **130** is formed by being struck rightward. The projecting portion **130** is disposed substantially at the same height position as the resilient piece **123**. An interval in the lateral direction between the fourth wall **14**B and the projecting portion **130** is preferably set to be equal to the lateral dimension of the tab **41**. Here, substantially equal means equal if manufacturing tolerances and the like are not considered.

[0079] The projecting portion **130** is preferably formed to extend in the front-rear direction. In this embodiment, the projecting portion **130** extends rearward until reaching an edge of an opening formed by cutting and raising the resilient piece **123**.

[0080] If the insertion of the tab **41** into the rectangular tube portion **11** is started, the tab **41** first comes into contact with the projecting portion **130** in front of the resilient piece **123**. If the tab **41** is further inserted into the rectangular tube portion **11**, the tab **41** comes into contact with the resilient piece **123** as shown in FIG. **15**. That is, since the resilient piece **123** is protected from front by the projecting portion **130**, the resilient piece **123** is less likely to be deformed by being brought into contact with the tab **41**.

[0081] If the projecting portion **130** is not provided unlike this embodiment, the tab **41** faces and contacts the resilient piece **123** in the front-rear direction and possibly deforms the resilient piece **123**, for example, when the tab **41** is inserted into the rectangular tube portion **11** while sliding in contact with the third wall **14**A. However, in this embodiment, a position where the tab **41** contacts the resilient piece **123** is adjusted by the projecting portion **130** contacting the tab **41** earlier than the resilient piece **123**. Thus, the deformation of the resilient piece **123** due to improper contact of the tab **41** can be suppressed.

[0082] Since the resilient piece **123** is cantilevered forward and the pressing portion **124** is disposed on a front end part of the resilient piece **123** in this embodiment, the pressing portion **124** is disposed near the projecting portion **130**. According to this arrangement, the resilient piece **123** is less likely to be pushed outwardly of the rectangular tube portion **11** by the tab **41**, for example, even if the tab **41** is inserted in an oblique posture. Therefore, the deformation of the resilient piece **123** can be further suppressed.

[0083] If the interval in the lateral direction between the fourth wall **14**B and the projecting portion **130** is substantially equal to the lateral dimension of the tab **41** as shown in FIG. **16**, the tab **41** is sandwiched in the lateral direction by the projecting portion **130** and the fourth wall **14**B. Further, if the projecting portion **130** extends in the front-rear direction, the projecting portion **130** comes into line contact with the tab **41**. Thus, the insertion of the tab **41** in an oblique posture can be suppressed by the projecting portion **130**. Therefore, the deformation of the resilient piece **123** is more easily suppressed by the projecting portion **130**.

[0084] As described above, if the tab **41** is sandwiched in the lateral direction by the projecting portion **130** and the fourth wall **14**B, the vibration of the tab **41** in the lateral direction in the rectangular tube portion **11** can be suppressed under a vibration environment. Thus, the wear of the tab **41**, the resilient contact piece **15** and the receiving portion **19** due to vibration can be suppressed and the connection reliability of the terminal **110** can be further improved. Further, by suppressing the vibration of the tab **41**, it can be suppressed that stress is repeatedly applied to the resilient piece **123**. Therefore, the settling of the resilient piece **123** can be suppressed even under a vibration environment.

[Functions and Effects of Second Embodiment]

[0085] According to this embodiment, the following functions and effects are achieved.

[0086] The terminal **110** according to this embodiment is provided with the rectangular tube portion **11**, into which the tab **41** of the mating terminal **40** is inserted from front, the resilient contact piece **15** provided in the rectangular tube portion **11** and the receiving portion **19** provided in the rectangular tube portion **11** and configured to sandwich the tab **41** together with the resilient contact piece **15**. The rectangular tube portion **11** includes the first wall **12** provided with the resilient contact piece **15**, the second wall **13** provided with the receiving portion **19** and the pair of side walls **14** connecting the both side edges of the first wall **12** and those of the second wall **13**. The facing direction of the pair of side walls **14** is the first direction. One (third wall **14**A) of the pair of side walls **14** includes the resilient piece **123** for suppressing a movement of the tab **41** in the first direction by pressing the side edge of the tab **41** inwardly of the rectangular tube portion **11** in the first direction, and the projecting portion **130** disposed in front of the resilient piece **123** and projecting inwardly of the rectangular tube portion **11**.

[0087] According to this configuration, since a movement of the tab **41** in the first direction is suppressed by the resilient piece **123**, the wear of the tab **41**, the resilient contact piece **15** and the receiving portion **19** can be suppressed even under a vibration environment and the connection reliability of the terminal **110** and the mating terminal **40** can be ensured. Since the projecting portion **130** is provided in front of the resilient piece **123**, the tab **41** comes into contact with the projecting portion **130** earlier than the resilient piece **123** when being inserted into the rectangular tube portion **11**. Therefore, the deformation of the resilient piece **123** due to contact with the tab **41** can be suppressed.

[0088] In this embodiment, the resilient piece **123** extends in the front-rear direction, the rear end part of the resilient piece **123** is connected to one of the pair of side walls, and

the pressing portion **124** for pressing the tab **41** is disposed at the position near the front end part of the resilient piece **123**.

[0089] According to this configuration, since the pressing portion **124** of the resilient piece **123** is disposed near the projecting portion **130**, the deformation of the resilient piece **123** is more easily suppressed.

[0090] In this embodiment, the tab **41** inserted into the rectangular tube portion **11** is sandwiched between the projecting portion **130** and the other (fourth wall **14**B) of the pair of side walls **14**.

[0091] According to this configuration, since the tab **41** is sandwiched between the projecting portion **130** and the other of the pair of side walls **14**, the wear of the tab **41**, the resilient contact piece **15** and the receiving portion **19** can be further suppressed under a vibration environment.

<Other Embodiments>

[0092] (1) Although the resilient piece **23** is provided only in the third wall **14**A and the pushing portion **28** is provided on the fourth wall **14**B in the above first embodiment, there is no limitation to this and a resilient piece may be provided in each of a pair of side walls and a tab may be sandwiched in the first direction by a pair of the resilient pieces.

[0093] (2) Although the stopper portion **22** is provided in the second wall **13** in the above first embodiment, there is no limitation to this and a stopper portion may be provided in any one of first, third and fourth walls.

[0094] (3) Although the resilient piece **23**, **123** is cantilevered forward from the rear part of the third wall **14**A in the above first and second embodiments, there is no limitation to this. For example, a resilient piece may be cantilevered rearward from a front part of a third wall.

[0095] (4) Although the interval in the lateral direction between the fourth wall **14**B and the projecting portion **130** is substantially equal to the lateral dimension of the tab **41** in the above second embodiment, there is no limitation to this. For example, an interval in the lateral direction between a fourth wall and a projecting portion may be slightly larger than a lateral dimension of a tab.

[0096] (5) Although the projecting portion **130** extends in the front-rear direction in the above second embodiment, there is no limitation to this and a projecting portion may not extend in the front-rear direction.

[0097] (6) Although the fourth wall **14**B is not provided with the pushing portion **28** of the first embodiment in the above second embodiment, there is no limitation to this and a fourth wall may be provided with a pushing portion.

List of Reference Numerals

[0098] **10**: terminal
[0099] **11**: rectangular tube portion
[0100] **12**: first wall
[0101] **13**: second wall
[0102] **14**: side wall
[0103] **14**A: third wall v**14**B: fourth wall
[0104] **15**: resilient contact piece
[0105] **16**: contact point portion
[0106] **17**: excessive deflection preventing portion
[0107] **18**: locking portion
[0108] **19**: receiving portion
[0109] **20**: ridge portion
[0110] **21**: recess
[0111] **21**A: front surface
[0112] **21**B: rear surface
[0113] **22**: stopper portion
[0114] **23**: resilient piece
[0115] **23**A: tip part
[0116] **24**: pressing portion
[0117] **25**: body portion
[0118] **26**: extending portion
[0119] **27**: contact portion
[0120] **28**: pushing portion
[0121] **29**: projecting piece
[0122] **40**: mating terminal
[0123] **41**: tab
[0124] **110**: terminal
[0125] **123**: resilient piece
[0126] **123**A: tip part
[0127] **124**: pressing portion
[0128] **130**: projecting portion
[0129] B**1**: wire barrel
[0130] B**2**: insulation barrel

1. A terminal, comprising:

a rectangular tube portion, a tab of a mating terminal being inserted into the rectangular tube portion from front;

a resilient contact piece provided in the rectangular tube portion; and

a receiving portion provided in the rectangular tube portion, the receiving portion sandwiching the tab together with the resilient contact piece,

the rectangular tube portion including a first wall provided with the resilient contact piece, a second wall provided with the receiving portion and a pair of side walls connecting both side edges of the first wall and both side edges of the second wall,

a facing direction of the pair of side walls being a first direction, at least one of the pair of side walls including a resilient piece for suppressing a movement of the tab in the first direction by pressing a side edge of the tab inwardly of the rectangular tube portion in the first direction,

the rectangular tube portion including a stopper portion for suppressing a movement of a tip part of the resilient piece inwardly of the rectangular tube portion in the first direction,

the resilient piece including a contact portion disposed to face the stopper portion in the first direction,

the stopper portion being disposed between the resilient contact piece and the resilient piece in the first direction, and

the tip part of the resilient piece being suppressed from contacting the resilient contact piece by the contact of the contact portion and the stopper portion.

2. The terminal of claim **1**, wherein either one of the first and second walls includes the stopper portion.

3. The terminal of claim **2**, wherein the second wall includes the stopper portion.

4. The terminal of claim **1**, wherein:

the resilient piece includes a body portion long in a front-rear direction and an extending portion extending from a tip part of the body portion in a direction orthogonal to both the first direction and the front-rear direction, and

the extending portion includes the contact portion.

5. The terminal of claim **4**, wherein:

the rectangular tube portion includes a recess recessed in the first direction,

the recess includes the stopper portion, and

the extending portion is disposed inside the recess.

6. The terminal of claim **1**, wherein:

only one of the pair of side walls includes the resilient piece, and

the other of the pair of side walls includes a pushing portion for sandwiching the tab in the first direction together with the resilient piece.

7. A terminal, comprising:

a rectangular tube portion, a tab of a mating terminal being inserted into the rectangular tube portion from front;

a resilient contact piece provided in the rectangular tube portion; and

a receiving portion provided in the rectangular tube portion, the receiving portion sandwiching the tab together with the resilient contact piece,

the rectangular tube portion including a first wall provided with the resilient contact piece, a second wall provided with the receiving portion and a pair of side walls connecting both side edges of the first wall and both side edges of the second wall,

a facing direction of the pair of side walls being a first direction, and

one of the pair of side walls including a resilient piece for suppressing a movement of the tab in the first direction by pressing a side edge of the tab inwardly of the rectangular tube portion in the first direction and a projecting portion disposed in front of the resilient piece and projecting inwardly of the rectangular tube portion.

8. The terminal of claim **7**, wherein:

the resilient piece extends in a front-rear direction,

a rear end part of the resilient piece is connected to one of the pair of side walls, and

a pressing portion for pressing the tab is disposed at a position near a front end part of the resilient piece.

9. The terminal of claim **7**, wherein the tab inserted into the rectangular tube portion is sandwiched between the projecting portion and the other of the pair of side walls.

* * * * *