(No Model.) 2 Sheets—Sheet 1.

W. F. RICHARDS.

ELECTRIC LIGHTING APPARATUS FOR RAILROAD CARS.

No. 604,083. Patented May 17, 1898.

Fig. 1.

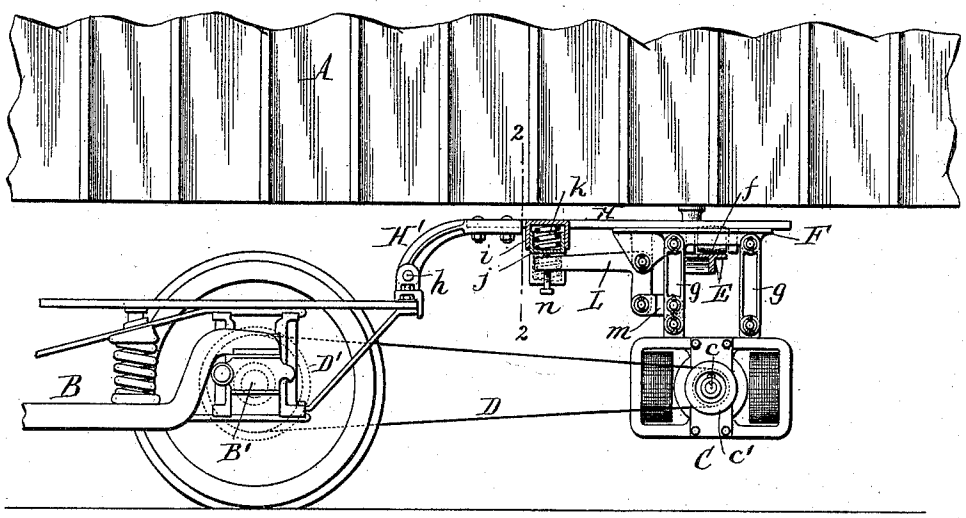

Fig. 2.

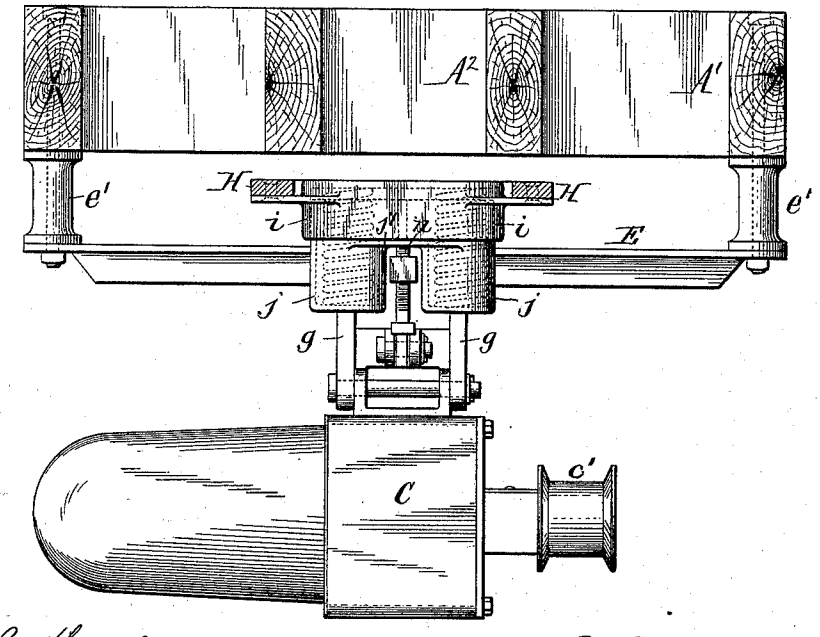

Witnesses:
Chas. F. Burkhardt.
Henry L. Deck.

W. F. Richards Inventor,
By Wilhelm Bonner
Attorneys.

THE NORRIS PETERS CO., PHOTO-LITHO., WASHINGTON, D. C.

(No Model.) 2 Sheets—Sheet 2.

W. F. RICHARDS.

ELECTRIC LIGHTING APPARATUS FOR RAILROAD CARS.

No. 604,083. Patented May 17, 1898.

Fig. 3.

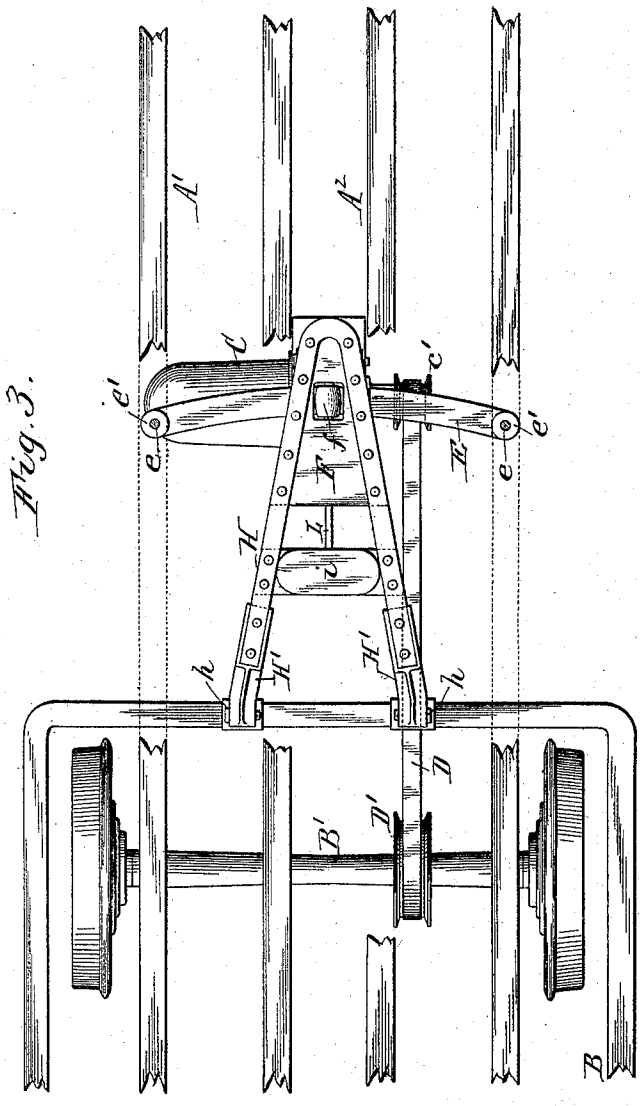

WITNESSES:
Chas. F. Burkhardt.
Henry L. Deck.

W. F. Richards INVENTOR.
By Wilhelm & Bonner.
ATTORNEYS.

THE NORRIS PETERS CO., PHOTO-LITHO., WASHINGTON, D. C.

UNITED STATES PATENT OFFICE.

WILLARD F. RICHARDS, OF BUFFALO, NEW YORK, ASSIGNOR TO CHARLES M. GOULD, OF SAME PLACE.

ELECTRIC-LIGHTING APPARATUS FOR RAILROAD-CARS.

SPECIFICATION forming part of Letters Patent No. 604,083, dated May 17, 1898.

Application filed September 25, 1897. Serial No. 653,003. (No model.)

To all whom it may concern:

Be it known that I, WILLARD F. RICHARDS, a citizen of the United States, residing at Buffalo, in the county of Erie and State of New York, have invented a new and useful Improvement in Electric-Lighting Apparatus for Railway-Cars, of which the following is a specification.

My invention relates to that class of electric-lighting apparatus for railway-cars in which the current is generated by a dynamo driven by a belt from one of the car-axles. In such apparatus the dynamo has generally been attached to the car-frame. On cars which run upon roads having sharp curves—for instance, elevated railroads—the trucks in passing through curves change their position with reference to the car-body to such an extent that the belt of a dynamo attached to the car-body is liable to run off the dynamo-pulley. On the other hand, if the dynamo were attached to the car-truck it would be subjected to all the vibrations and hard shocks to which the truck is subjected.

The object of my invention is to combine the dynamo with both the car-truck and the car-body in such a manner that it follows the swiveling movements of the truck and remains at all times in the proper relative position thereto to prevent the driving-belt from running off the pulleys, while the weight of the machine is substantially carried by the car-body, and the objections to mounting the same on the truck are avoided.

In the accompanying drawings, consisting of two sheets, Figure 1 is a fragmentary sectional side elevation of a railway-car and dynamo embodying my improvement. Fig. 2 is an enlarged transverse section thereof with the car-body omitted, the plane of the section being in line 2 2, Fig. 1. Fig. 3 is a top plan view of the parts.

Like letters of reference refer to like parts in the several figures.

A is the car-body, and A′ A^2 the longitudinal side and center sills of the car-frame.

B is the frame of one of the trucks, and B′ the inner or rear axle of the same.

C is the dynamo, *c* the armature-shaft having the driving-pulley *c′*, and D the driving-belt running around the pulley of the armature-shaft and a pulley D′, secured to the car-axle B′.

E is a transverse segmental track or way arranged in rear of the car-truck and suspended by bolts *e* from the under side of the longitudinal side sills A′ of the car-frame, the track being separated from the sills by thimbles or space-blocks *e′*, which surround the fastening-bolts.

F is a carrier or carriage which runs upon the segmental track E and from which the dynamo is suspended by links *g*, so as to move crosswise of the car with said carriage. These suspension-links are connected with projecting ears of the carriage-frame and the dynamo-frame by transverse pivots, so that the dynamo is capable of swinging toward and from the car-axle from which it is driven. In the construction shown in the drawings the carriage consists simply of a horizontal plate provided in its under side with reinforcing ribs or flanges, and a roller *f*, journaled in a central opening of the plate and running upon the curved track E, as shown. The dynamo is suspended from its carriage preferably by two pairs of links *g*, arranged on the front and rear sides of the track.

H is a connection or frame which connects the dynamo-carriage F with the frame of the car-truck in such manner that the carriage and dynamo are caused to follow the swiveling or angular movements of the truck in rounding curves, thereby always keeping the dynamo in alinement with the car-truck and preventing the driving-belt from running off the pulleys of the dynamo-shaft or the car-axle. The connecting-frame is preferably hinged or pivoted to the rear portion of the truck-frame by transverse pivots *h*, so as to permit the truck to rise and fall without transmitting its vibrations to the dynamo through the connecting-frame. The connecting-frame preferably consists of a V-shaped bar, of wrought-iron, having its rear portion bolted or riveted to the upper side of the carriage-plate F, and two downwardly-curved arms or front portions H′, of cast metal, which are pivoted at their lower ends to the car-truck and are bolted or riveted at the upper

ends to the members of the V-shaped bar, as shown in the drawings.

The dynamo-carriage moves laterally in an arc concentric with the pivot or king bolt on which the car-truck swivels, and the carriage-track E is curved concentrically with this king-bolt. By this construction the dynamo, while compelled to maintain its proper relative position to the car-truck in all positions of the latter, is carried by the car independently of the truck, and the same is therefore relieved from the jars and vibrations of the truck, which would interfere with the steady running of the dynamo.

Any suitable means may be employed for moving the suspended dynamo away from the driving car-axle, so as to tension the driving-belt.

The tension device shown in the drawings is constructed as follows: *i i* represent a pair of depending sockets or cylinders secured to the under side of the connecting-frame H between the dynamo-carriage F and the car-truck, and *j j* are cylindrical followers sliding vertically in said sockets and connected by a bridge-piece *j'*. *k k* are springs arranged in the sockets *i* and tubular followers *j* and tending to resist the upward movement of the followers in the sockets. L is an upright bell-crank lever pivoted to the front portion of the dynamo-carriage F by a transverse pin and having its lower arm connected with the front suspension-links *g* of the dynamo by a horizontal link *m*, while its upper arm carries an adjusting-screw *n*, which bears against the under side of the bridge-piece *j'*. It will be understood that by this construction the compressed springs *k*, through the medium of the followers *j* and the lever L, tend constantly to swing the suspended dynamo backwardly or away from the car-axle from which it is driven, thus keeping the belt taut. The tension of the belt can be regulated by adjusting the set-screw *n* up or down on the lever.

The conducting-wires, switches, and other accessories of the car-lighting system are not shown in the drawings, as they form no part of my invention.

I claim as my invention—

1. The combination with a car-body, a car-truck and its axle, and a dynamo driven from said axle, of a support on the car-body by which the dynamo is carried and which permits of the lateral movement of the dynamo with reference to the car-body, and a connection from the dynamo to the car-truck by which the dynamo is caused to remain in alinement with the car-axle, substantially as set forth.

2. The combination with a car-body having a transverse track on its under side, and a car-truck and its axle, of a dynamo capable of lateral movement on said track, and a pivoted frame which connects said dynamo with the truck and moves laterally with the truck, substantially as set forth.

3. The combination with a carriage adapted to move transversely on the under side of a car-body and a dynamo suspended therefrom and adapted to be driven from one of the car-axles, of a connecting-frame which connects said carriage with the car-truck and which causes the carriage and the dynamo to follow the swiveling movements of the car-truck and remain in alinement therewith, substantially as set forth.

4. The combination with a transverse track or way adapted to be arranged on the under side of a car-body, of a carriage mounted on said track, a dynamo suspended from said carriage and adapted to be driven from one of the car-axles, and a connecting-frame connecting said carriage with the car-truck and causing the carriage and the dynamo to follow the swiveling movements of the car-truck, substantially as set forth.

5. The combination with a transverse track or way adapted to be arranged on the under side of the car-body, of a carriage mounted on said track, a dynamo suspended from said carriage and adapted to be driven from one of the car-axles, and a connecting-frame adapted to connect said carriage with the car-truck carrying said axle and to be hinged to the truck by a transverse pivot, substantially as set forth.

6. The combination with a transverse track or way adapted to be arranged on the under side of a car-body, of a carrier or carriage adapted to run on said track, a dynamo suspended from said carriage and adapted to be driven from one of the car-axles and a connecting-frame adapted to connect said carriage with the car-truck carrying said axle, and a tension device for the driving-gear of the dynamo mounted on said connecting-frame, substantially as set forth.

7. The combination with a transverse track or way adapted to be arranged on the under side of the car-body and a carrier or carriage adapted to run thereon, of a dynamo adapted to be driven from one of the car-axles by a belt and suspended from said carriage by links swinging lengthwise of the car, a frame adapted to connect said carriage with the car-truck, a socket mounted on said connecting-frame, a follower moving therein, a tension-spring arranged in said socket and follower, and a lever operating with one arm against said follower and having its other arm connected with the suspension-links of the dynamo, substantially as set forth.

Witness my hand this 18th day of September, 1897.

WILLARD F. RICHARDS.

Witnesses:
JNO. J. BONNER,
KATHRYN ELMORE.