Dec. 11, 1956 J. A. MATHEWS 2,773,963

SWITCH MECHANISM

Filed Jan. 30, 1956 5 Sheets-Sheet 1

Fig. 1.

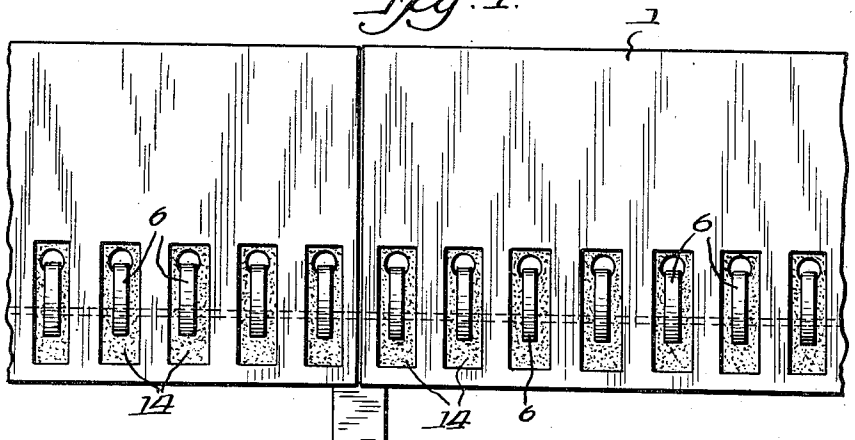

Fig. 2.

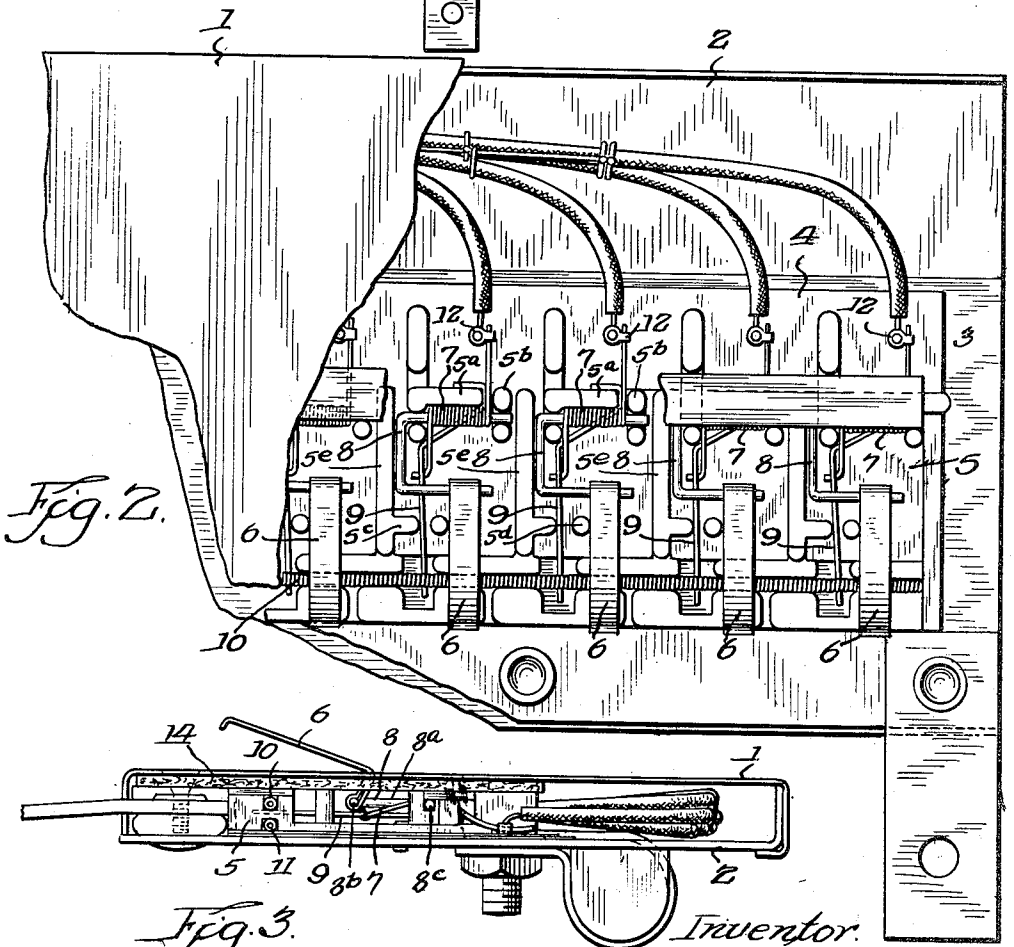

Fig. 3.

Inventor.
Joseph A. Mathews.
By. James R. Koehl.
Atty.

Dec. 11, 1956 J. A. MATHEWS 2,773,963

SWITCH MECHANISM

Filed Jan. 30, 1956 5 Sheets-Sheet 2

Fig. 4.

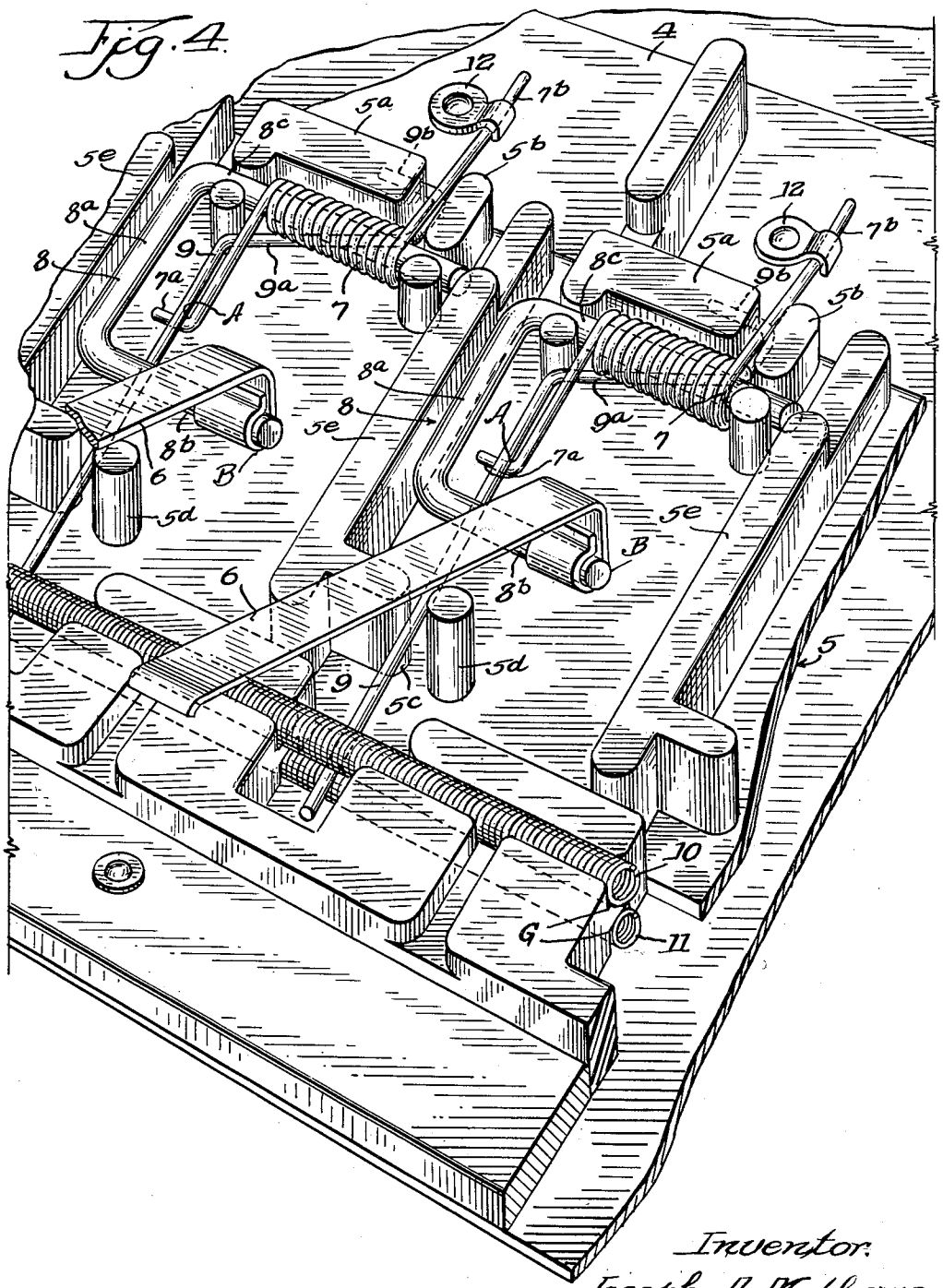

Inventor:
Joseph A. Mathews
By. James A. Koehl
Atty.

Dec. 11, 1956 J. A. MATHEWS 2,773,963

SWITCH MECHANISM

Filed Jan. 30, 1956 5 Sheets-Sheet 3

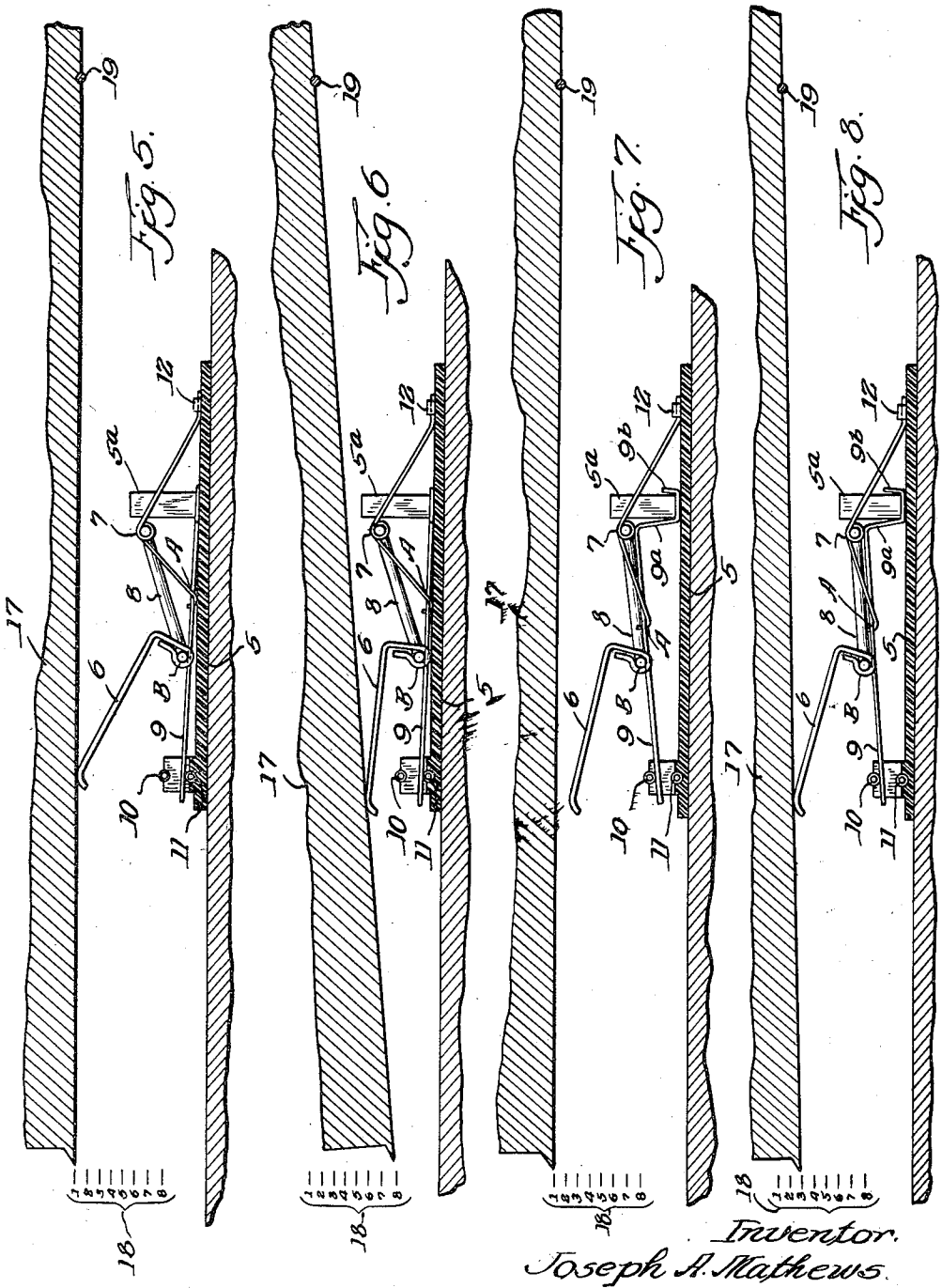

Inventor.
Joseph A. Mathews.
By James A. Koehler
Atty.

Dec. 11, 1956 J. A. MATHEWS 2,773,963

SWITCH MECHANISM

Filed Jan. 30, 1956 5 Sheets-Sheet 4

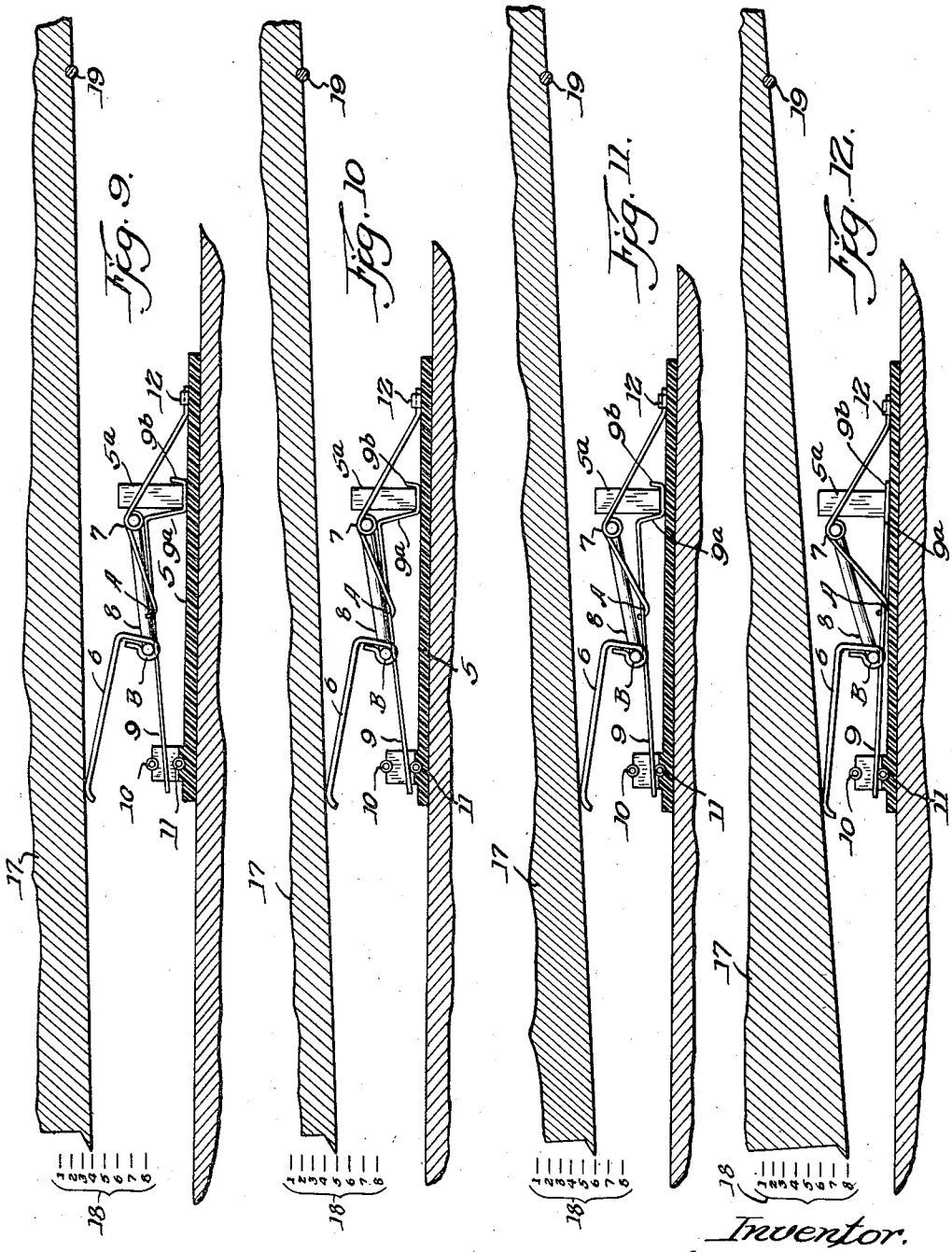

Inventor.
Joseph A. Mathews.
By James A. Koerner.
Atty.

Dec. 11, 1956 J. A. MATHEWS 2,773,963

SWITCH MECHANISM

Filed Jan. 30, 1956 5 Sheets-Sheet 5

Fig. 13.

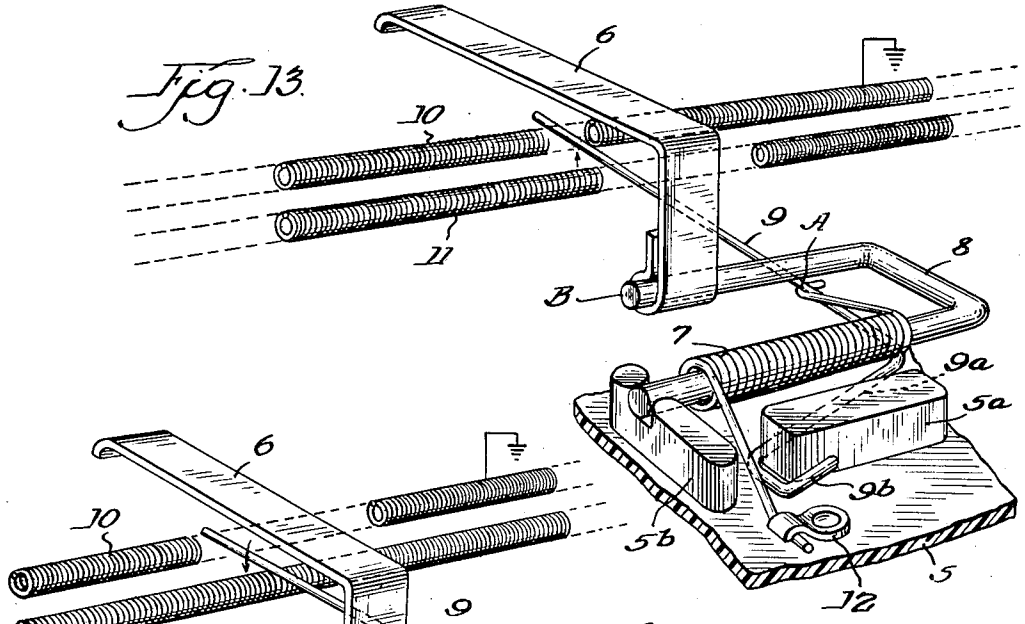

Fig. 4.

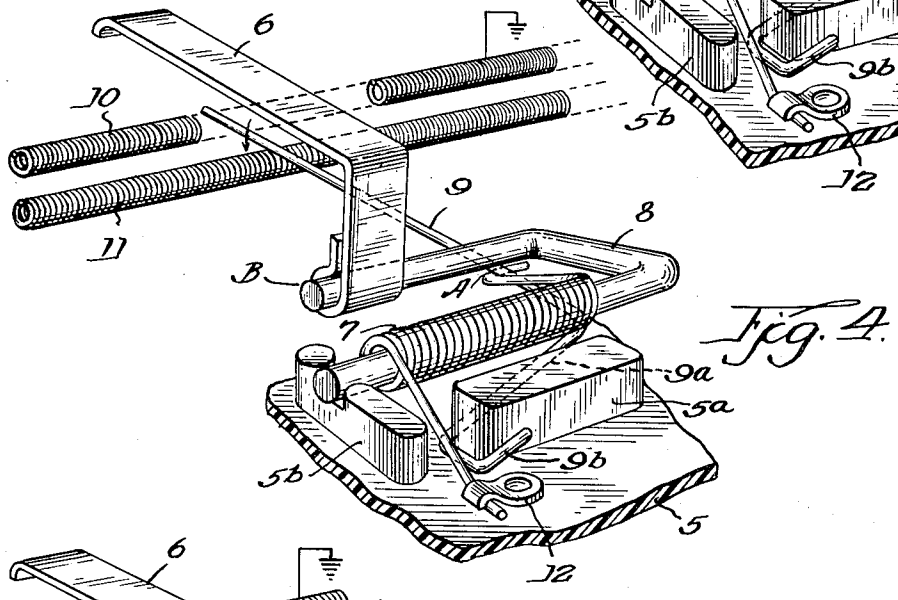

Fig. 15.

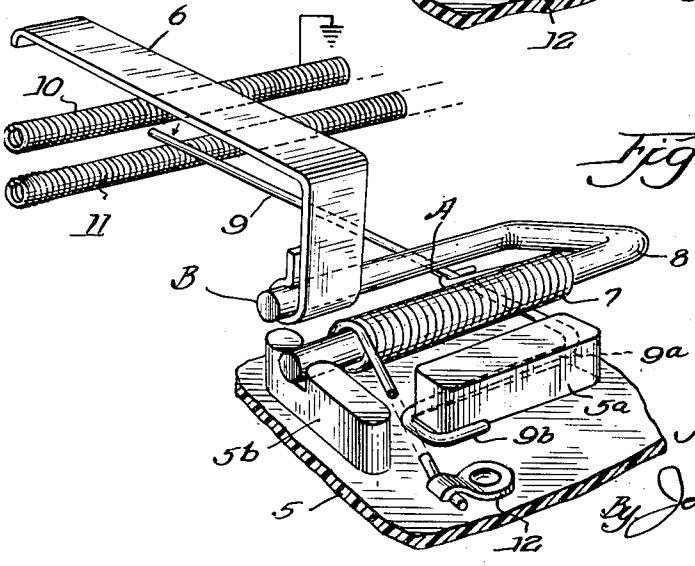

Inventor.
Joseph A. Mathews.
By James R. Koehler
Atty.

United States Patent Office 2,773,963
Patented Dec. 11, 1956

2,773,963

SWITCH MECHANISM

Joseph A. Mathews, Barrington, Ill., assignor to Central Commercial Company, Cook County, Ill., a corporation of Illinois

Application January 30, 1956, Serial No. 562,312

14 Claims. (Cl. 200—153)

This invention relates to electrical switching means and particularly to a type of non-locking switch mechanism adapted for use in association with mechanisms for selective control of electrical or electronic equipment such as computers, musical instruments, servomotors, counting and packaging machines, etc.

Certain of the more important features of the invention are:

(1) The provision of a switch mechanism having extremely low inertia and hence suitable for high speed operation.

(2) The provision of a switch mechanism which permits accurate correlation between position of actuator and operation of switch.

(3) The provision of a switch mechanism having extremely low noise output when actuated.

(4) The provision of a switch mechanism requiring very light pressure to operate and having the unique or unusual characteristic of allowing a large amount of overthrow or contact range with a scarcely perceptible build-up of contact pressre or actuator resistance.

(5) The provision of a switch mechanism having both rotary and wiping action after initial contact.

(6) The provision of a switch mechanism in which both fixed and moving members experience a change of contact point after initial contact is made, thereby distributing wear.

(7) The provision of a switch mechanism having the features already mentioned plus the advantage of double contact points at all times with a single moving contact member.

(8) The provision of a switch mechanism of the aforementioned type in which actuation pressure, contact pressures, transfer time, etc. can be accurately and simply controlled.

(9) The provision of a switch mechanism having no contact "bounce" under high speed operation.

(10) The provision of a switch mechanism which, because of the combination of features set forth in paragraphs 4, 5, 6 and others to be described later, is capable of an almost unlimited life and is not affected by fatigue of spring materials or overstress because of excessive motion.

(11) The provision of a switch mechanism which, in combination with the above features, can be readily assembled in the proper housing without fastening of any kind and be self-retaining by virtue of its own spring tension.

(12) The provision of a switch mechanism having one or more of the above features in which any moving part may be easily replaced without tools and without destruction of other parts.

(13) The provsion of a switch mechanism having means to automatically adjust itself to variable spacing between switch and actuating means, as well as to variable motion of said means.

(14) The provision of a switch having a chosen range of contact as referred to the motion of actuating means, and having the ability to adjust itself accordingly should said motion increase.

(15) The provision of a switch mechanism which cannot be damaged should motion of actuating means considerably exceed its normal limit.

The above and further objects of the invention will be more readily understood by the following description of one embodiment thereof, this being a specific adaptation for use with an electronic musical instrument operated by a keyboard, such as used on a piano, organ or as described in the Mathews et al. Patent No. 2,707,896.

It should be understood that the form of the invention described below represents only one adaptation of this invention which is understood to include all variations conceivable within the scope of the annexed claims and to those familiar with the art.

Reference is made to the accompanying drawings wherein—

Figs. 1, 2 and 3 represent respectively the plan or top view, with the cover of the housing removed and parts in section through a commercial unit designed for operation from the keyboard of an electronic organ. Only a portion of the unit is shown, as other parts would merely be repetitive and can be manufactured for any given number of notes.

Fig. 4 is a greatly enlarged sectional perspective view of a portion of one unit of the mechanism showing two complete and identical switch mechanisms.

Figs. 5 to 12 inclusive show, by schematic illustrations, a sequence of different conditions in the operation of a single switch.

Figs. 13, 14 and 15 are perspective views showing the invention on an enlarged scale and illustrating, (*a*) Fig. 13, the switch in an "off" or relaxed position; (*b*) Fig. 14, the switch in the position of first contact, and (*c*) Fig. 15, the switch at the end of the stroke or lowest position.

In carrying the invention into practice for the specific application aforementioned, use is made of a plurality of similar switches contained in a housing consisting of a base plate **2** and a cover **1**, which is sectional for ease of access, as shown in Figs. 1, 2 and 3.

Fastened to the base plate **2** by means of rivets or other suitable fastener, not shown to avoid confusion, are in order—a strip of insulating paper or tape **3**, a strip of insulating material **4** carrying suitable connecting lugs **12** and, finally, a rather intricate molded plastic piece **5** encompassing several switches and providing suitable barrier walls between switches as well as all the supporting and containing structure necessary for the switches themselves.

To each switch is attached a finger **6**, intended for external operation, which passes through the felt dust seal **14** and protrudes through rectangular holes in the cover **1**. The entire upper half of the housing shown in Fig. 2 is left vacant to provide space for cable and wiring.

Fig. 4 illustrates the essential elements of one form of the invention as used in the application described above. These elements consist of a torsion coil spring **7**, the contact member **9** and the actuator **8**.

I prefer to wind the torsion spring **7** with a plurality of turns in order to achieve high compliance in a small space and to permit a substantial angular rotation without sensible change of force. One end **7***b* of this spring is carried tangentially away from the axis and is held down by lug **12**. Either the end **7***b* of the spring wire itself or lug **12** may be used for attaching an external connection.

The left-hand end of spring **7** leaves the coil tangentially but is formed in a bend or hook **7***a* at its extremity to engage and support contact member **9**. It should be understood that spring **7** is at all times wound up in

a clockwise direction, as viewed from either end, to a certain tension. I prefer to form contact member **9** from one piece of wire and in a shape similar to a crank near one end, as shown at **9***a* and **9***b* in Fig. 4. This offset portion **9***a* extends under coil spring **7**, but the straight portion of **9** passes over the hooked end **7***a* of **7**, which, by virtue of winding tension, is always lifting upward.

The actuator **8** is preferably formed from comparatively heavy wire formed into two parallel legs **8***b* and **8***c*, which I prefer to produce by a **U** shape. One of these legs **8***c* passes freely through and acts as an axis and support for spring **7**. Beyond the coiled portion of **7**, leg **8***c* passes through journals or bearings **5***a* and **5***b* which support **8** and the spring body of **7** at a suitable height for free operation.

It should be understood that both ends of spring **7** are being held down—one end **7***b* by being trapped under lug **12**, and the other end **7***a* by contact member **9** which, in turn, is trapped under bus-bar or "off" contact element **10**. Since both ends of spring **7** are trying to rise because the spring is wound up in a clockwise direction but are prevented from doing so by **9** and **12** as previously explained, the net reaction on the coiled body of spring **7** is a strong downward thrust which maintains actuator **8** firmly seated in its bearings (which are open at top) without further restraint.

In the commercial form of the invention shown in all of the drawings, plastic molding **5** provides the journals and supports **5***a*, **5***b* for **8** which also maintain spring **7** in loosely confined position, as well as barrier walls **5***e* which prevent excessive axial motion of **8**, and grooves for containing fixed contact bus-bars **10** and **11** and maintaining them in accurate position with respect to each other and to the rest of the mechanism.

The two fixed contacts of the switch represented in this embodiment by the bus-bars **10** and **11** are novel in that they are closely wound coil springs of small diameter with relationship to wire size, and they are wound with maximum initial tension between turns, which results in a spring of exceptional stiffness and straightness. These contacts **10** and **11** could be formed by grooving or threading solid straight wire as in co-pending application of Mathews and Mann, Ser. No. 466,738, or by knurling or notching strip or rod by means well known to those familiar with mechanical arts. Since contact member **9** is only loosely guided in a lateral direction by guide bosses **5***c* and **5***d*, it will always assume a position upon contact with either **10** or **11** in a trough between turns or peaks, resulting in two tangential contact points assuring low resistance and dependable contact even under adverse conditions.

The distance between the bus-bars **10** and **11** minus the diameter of contact **9** determines the transfer or no contact distance in switch motion. In the particular device described herein it is desirable to keep this transfer time to a minimum, hence the distance between bus-bars **10** and **11** is only .010" greater than the diameter of contact wire **9**.

As already described, the hooked end **7***a* of torsion spring **7** is pressing upward on contact member **9**. Referring to Figs. 4 and 13, it is seen that a position of stable equilibrium has been reached in the "off" or relaxed position, since the upward pressure of **7***a* has been balanced by contact pressure of member **9** against bus-bar **10**, and portion **9***a* against the under side of coil **7**. Contact pressure of member **9** against bus-bar **10** will be a percentage of the pressure exerted by spring **7***a* at the junction A of **7***a* and **9**. This percentage can be expressed as the ratio of distances

$$\frac{A \text{ to } 8c}{10 \text{ to } 8c} \times 100$$

In the commercial form of the invention described in these drawings, the front leg **8***b* of acuator **8** is shown

resting on top of and intersecting contactor **9** at its approximate operating center, while point A is approximately ⅓ of the length of member **9** away from the common axis **8***c*. A downward pressure on **8** at point B of ⅓ less than pressure of **7***a* upward at point A will cause contactor **9** to reach zero contact pressure against bus-bar **10** and slightly more downward pressure at B will cause contactor **9** to leave bus-bar **10** and approach bus-bar **11**. Up to this time, all motion has been rotary with the axis of rotation being **8***c*. However, the moment that member **9** contacts lower bus-bar **11** it can no longer move downward at the point of contact and this point becomes the fulcrum for rotation of member **9**. Actuator **8** and hook **7***a* of spring **7** can only rotate about their common axis **8***c*, so that further motion of point B in a downward direction results in a more rapid depression of point A which now rotates at an angular velocity ⅓ greater than that of actuator **8**, in effect winding up the spring **7** at a more rapid rate than indicated by the rotation of **8** about its axis. It should be remembered, however, that the number of turns of the coiled portion of **7** are such that even a large angular rotation results in a very small change in torsional force exerted at point A; thus a considerable motion downwards of point A is possible after contact of member **9** with bus-bar **11** without noticeable buildup of contact pressure between member **9** and bus-bar **11**. It is interesting to note that when switch was relaxed, pressure of member **9** on the upper bus-bar **10** was ⅓ the force exerted by torsion spring **7** at point A, while after transfer of movable member **9** to lower bus-bar **11** and going well beyond, the pressure on lower bus-bar **11** is still ⅓ of torsion pressure at point A. This is true because the length of member **9** from point of engagement with bus-bar **11** to intersection with leg **8***b* is three times the distance from this intersection to point A. This is based on the assumption that the force exerted by spring **7** is constant throughout motion, which is approximately true.

The downward motion of **8** is terminated when point B strikes the bottom surface, which is also part of plastic molding **5**. This limitation of motion is a requirement peculiar only to the particular form of the invention illustrated in Figs. 1 to 4.

Figs. 13, 14 and 15 respectively show more clearly what happens to contact wire **9** during a cycle of operation similar to that just described. Fig. 13 shows switch in relaxed or "off" position with member **9** in contact with upper bus-bar **10** and portion **9***a* in contact with spring **7**. Fig. 14 shows member **9** as it has just contacted lower bus-bar **11** but **9***a* still in contact with coil **7**. Fig. 15 shows limit of downward or "on" motion, with member **9** still contacting bus-bar **11** but portion **9***a* flat against base at rear end under coil spring **7**. Again referring to Figs. 13, 14 and 15, it is evident that the hooked end **9***b* of member **9**, besides maintaining the longitudinal position of member **9**, also acts as a pivot for the offset portion **9***a*, causing axial rotation of member **9** as if it were cranked. This action twists the straight forward portion of member **9** after contact thereof with bus-bar **11** only. This same rotary action also changes the point of tangency where contactor **9** touches bus-bar **11** and because of restraint of hook **9***b* changes the effective length of member **9** to point of contact with bus-bar **11**. Thus, point of contact between contactor **9** and bus-bar **11** is never the same for either of these elements for any different point of the "on" range.

Another novel feature of this invention is a self-adjusting feature incorporated in the finger **6**. This part could be made in several forms, but I prefer to make it of deal soft beryllium copper strip formed into a loop of small diameter near one end, as shown at B, and hardened after forming. The loop of finger **6** at B is slightly smaller than the diameter of wire from which actuator **8** is formed. After finger **6** is formed, it is heat-

treated at 600° F. for 2 hours, at which time it has reached a hardness comparable to spring steel. Finger 6 is then pressed over the leg 8*b* of actuator 8 at point B, which it grips with a force predetermined by dimension of looped portion of finger 6, thus providing a friction grip which will retain a fixed position relative to actuator 8 unless the latter is held and a force in excess of a fixed amount is applied to the free end of finger 6. For reasons to be discussed later, it is important that slippage occur at B before the force applied to free end of 6 causes any substantial or appreciable bending or springing of the finger 6 itself. For best performance in the particular adaptation of the invention herein disclosed, finger 6 and actuator 8 should be as rigid as possible and yet be light in weight and possessed of a relatively large surface at free end and at B. It is also important to avoid corrosion. At the same time the material for parts 6 and 8 must be ductile to permit sharp bending in forming. It is for the foregoing reasons that I prefer to use an alloy of copper 98% and beryllium 2% for both finger 6 and actuator 8.

Other essential parts of the mechanism such as 7, 9, 10 and 11 have the same requirements plus the additional requirements of providing good electrical conduction and low contact resistance. I also prefer to make these elements of pretempered BeCu alloy wire which has been pre-plated with a substantial silver coating during wire drawing and therefore involves no treatment either by heat or electrolytic action after fabrication. Actuator 8 is also preplated, since it is also an important electrical element of the switch and contact member. The silver coating is also very effective as a lubricant for friction grip at point B. The silver coating at this point prevents galling, freezing and abrasion between the two hardened pieces (finger 6 and actuator 8). In addition, the film of silver (which is very soft relative to BeCu alloy) maintains smooth and uniform torque during many cycles of rotation of clutch B.

It will be noted that there is no solid connection between lug 12 and contact member 9 but there are two parallel paths of current flow from 9 to 12—one said path being through actuator 8 which contacts 9 and, in turn, makes multiple pressure contact with the coiled portion of 7. Another path is by high pressure contact with spring 7*a* at point A. In practice, no trouble has been encountered with this indirect method. In this connection, it should be noted that all points of contact from member 9 through to lug 12 are silver to silver and under considerably higher pressure than the switch contact itself as provided between contactor 9 and bus-bars 10 or 11.

An important feature of the invention relates to the location of pivoting means for contact member 9 either below or in close relationship to the common axis 8*c* of members 7 and 8. Taken together this relationship of elements provides little or no relative motion other than rolling between 8 and 9 or at A, thus, reducing wear to a minimum at points of greatest pressure.

It is assumed that little or no compliance or flexing takes place in finger 6 or actuator 8 at any time, since such action would result in point B (Figs. 4 and 6) striking base 5 every time the switch is actuated, as will be apparent from the following description.

So far in this description no mention has been made of the reason for the slip clutch and self-adjusting feature between finger 6 and actuator 8 at B.

In the introduction, mention was made of the specific usage of the commercial form of the invention herein described by attached drawings. This usage requires the device to selectively control the tones of an electronic organ by the individual depression of the playing keys of a piano keyboard. In this usage it is necessary that a unit consisting of a plurality of the switch elements herein described be placed under the keys of a piano and make contact to provide predetermined tones from the organ when specific piano keys are depressed. It is necessary that all organ notes sound for a fixed part of the key motion. This part is commonly preferred to be the last half of the total stroke.

Since a considerable variation exists in the under surface of wooden keys, their lowest point of motion when depressed and the relationship of this point to mounting surfaces beneath them, a considerable adjustment of coupling between keys and switches must be provided in order to enable a plurality of such switches to provide the same response and playing range in pianos of many different makes and even between individual keys of the same piano.

It is inconvenient and time-consuming to adjust 60 or more individual switches to their respective keys, and even if this were done, wear of felt stops, etc. would in time increase the playing time and overstress the switch or coupling.

The present invention provides automatic self-adjustment of each switch and compensation for increased motion with age or wear, and represents an improvement over method disclosed in the Larsen Patent No. 2,714,145, since pressure can never exceed the predetermined amount built into friction grip or clutch at point B, and no build-up of pressure between finger 6 and key takes place in normal operation.

Reference is now made to Figs. 5 to 12 inclusive to illustrate the full cycle of operation of commercial form of the invention herein disclosed. In the interest of clarity, Figs. 5 to 12 inclusive have been skeletonized, changed in scale and all non-essentials removed. All of these figures represent a vertical section through an individual switch mechanism which is now shown in fixed relationship to a scale of motion 18 and pivot 19 associated with a piano key 17 shown in partial section. The scale 18 shows the position of the key by the pointed end of key 17. Number 1 indicates relaxed or non-playing position which is also the highest position of key. Number 8 corresponds to lowest position of key under heavy finger pressure. The limits of key motion corresponding to numbers 1 and 8 of scale 18 are determined by stops of felt or similar resilient material associated with the keyboard and which are not shown in the drawings.

Again referring to Figs. 5 through 12, it should also be understood that leg 8*c* is supported in fixed position relative to 5 by the bearings or trunnions 5*a* and 5*b* of Fig. 4 which are omitted for clarity. In like manner, felt upstop 14 and cover 1 of Fig. 3 are not shown. However, if the aforesaid upstop and cover were shown in their proper position, they would permit lifting of actuator 8 only slightly above the horizontal.

Advantage is taken of this latter fact before installation of the switch assembly under the keyboard by pulling up on the left or free end of fingers 6 until they stand at an angle of only 30° to 40° from the vertical when free. In doing this, finger 6 (Fig. 5) is forced to rotate clockwise about actuator 8 at clutch B, so that before key 17 is installed, the free end of finger 6 would be much higher than shown in Fig. 5. Presuming that the preliminary adjustment just described has been made, the mere installation of key 17 in place as shown in Fig. 5 without depression will cause clutch B to be driven down to base 5, causing contactor 9 to touch bus-bar 11. This causes the organ to play even though key 17 is at rest or in a non-playing position. In an instrument containing a plurality of keys and switches, this condition would result in simultaneous sounding of all notes.

Referring now to Fig. 6, however, we see the key 17 depressed to the limit of its motion as it would be in very hard playing. This is Number 8 position on scale 18. This figure shows that no change has occurred in the position or relation of elements 7, 8, 9, 10 or 11 of the switch, but finger 6 has been forced to rotate counterclockwise about clutch B until it forms an angle of only

approximately 20° with the plane of actuator 8. This angle thenceforth remains unchanged.

Fig. 7 shows key 17 returned to its relaxed or scale 1 position. It will be noted that finger 6 has been lifted by action of spring 7 on member 9 to its uppermost or rest position. It will not rise higher because contactor 9 has made contact with bus-bar 10, which in common practice is grounded to silence a signal or note source. It should also be noted that finger 6 has not been able to follow key 17 back to Number 1 position and that there is no longer physical contact between 6 and 17.

Fig. 8 represents the beginning of the second stroke of key 17. The key has been depressed to position 3 and has just re-established contact with finger 6. No change from Fig. 7 has taken place in the switch mechanism and the note is still silent.

Fig. 9 shows key 17 at position 4 or ⅜ stroke. Contactor 9 has left ground bus-bar 10 and is halfway to playing bus-bar 11. Spring 7, however, is still holding offset 9*a* up against coiled body of 7. No contact is being made so that note does not sound.

Fig. 10 shows key 17 at position 5 or ½ stroke. Contactor 9 has just touched playing bus-bar 11 and note is sounding. Relationship of elements 7, 8 and 9 to each other has not changed in Figs. 7, 8, 9 and 10 and all motion has been rotational about 8*c* as center.

Fig. 11 shows key 17 in position 6 or ¾ stroke. Contactor 9 has now begun to rotate about its point of contact with bus-bar 11 as center, thereby separating portion 9*a* for the first time from coil of spring 7. This downward motion of section 9*a* of contactor is accomplished by rotation about hook 9*b* as center. Note still plays.

Fig. 12 illustrates the final or No. 8 position of key 17 at completion of stroke. Clutch B is at or near contact with base 5 and all elements are in the same position as shown in Fig. 6, with contactor section 9*a* almost parallel with base 5. Note still plays because contactor 9 is still in contact with bus-bar 11.

A release of key 17 will restore all conditions to those of Fig. 7 and the sequence of events depicted in Figs. 7 through 12 will be repeated every time the key 17 is depressed. If wear or packing of felt stops permits key 17 to go beyond position 8 after long use, clutch B will take a small additional set to compensate for the added motion, but playing range (4 to 8) will remain constant with respect to bottom of stroke.

The design of cover 1 with its rectangular openings to felt 14 permits fingers 6 to be depressed until they are flush with said cover, effectively protecting the entire mechanism from accidental damage and permitting assembly to be used in very limited space. The overall outside thickness, for example, of the adaptation herein disclosed being only ¼".

I prefer to mold base 5 of nylon because of its resilience under impact, low friction characteristic as bearing material, inherent quietness and remarkable wearing qualities, but this choice is not necessary or essential to the invention disclosed herein. Anyone versed in the art will readily appreciate that dimensions of elements and form of fingers may be varied to suit a wide range of actuating means and conditions.

While I have described more or less precisely the details of construction, I do not wish to be understood as limiting myself thereto, as I contemplate changes in form, the proportion of parts and the substitution of equivalents as circumstances may suggest or render expedient without departing from the spirit or scope of the invention.

What I claim as my invention is:

1. An electrical switch mechanism of single pole single throw, or single pole double throw spring return type consisting of an organization of coactively related elements comprising a torsion spring wound in coil form; a rigid actuator having two parallel extensions of round cross section; a contactor of elongated form which is free

to move within limits in a plane normal to the axis of the torsion spring but which is confined sufficiently in other directions to insure proper coaction with all other elements, fixed contact members suitably disposed about said contactor, and a flat metallic, depressible, angular finger having a portion coactive with one of said parallel extensions to form therewith a friction clutch enabling pivotal motion of the finger about the axis of said extension and a change in angular motion of the finger from a non-permanent angle to a permanent angle in response to downward pressure applied a first time thereto.

2. A switch mechanism according to claim 1 wherein one extension of the actuator is passed longitudinally through the coil of the torsion spring and is of a diameter small enough to permit free rotation of the coil about said extension.

3. A switch mechanism according to claim 1 wherein one extension of the actuator is passed longitudinally through the coil of the torsion spring and is of a diameter small enough to permit free rotation of the coil about said extension and wherein pivot and support means are provided for the actuator, said means also serving to limit the torsion spring against longitudinal motion.

4. A switch mechanism according to claim 1 wherein the contactor is limited in motion near one of its ends by fixed contacts, the other end thereof being free to move principally in the direction of motion of the actuator, and means to limit said motion in one direction.

5. Mechanism according to claim 1 wherein means are provided by which motion of the actuator under pressure may be continued for a substantial distance beyond the point at which the contactor engages one of the fixed contacts, with no substantial increase of said pressure and with no substantial increase of pressure between said one fixed contact and the contactor.

6. A switch mechanism according to claim 1 in which means are provided enabling substantial excess motion of the actuator beyond the point of engagement of the contactor with one of said fixed contacts and wherein said excess motion is converted to both rotary and wiping action between surfaces of the contactor and said contact together with a continuous motion of said point of engagement on both the contactor and the contact.

7. An electrical switch mechanism of the single pole single throw or single pole double throw spring return type comprising a movable contactor, fixed contacts, a U-shaped actuator for conveying motion to the contactor and spring return means coactive with said contactor, said actuator including two sections, one of which is a vertically depressible metallic finger, coupled by a friction grip to the other section and slips rotationally thereon upon application of torque to said grip in excess of that encountered in a first operation of the switch in response to depression of said finger.

8. A switch mechanism according to claim 7 in which means are provided including a stop to cause said friction grip to slip if motion greater than that required for intended operation of the switch is imparted to said actuator.

9. A switch mechanism according to claim 1 in which the actuator comprises two parts, one of which is formed of round wire and the other thereof of spring material formed to grip said first part under spring pressure and having a portion extending radially from said first part, thereby permitting mutual rotation of one of said parts about the other as an axis upon application of a torque to the grip in excess of that encountered in normal operation of the switch.

10. A switch mechanism according to claim 1 wherein said fixed contacts each consist of round wire formed into a closely wound coil disposed at right angles to the movable contactor and wherein said contactor is formed of round wire.

11. A switch comprising a U-shaped member providing parallel spaced apart first and second portions and a con-

necting portion; means forming a bearing in which the first portion of said member is mounted for tilting motion of said member; a stop, a contact, a rectilinear contactor respectively coactive with the stop and said contact; and a coil spring through which said first portion passes axially thereof, said spring being fixed at one of its ends and provided at its other end with an extension which engages said contactor and urges same against said stop.

12. A switch mechanism according to claim 11 wherein a motion imparting device is provided, the same having frictional engagement with the second portion of the U-shaped member and adapted for motion about the axis thereof, said device having a lever portion for application thereto of pressure for tilting said member and engaging said contactor with said contact.

13. A switch mechanism according to claim 11 wherein

the extension of said coil spring is freely hooked under the contactor between the first and second portions of said U-shaped member.

14. A switch mechanism according to claim 11 wherein the contactor extends from said stop to a point adjacent to said coil spring at which point it is formed at an angle to the axis of said contactor and pivoted at a location removed from said axis.

References Cited in the file of this patent

UNITED STATES PATENTS

1,444,557	Sachs	Feb. 6, 1923
1,796,612	Nagl	Mar. 11, 1931
2,089,081	Wemple	Aug. 3, 1937
2,666,822	Pelletier et al.	Jan. 19, 1954