(12) INTERNATIONAL APPLICATION PUBLISHED UNDER THE PATENT COOPERATION TREATY (PCT)

(19) World Intellectual Property Organization
International Bureau

(43) International Publication Date
18 December 2014 (18.12.2014)

WIPO | PCT

(10) International Publication Number
WO 2014/201036 A1

(51) International Patent Classification:
G03B 9/02 (2006.01) *G01J 5/08* (2006.01)

(21) International Application Number:
PCT/US2014/041769

(22) International Filing Date:
10 June 2014 (10.06.2014)

(25) Filing Language: English

(26) Publication Language: English

(30) Priority Data:

61/833,599	11 June 2013 (11.06.2013)	US
61/833,587	11 June 2013 (11.06.2013)	US
61/833,592	11 June 2013 (11.06.2013)	US
14/088,176	22 November 2013 (22.11.2013)	US
14/170,348	31 January 2014 (31.01.2014)	US

(71) Applicant: **RAYTHEON COMPANY** [US/US]; 870 Winter Street, Waltham, Massachusetts 02451-1449 (US).

(72) Inventors: **YANEVICH, Jeffrey P.**; 22509 75th Ave. E., Bradenton, Florida 34211-7177 (US). **BREST, Michael L.**; 7364 Belluno Drive, Goleta, California 93117-1220 (US). **MCALLISTER, Kenneth L.**; 401 Carlo Drive, Goleta, California 93117-1751 (US). **SCROGGIN, James E.**; 4577 County Road 862, McKinney, Texas 75071-7355 (US). **TRACY, Gregory D.**; 334 West Mason Street, Santa Barbara, California 93101 (US). **DOMINGUEZ, Julio C.**; 914 East McCloud, Santa Maria, California 93455 (US).

(74) Agents: **MUNCK, William A.** et al.; Munck Wilson Mandala, LLP, 600 Banner Place Tower, 12770 Coit Road, Dallas, Texas 75251 (US).

(81) Designated States *(unless otherwise indicated, for every kind of national protection available)*: AE, AG, AL, AM, AO, AT, AU, AZ, BA, BB, BG, BH, BN, BR, BW, BY, BZ, CA, CH, CL, CN, CO, CR, CU, CZ, DE, DK, DM, DO, DZ, EC, EE, EG, ES, FI, GB, GD, GE, GH, GM, GT, HN, HR, HU, ID, IL, IN, IR, IS, JP, KE, KG, KN, KP, KR, KZ, LA, LC, LK, LR, LS, LT, LU, LY, MA, MD, ME, MG, MK, MN, MW, MX, MY, MZ, NA, NG, NI, NO, NZ, OM, PA, PE, PG, PH, PL, PT, QA, RO, RS, RU, RW, SA, SC, SD, SE, SG, SK, SL, SM, ST, SV, SY, TH, TJ, TM,

[Continued on next page]

(54) Title: THERMAL CONTROL IN VARIABLE APERTURE MECHANISM FOR CRYOGENIC ENVIRONMENT

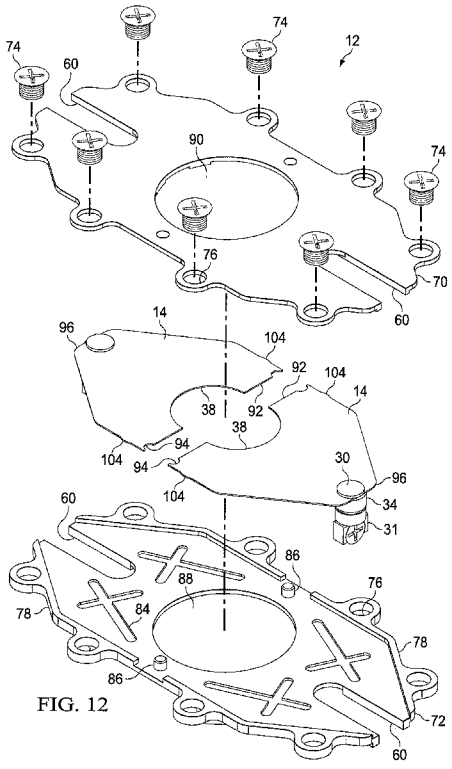

FIG. 12

(57) Abstract: A shutter assembly (12) comprising a first planar member (70) and a second planar member (72) opposed from one another and forming a sleeve having a cavity (80) therebetween, the sleeve having a pair of side rails (78) adjacent the cavity along sides of the sleeve. A first shutter member (14) having a first end (92) is disposed in the cavity and slidingly disposed along one of the side rails, and a second shutter member (14) having a second end (92) is disposed in the cavity and slidingly disposed along the other side rail. The first end is opposed to the second end and is configured to be selectively advanced towards, and retracted from, the second end so as to define an aperture (15) therebetween having a first shape when disposed in a first position, and wherein the aperture has a second larger shape when the first end is disposed in a second position. The first shutter member and the second shutter member maintain a thermal contact with the side rails and the planar members in all positions. The shutter assembly is well suited to be used at a cryogenic temperature and in a high vacuum environment.

WO 2014/201036 A1

TN, TR, TT, TZ, UA, UG, US, UZ, VC, VN, ZA, ZM, ZW.

(84) **Designated States** *(unless otherwise indicated, for every kind of regional protection available)*: ARIPO (BW, GH, GM, KE, LR, LS, MW, MZ, NA, RW, SD, SL, SZ, TZ, UG, ZM, ZW), Eurasian (AM, AZ, BY, KG, KZ, RU, TJ, TM), European (AL, AT, BE, BG, CH, CY, CZ, DE, DK, EE, ES, FI, FR, GB, GR, HR, HU, IE, IS, IT, LT, LU, LV, MC, MK, MT, NL, NO, PL, PT, RO, RS, SE, SI, SK, SM, TR), OAPI (BF, BJ, CF, CG, CI, CM, GA, GN, GQ, GW, KM, ML, MR, NE, SN, TD, TG).

Published:

— *with international search report (Art. 21(3))*

— *before the expiration of the time limit for amending the claims and to be republished in the event of receipt of amendments (Rule 48.2(h))*

THERMAL CONTROL IN VARIABLE APERTURE MECHANISM FOR CRYOGENIC ENVIRONMENT

TECHNICAL FIELD

[0001] The present disclosure is generally directed to shutters of imaging devices, and more specifically to an infrared (IR) imaging shutter having a variable aperture and operable at cryogenic temperatures in a high-vacuum environment that is highly sensitive to temperature variations.

BACKGROUND OF THE DISCLOSURE

[0002] Imaging devices configured to operate at cryogenic temperatures in a high-vacuum environment are highly sensitive to temperature variations. Some imaging devices have variably positioned shutters configured to establish different sized apertures, whereby the shutter is mechanically configured to have two or more apertures to support different fields of view and wavelengths. During the mechanical configuration, the shutter increases in temperature due to friction and heat transferred from a drive mechanism. In order for a high definition IR sensor to work correctly, the temperature of the shutter cannot rise more than 10 Kelvin during actuation. Failure to provide shutter thermal stability degrades the imaging performance. For instance, when the temperature of the shutter rises more than 10K, the wait period before the imaging device can be effectively used increases as the shutter temperature variation increases. It is not uncommon for prior art imaging devices to have a wait period that exceeds 10 minutes after shutter configuration.

[0003] Prior art devices having an interleaved iris design have multiple blades, such as four blades, that are forced together to transfer heat. These interleaved blades are typically ceramic coated, and thus are poor thermal conductors. As a result, the shutter experiences a large change in temperature during each change in position, and significant wait times are incurred while the shutter temperature stabilizes.

[0004] There is desired a shutter having a thermally stable variable aperture that provides continuous stable cryogenic temperature performance both at rest and while transitioning between aperture opening settings and is operable in a high vacuum environment. The aperture should maintain at least a 200K temperature differential from the "warm" parts including the drive mechanism, and not vary more than 10K during a transition.

SUMMARY OF THE DISCLOSURE

[0005] To address one or more of the above-deficiencies of the prior art, one embodiment described in this disclosure comprises a shutter assembly suitable for an imaging device, such as but not limited to, an IR imaging device.

[0006] The shutter assembly comprises a first planar member and a second planar member opposed from one another and forming a sleeve having a cavity therebetween, the sleeve having at least one side rail adjacent the cavity. A first shutter member having a first end is disposed in the cavity and slidingly disposed along the at least one side rail, and a second shutter member having a second end is disposed in the cavity and slidingly disposed along the at least one side rail. The first end is opposed to the second end and is configured to be selectively advanced towards, and retracted from, the second end so as to define an aperture therebetween having a first shape when disposed in a first position, and wherein the aperture has a second larger shape when the first end is disposed in a second position. The first shutter member and the second shutter member maintain a thermal contact with the side rails and the planar members in all positions. The shutter assembly is well suited to be used at a cryogenic temperature and in a high vacuum environment.

[0007] The first and second shutter member's first and second ends, respectively, have a heat reflective surface. The first end and the second end each have a recess configured to oppose each other and together define the aperture. Each recess may comprise a semicircular recess to define a round aperture or other shape. The first and second shutter members each have a respective positioning member configured to selectively position the respective shutter member along the side rails of the sleeve. At least one drive member may be configured to position the first shutter member and the second shutter member, wherein the positioning members are thermally isolated from the at least one drive member except when the at least one drive member positions the respective shutter member. The at least one drive member may comprise a pair of drive members each having a recess configured to selectively engage the respective positioning member to position the respective shutter member only during the positioning of the respective shutter member. The positioning members are coupled to the respective shutter members at ends thereof that are opposite the respective first end and second end. A stop member is mechanically and thermally coupled between the first planar member and the second planar member, and is configured to limit a travel of the first shutter member first end with respect to the second shutter member second end. The first shutter member and the second shutter member are configured to not change temperature more than

10 Kelvin when positioned between defining the aperture having the first shape and the second shape. The first shutter member and the second shutter member are thermally isolated from the at least one drive member and configured to maintain at least a 200 Kelvin temperature differential from the at least one drive member when the first and second shutter members are at a cryogenic temperature.

[0008] Although specific advantages have been enumerated above, various embodiments may include some, none, or all of the enumerated advantages. Additionally, other technical advantages may become readily apparent to one of ordinary skill in the art after review of the following figures and description.

BRIEF DESCRIPTION OF THE DRAWINGS

[0009] For a more complete understanding of the present disclosure and its advantages, reference is now made to the following description taken in conjunction with the accompanying drawings, in which like reference numerals represent like parts:

[0010] FIGURE 1 illustrates a thermal imaging device including a shutter and a thermally isolated drive system configured to position the shutter according to an embodiment of the present disclosure;

[0011] FIGURE 2 illustrates the thermally isolated drive system of FIGURE 1 with the shutter removed;

[0012] FIGURE 3 illustrates a perspective view of one drive mechanism;

[0013] FIGURE 4 illustrates an exploded view of part of the drive system illustrating the drive arm having an elongated recess configured as an opening to receive a drive pin and roller of the shutter slider member;

[0014] FIGURE 5 illustrates the drive arm in a first "full open" position wherein the shutter slider member is in a corresponding first position;

[0015] FIGURE 6 illustrates the drive arm in a second "full closed" position wherein the shutter slider member is in a corresponding second position;

[0016] FIGURE 7 illustrates a top view of the arm and elongated opening receiving, but physically and thermally separated from, the slider pin and roller in the first and second position;

[0017] FIGURE 8 illustrates a top view of the arm in the first position showing the asymmetric clearance of the arm from the slider pin and roller, including the radial play of the actuator compared to this clearance;

[0018] FIGURE 9 illustrates a perspective view of the drive crank including the arms;

[0019] FIGURE 10 illustrates a controller circuit configured to control the drive assembly;

[0020] FIGURE 11 illustrates a top perspective view of the shutter assembly;

[0021] FIGURE 12 illustrates an exploded view of the shutter assembly;

[0022] FIGURE 13A-13D illustrate different view of the shutter assembly;

[0023] FIGURE 14A-14B illustrate top and bottom views of the lower plate of the shutter assembly;

[0024] FIGURE 15A illustrates a perspective view of the top plate flipped to show the lower surface thereof; and

[0025] FIGURE 15B illustrates a view of the top plate lower surface.

DETAILED DESCRIPTION

[0026] It should be understood at the outset that, although example embodiments are illustrated below, the present invention may be implemented using any number of techniques, whether currently known or not. The present invention should in no way be limited to the example implementations, drawings, and techniques illustrated below. Additionally, the drawings are not necessarily drawn to scale.

[0027] FIGURE 1 illustrates a top perspective view of an IR thermal imaging shutter apparatus 10 including a variable aperture mechanism (VAM) operable at ultra-high vacuum and cryogenic temperature. Apparatus 10 includes a shutter assembly generally shown at 12 comprising a pair of sliding aperture blades 14. The sliding aperture blades 14 together define a shutter aperture 15, and each blade 14 is configured to be driven by a respective drive mechanism generally shown at 16A and 16B to selectively establish the shape of the aperture 15. The aperture blades 14 are each enclosed in a cavity defined between a pair of thermally conductive members defining a sleeve, each aperture blade 14 having two positions, a closed position to define the aperture 15 having a smaller shape as shown in Figure 1, and a retracted position to define a larger shape aperture 15 (not shown) such that the aperture 15 is configured to work with an imaging device (not shown) having at least two different fields of view as will be described in more detail shortly with respect to FIGURE 4 and FIGURES 11-15. The shutter assembly 12 is advantageously configured to operate at a cryogenic temperature in a high-vacuum environment, whereby the blades 14 maintain a thermally stable temperature both at rest and during a transition between positions, and which blades 14 are thermally isolated from the non-cooled apparatus 10 elements, such as the drive mechanism 16A and 16B, and the ambient which is critical such that the imaging device can be immediately used after aperture shape and diameter changes without a significant wait time, as will be described shortly in respect to FIGURE 4 and FIGURES 11-15.

[0028] Each drive mechanism 16A and 16B comprises a rotary motor 18 (see FIGURE 3) having a rotatable actuator pin 20 coupled to and driving a balanced rotatable drive crank 22. Each drive crank 22 has a radially extending elongated arm 24 (see FIGURE 2), configured to selectively rotate arm 24 between a first “full open” position and a second “full closed” position as shown in FIGURE 5 and FIGURE 6, as will be discussed shortly. Each arm 24 has a distal end having a recess 26, as shown in FIGURE 2, the recess 26 preferably comprising an elongated opening in one preferred embodiment as shown. The recess 26 could also comprise a slot or other open ended structure if desired, and limitation to

an opening is not to be inferred.

[0029] Each arm recess 26 is configured to receive, but is spaced from, a respective positioning member 30 and roller 34 (see FIGURE 4) rotatably disposed thereabout. Each member 30 preferably comprises a shutter pin secured to, and thermally coupled with, one respective end of the aperture blade 14 formed as a triangle and opposite the blade end defining the aperture 15 as shown in FIGURE 4. This triangular shape of the aperture blade proximate the respective member 30, and the separation of each member 30 from the opposing blade end, helps isolate any heat created on member 30 during aperture positioning from the blade aperture ends proximate the imaging device to reduce imaging degradation due to such heat. Each member 30 extends downwards and is connected to a magnet 31 that remains physically and thermally separated above a respective magnetic detent latch 32. Each detent latch 32 is securingly and slidably received in a respective slot 35 (see FIGURE 3) defined in a frame 36. Each detent latch 32 is preferably comprised of a plug configured to slide linearly inside the corresponding slot 35 in frame 36, and locked into position when positioned in the final desired location by a set screw 37 pressing the plug upwards into slot 35, providing an accessible locking feature while inducing minimal additional linear motion. Upon rotation of the arms 24, the respective openings 26 engage the respective roller 34 encompassing the respective shutter pin 30 to linearly move the aperture blade 14 between a first full open position and a second full closed position, wherein the roller 34 rotates in the opening 26 during transition, and is then spaced therefrom at the end of the transition.

[0030] FIGURE 2 depicts the apparatus 10 with the shutter apparatus 12 removed, illustrating the drive mechanisms 16A and 16B including the respective arms 24 having openings 26, the magnetic detent latches 32 without shutter pins 30, as well as two pairs of proximity sensors 40 (see FIGURE 3) to indicate the final position of each respective arm 24, preferably comprised of Hall effect sensors. Each drive crank 22 has a proximity indicating arm 42 including a magnet 44 disposed at a distal end therein and selectively extending over one of the proximity sensors 40 as a function of the arm 24 position. When the arm 24 is in the first full open position as shown in FIGURE 5, the first proximity sensor 40 indicates the drive crank 22 is in place at the open position, and when the arm 24 is in the second full closed position as shown in FIGURE 6, the second proximity sensor 40 indicates the drive crank 22 is in place at the closed position. Magnetic cogging, created internally to the actuator 18 and in the detent magnetic latch 32, forces the arms 42 and 46 against the set screws 54 in stops 50 and 52 and prevents any play at the end of travel.

[0031] FIGURE 3 depicts a perspective view of one drive mechanism 16 with arm 24 positioned in the second position, illustrating the travel path of the arm, which may be, for instance, 24 degrees, although limitation to this path is not to be inferred. The detent magnetic latch 32 is comprised of a non-magnetic metal, such as stainless steel, and is seen to have a recess 55 and a pair of end stops 56, with one end stop 56 defined on each end of the recess 55. A magnet 57 is attached to, or embedded in, the opposing faces of end stops 56. The magnets 57 are each configured to magnetically pull the respective magnet 31, and thus pin 30 and associated roller 34 (FIGURE 4), when the magnet 31 is advanced by arm 24 proximate thereto. When arm 24 advances from the first position (FIGURE 5) to the second position (FIGURE 6), stop 50 prevents further movement of the arm 24 but the momentum of the pin 30, magnet 31, roller 34 and the associated shutter blade 14 are allowed to continue moving until the blade 14 fully closes and engages a pair of stop members 86 of shutter assembly 12, as shown in Figure 14A and will be described in more detail shortly. The magnet 31, however, will not make physical contact with the respective magnet 57 and will remain closely proximate and magnetically attracted to magnet 31 to provide a magnetic latch. Basically, the arm 24 undershoots, and the pin 30, magnet 31 and roller 34 advance to separate from the opening 26 and remain thermally isolated from the arm 24, and the stop members 86 limit the travel of pin 30 from overshooting and engaging the other edge of opening 26. Likewise, when the arm 24 advances from the second position to the first position, stop 52 prevents further movement of the arm 24 but the momentum of pin 30, magnet 31, roller 34 and the associated blade 14 are allowed to continue moving until the blade 14 fully opens and engages a pair of sidewalls 78, as shown in Figure 14A. The magnet 31, however, will not make physical contact with the respective magnet 57 and will remain closely proximate and magnetically attracted to magnet 31 to provide a magnetic latch.

[0032] FIGURE 4 depicts an exploded view of one drive mechanism 16 and one end of one shutter blade 14 configured to be positioned as a function of the drive mechanism positions. Each shutter blade 14 is very thin and lightweight to help reduce friction. The shutter pin 30 consists of a cylindrical post which captures roller 34 comprising a bushing to prevent sliding along the distal slot 26, wherein roller 34 rolls against the edges of slot 26 to prevent friction and wear. The magnet 31 is provided below shutter pin 30 and provides a magnetic detent pulling when in close proximity to, but not contacting and thermally isolated from, the arms of the detent magnetic latch 32. Each shutter blade 14 has a semicircular notch 38 configured to define the smaller diameter of aperture 15 in the closed position. Each

notch 38 may be configured to define a round aperture as shown, but may also have different shapes to define different aperture shapes, such as hexagon, rectangular, elliptical and other shapes.

[0033] Each drive crank 22 further comprises a radially extending arm 46, wherein each of arms 42 and 46 are shorter than the elongated arm 24 as shown in FIGURE 5 and 6, as well as FIGURE 9. Each of arms 24, 42, and 46 are balanced about the center of the drive crank 22, such that the center of gravity of drive crank 22 is balanced when coupled to the respective actuator pin 20. This makes system 10 far less sensitive to extremely high shock requirements. Each arm 42 and 46 has a travel stop limit comprising a stop member 50 and 52, respectively, of which each contains an adjustable travel limit set screw 54. Stop member limit screws 54 in turn establish the precise travel path and limit of arm 24, and thus the precise limit position of the driven shutter plate 14. Again, proximity sensors 40 sensing arm 42 indicate whether the drive crank 22, and thus the arm 24 and shutter plate 14, is in one of two positions.

[0034] When the shutter plate 14 is in the full open position, the arm 24 of drive mechanism 16A is in the full open position and the shutter pin 30 of drive mechanism 16A is positioned at a distal end of a slot 60 defined in one end of plate 12 as shown in FIGURE 5. Correspondingly, the arm 24 of drive mechanism 16B is in the full open position, and the shutter pin 30 of the drive mechanism 16B is outwardly advanced in an opposing slot 60 defined at the opposing end of plate 12. The converse is true when the shutter plates 14 are in the closed position, as can be seen in FIGURE 1 and FIGURE 6.

[0035] Advantageously, as illustrated in FIGURE 7 and FIGURE 8, each shutter pin 30 and the corresponding roller 34 remain physically and thermally separated from the respective arm 24 when in the first position and the second position due to a spacing created there between in both positions, thus creating a thermal barrier, also referred to as thermal isolation. The arm 24 only engages the rollers 34 disposed about the shutter pin 30 for a very short time period during movement/actuation of the shutter plate 14 from one position to the other. Thus, the drive mechanisms 16A and 16B and all parts thereof are thermally isolated from the driven shutter plate 14 when in the operable full open or full closed position. The shutter mechanism including the plate 12 and shutter plate 14 are preferably configured in a vacuum having a true IR Dewar cryogenic environment.

[0036] Moreover, the spacing of the arms 24 from rollers 34 provides the motors 18, and thus the respective arms 24, time to accelerate from the respective first rest position or

second rest position which advantageously builds momentum in the arms 24 before engaging and driving the respective rollers 34, converting the actuation mechanism from torque transfer to momentum transfer of energy. This additional momentum helps overcome the magnetic detent forces of the magnetic detent latch 32 acting against the shutter pin 30, holding arms 42 or 46 against the stop posts 50 or 52. The impact of the arm 24 engaging the roller 34 during rotation also helps overcome any stiction that may be present. This spacing increases the required force margin from 25% to 900%. The spacing also allows the use of a less precise solenoid motor 18, which has a relatively large amount of play and thus is less suitable for driving the arm 24 directly. Each arm opening 26 provides a loose fitting about the respective shutter pin 30 and roller 34, such that the motor loose play does not impair operation of the shutter aperture. Conversely, the loose tolerances of the arm openings 26 mitigate the risk of an inadvertent rebound. The aperture blades 14 have internal stops, which engage prior to the holding arms 42 or 46 contacting their respective stop. Since the shutter pin 30 is not firmly engaged within the distal slot 26, the aperture blade can rebound before the arm 42 or 46 contacts the stop set screw 54 and rebounds. Additional margin is provided by the fact that the arm has much higher inertia than the aperture blade, and rebounds correspondingly slower. The high level of damping in the actuator bearings in 18 (FIG.3) diminishes the magnitude of the arm rebound. These features prevent a situation where the rebounding arm 24 impacts the shutter pin 30 and roller 34 while traveling in the opposite direction. Such impact could exert extremely high forces onto the shutter pin 30 due to the arm's much higher inertia.

[0037] As shown in FIGURE 8, the clearance between the respective roller 34 and arm opening 26 is slightly asymmetric, although it may be symmetric if desired. In one preferred implementation, there is about 1.4 degrees of clearance, also referred to as a dead zone, equating to about a .011 inch clearance, although limitation to this angular spacing or clearance is not to be inferred. The arm travel limit set stops established by screws 54 are preferably set to detent to within 1/5 of the dead zone, about .28 degrees.

[0038] In one preferred embodiment, a rotary solenoid is used as motor 18 as it provides consistent reliability and an adjustable stroke, such as manufactured by Brandstrom Instruments of Ridgefield Connecticut. The fine adjustment features of the drive crank 22 using the travel limit screws 54 in the stationary motor mount stop limit members 50 and 52 help establish this stroke. This design is superior to a piezo drive motor that is inherently unreliable, although is functionally acceptable. Alternate rotary motors could comprise DC

stepper motors, and limitation to the particular rotary motor is not to be inferred. This invention has advantages over motors and linkages that may allow motor over-travel which may overstress driven parts.

[0039] FIGURE 9 illustrates a perspective view of the drive crank 22, including the four balanced arms.

[0040] FIGURE 10 illustrates a control circuit at 60 that is configured to selectively drive each of motors 18, to control the positioning of the arms 24 and thus drive the shutter plate 14 between the first and second positions. The control circuit includes a controller 62 having a processor configured to control drive electronics 64 that interface with motors 18 of drive mechanisms 16A and 16B.

[0041] Referring now to FIGURE 11, there is shown a top perspective view of the shutter assembly 12. FIGURE 12 shows an exploded view of the shutter assembly 12. FIGURE 13A shows a top view of shutter assembly 12, FIGURE 13B shows a bottom view of shutter assembly 12, FIGURE 13C shows a side view of shutter assembly 12, and FIGURE 13D shows an end view of shutter assembly 12. Shutter assembly 12 comprises a top plate 70 and a bottom plate 72 parallel to each other and secured by a plurality of fasteners 74, shown as screws, extending through respective flange openings 76. The bottom plate 72 has four upwardly extending sidewalls 78 about the perimeter thereof such that top plate 70 and bottom plate 72 together define a sleeve having a cavity 80 there between. Cavity 80 is configured to house the shutter blades 14 and enable sliding of the blades 14 between two positions to define two different diameters of aperture 15. Each of top plate 70 and bottom plate 72 have opposing slots 60 as previously described to enable shutter pins 30 to be selectively positioned therein and establish the aperture 15 setting. Top plate 70 and bottom plate 72 are comprised of thermally conductive materials, such as beryllium copper, and are configured such that any generated heat uniformly transfers therethrough and equalizes around the shutter assembly 12 as it is maintained at a cryogenic temperature. For instance, any heat generated in the shutter pin 30 or roller 34 during positioning of blades 14 to change aperture 15 settings quickly spreads to the other members to maintain a stable temperature, which is critical to allow the high definition infrared (IR) sensor (not shown) operating with the aperture 15 to be used promptly after setting.

[0042] Each of the shutter blades 14 are comprised of a very thin metal material, such as beryllium copper, and in addition, are gold plated. Advantageously, the gold plating provides self-lubrication to the blades 14 without using an oil or grease that is not suitable for

use at cryogenic temperatures. The gold plating also reflects heat such as that generated by the imaging system at aperture 15. The gold plating also prevents foreign object debris (FOD) as it is very soft.

[0043] Each blade 14 has a rounded extension or nub 104 on an edge thereof configured to engage the respective sidewall 78 of bottom plate 72, wherein the nubs 104 provide the only contact points with sidewall 78 to reduce friction during positioning, but also advantageously provide a thermal path. The sliding blades 14 maintain thermal conduction with upper member 70 and lower member 72 at all times including during a transition due to the multi-point high thermal conductive paths. Again, the gold plating of blade 14 provides lubrication at these contact points. All materials of shutter assembly 12 are vacuum stable in an enclosed environment.

[0044] FIGURE 14A illustrates a top perspective view of bottom plate 72 and FIGURE 14B illustrates a bottom perspective view of bottom plate 72. A top surface 82 of bottom plate 72 is seen to comprise a plurality of X-shaped recesses 84 configured to operate as particle traps. Each recess 84 is formed during molding or by etching, and is configured to collect and capture particles that may be generated as the blades 14 are positioned over time. In addition, the magnets 31 coupled to shutter pins 30 magnetize the shutter pins 30 and also collect any particles that may be generated.

[0045] Bottom plate 72 is further seen to comprise a pair of posts 86 opposed each side of opening 88, which opening 88 provides the larger shape of aperture 15 when the blades 14 are in the retracted position. Top plate 70 has opening 90 having a larger diameter (clearance hole) while opening 88 has a controlled aperture hole. Each of blades 14 is seen to have opposing distal ends 92 forming edges including opposing notches 94, as shown in FIGURE 12. The opposing notches 94 of blades 14 are configured to mechanically and thermally engage the respective posts 86 in the closed position, which posts 86 operate as stop limits for the blades 14, and also shutter pin 30 and roller 34 as described earlier with respect to FIGURE 3. Moreover, the posts 86 help thermally balance the shutter assembly 12 when the blades 14 engage them, and also help balance any heat between the opposing top plate 70 and the bottom plate 72. The sidewalls 78 provide the stop limits for the blades 14 in the open position, and also shutter pin 30 and roller 34 as described earlier with respect to FIGURE 3.

[0046] Each blade 14 has a tapered, triangular end 96 mechanically and thermally coupled to respective shutter pin 30 such that any heat generated in shutter pin 30 is as far as

possible from the opposing distal ends 92 to minimize thermal variations at distal ends 92 that can degrade the performance of the imaging system. The distal ends 92 are each beveled, and slightly overlap one other in the closed position to prevent any light passing across the interface of the blades 14 in the closed position. The beveled distal ends 92 also allow one blade distal end to slightly ride on the other in the closed position, which may occur over time during operation of the shutter assembly 12.

[0047] The bottom plate 72 has a plurality of semicircular extensions 98 that are configured to receive a cryogenic housing configured to maintain the shutter assembly 12 at a cryogenic temperature, as shown in FIGURE 14B.

[0048] Referring to FIGURE 15A there is shown a perspective view of the top plate 70 with the top plate 70 turned over to show a lower surface 100 of the top plate 70. FIGURE 15B shows a top view of the flipped top plate 70. The lower surface 100 is seen to have a pair of parallel slide rails 102 each side of opening 88, each rail 102 extending upward and configured to engage the top surface of the opposing gold plated blades 14. The slide rails 102 also partially straddle the respective opening 60. Advantageously, the gold plating is relatively soft and provides a self-lubricating surface, such that very low friction is generated between the rails 102 and the surface of the blades 14 during transitions. Moreover, the soft gold material does not generate any noticeable gold particulates.

[0049] The shutter assembly is configured to operate at cryogenic temperatures, below 100 Kelvin. The shutter assembly 12 maintains at least a 200 Kelvin temperature differential from the non-cooled parts including the driving mechanism parts. Advantageously, the shutter assembly 12 is configured such that the blades 14 are thermally stable and do not change temperature more than 10 Kelvin, particularly at edges 92, which is critical such that a high definition infrared (IR) imaging system can be used immediately after transitions of the blades 14 from one aperture setting to the other. The sliding blades 14 maintain continuous thermal contact without increased friction. This exceptional performance is achieved by numerous critical features including the gold plating of the blades providing a self-lubricating low friction surface at cryogenic temperatures, the pins 30 coupled to a triangular tapered end of the blades 14 at the far ends of the blades from the aperture, the thermal isolation of the driving mechanism from the shutter assembly 12 achieved by the separation of pin 30 and roller 34 from the shutter assembly 12 except during transition, and the thin blades 14 minimizing friction and reflecting any heat.

[0050] Modifications, additions, or omissions may be made to the systems,

apparatuses, and methods described herein without departing from the scope of the invention. The components of the systems and apparatuses may be integrated or separated. Moreover, the operations of the systems and apparatuses may be performed by more, fewer, or other components. The methods may include more, fewer, or other steps. Additionally, steps may be performed in any suitable order. As used in this document, "each" refers to each member of a set or each member of a subset of a set.

[0051] To aid the Patent Office, and any readers of any patent issued on this application in interpreting the claims appended hereto, applicants wish to note that they do not intend any of the appended claims or claim elements to invoke paragraph 6 of 35 U.S.C. Section 112 as it exists on the date of filing hereof unless the words "means for" or "step for" are explicitly used in the particular claim.

WHAT IS CLAIMED:

1. A shutter for an imaging device, comprising:

a first planar member and a second planar member opposed from one another and forming a sleeve having a cavity therebetween, the sleeve having at least one side rail adjacent the cavity; and

a first shutter member having a first end disposed in the cavity and slidingly disposed along the at least one side rail, and a second shutter member having a second end disposed in the cavity and slidingly disposed along the at least one side rail, the first end opposed to the second end and configured to be selectively advanced towards, and retracted from, the second end so as to define an aperture therebetween having a first shape when disposed in a first position, and wherein the aperture has a second shape when the first end is disposed in a second position, wherein the first shutter member and the second shutter member maintain a thermal contact with the side rails in all positions.

2. The shutter as specified in Claim 1 wherein the first end and the second end each have a heat reflective surface.

3. The shutter as specified in Claim 1 wherein the first end and the second end each have a recess configured to oppose each other and together define the aperture.

4. The shutter as specified in Claim 3 wherein each said recess comprises a semicircular recess.

5. The shutter as specified in Claim 1 wherein the first and second shutter members and the sleeve are configured to operate at a cryogenic temperature.

6. The shutter as specified in Claim 1 further comprising at least one positioning member configured to selectively position the first shutter member and the second shutter member within the sleeve.

7. The shutter as specified in Claim 6 further comprising at least one drive member configured to drive the at least one positioning member, wherein the at least one positioning member is thermally isolated from the first shutter member and the second shutter member except when the at least one drive member positions the first shutter member and the second shutter member.

8. The shutter as specified in Claim 7 wherein the at least one drive member comprises a pair of drive members each having a recess configured to selectively engage the at least one positioning member to position the respective shutter member only during the positioning of the respective shutter member.

9. The shutter as specified in Claim 8 wherein the positioning members are coupled to the respective shutter members at ends thereof that are opposite the respective first end and second end.

10. The shutter as specified in Claim 1 further comprising a stop member thermally coupled between the first planar member and the second planar member, and configured to limit a travel of the first shutter member first end with respect to the second shutter member second end.

11. The shutter as specified in Claim 1 wherein the first shutter member and the second shutter member are configured to not change temperature more than 10 Kelvin when positioned between defining the aperture having the first shape and the second shape.

12. The shutter as specified in Claim 7 wherein the first shutter member and the second shutter member are configured to maintain at least a 200 Kelvin temperature differential from the at least one drive member when the first shutter member and the second shutter member are at a cryogenic temperature.

13. A shutter for an imaging device, comprising:

a first planar member and a second planar member opposed from one another and forming a sleeve having a cavity therebetween, the sleeve having a pair of side rails adjacent the cavity;

a first shutter member having a first end disposed in the cavity and slidingly disposed along at least one of the side rails, and a second shutter member having a second end disposed in the cavity and slidingly disposed along at least one of the side rails, the first end opposed to the second end, wherein the first shutter member and the second shutter member are each configured to be selectively advanced towards, and retracted from, each other so as to define an aperture therebetween having a first shape when disposed in a first position, and wherein the aperture has a second shape when the first end is disposed in a second position, wherein the first shutter member and the second shutter member maintain a thermal contact with the respective side rail in all positions.

14. The shutter as specified in Claim 13 wherein the first end and the second end each have a semicircular recess configured to oppose each other and together define a round said aperture.

15. The shutter as specified in Claim 13 further comprising a pair of positioning members, each positioning member configured to selectively position the respective shutter member in the sleeve.

16. The shutter as specified in Claim 15 further comprising a first drive member configured to selectively engage the first shutter member positioning member to selectively position the first shutter member, and a second drive member configured to selectively engage the second shutter member positioning member to selectively position the second shutter member, wherein the positioning members are thermally isolated from the respective first shutter member and the second shutter member except when the drive members position the respective shutter member.

17. The shutter as specified in Claim 16 wherein first drive member and the second drive member each comprise an arm having a recess configured to selectively engage the respective positioning member.

18. The shutter as specified in Claim 17 wherein the arm recesses each comprise an opening encompassing the respective positioning member.

19. The shutter as specified in Claim 17 further comprising at least one bi-stable solenoid motor configured to selectively position the drive member arms.

20. The shutter as specified in Claim 15 wherein the first shutter member positioning member is disposed at an end of the first shutter member opposite the first end.

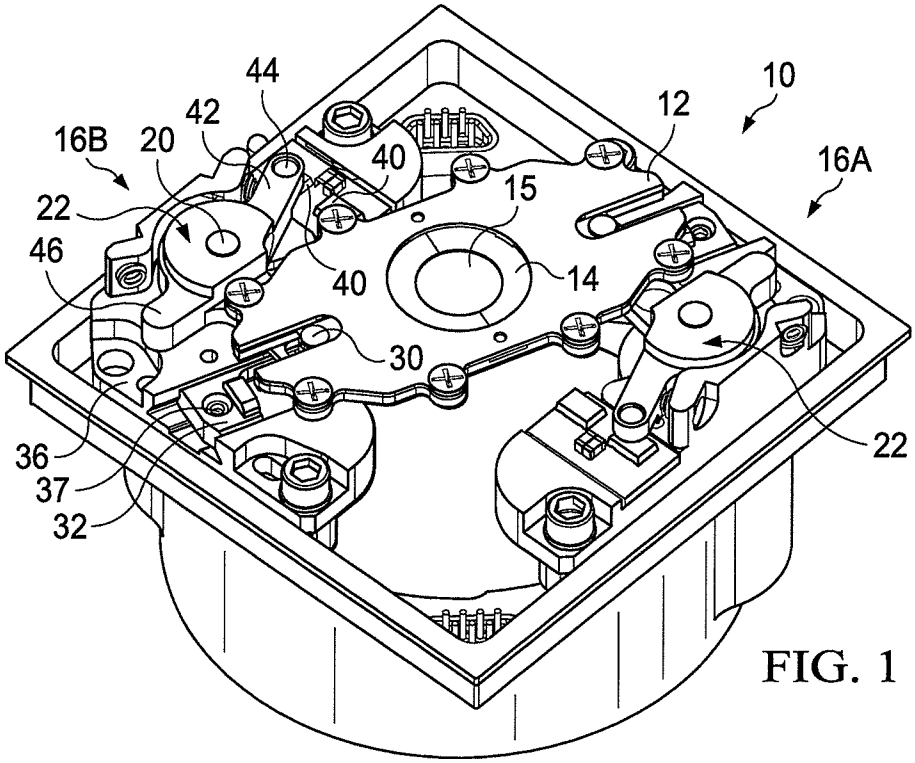
44
42
16B
20
40
10
12
16A
22
15
46
40
14
30
22
36
37
32

FIG. 1

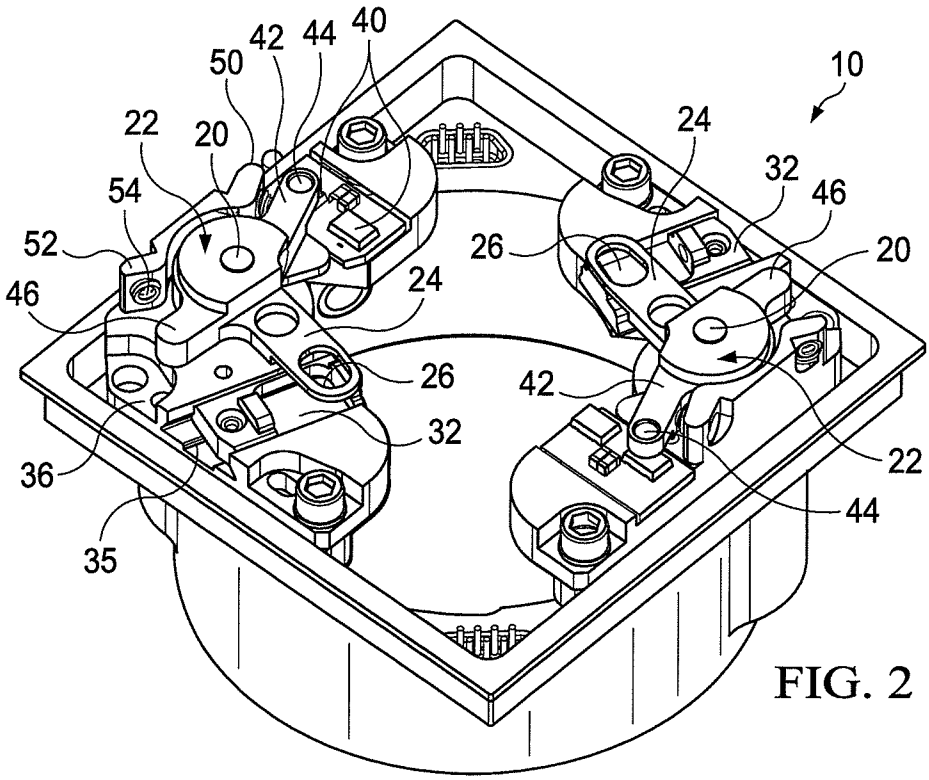
42
44
40
50
10
22
20
24
54
32
46
52
26
20
46
24
26
42
32
22
36
44
35

FIG. 2

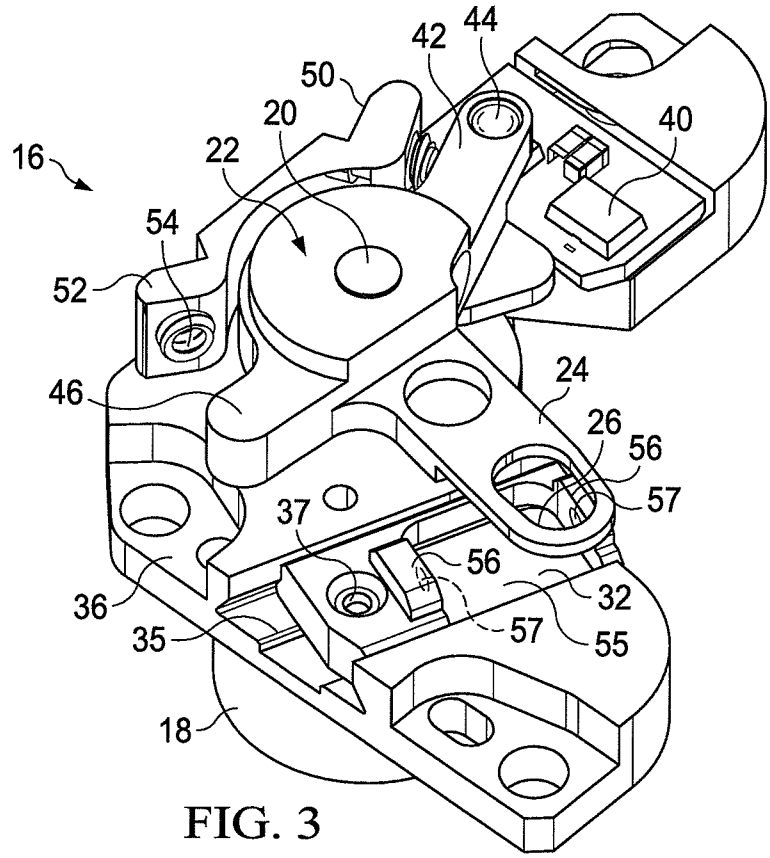
16
22
20
50
42
44
40
54
52
46
24
26
56
57
37
56
32
36
35
57
55
18

FIG. 3

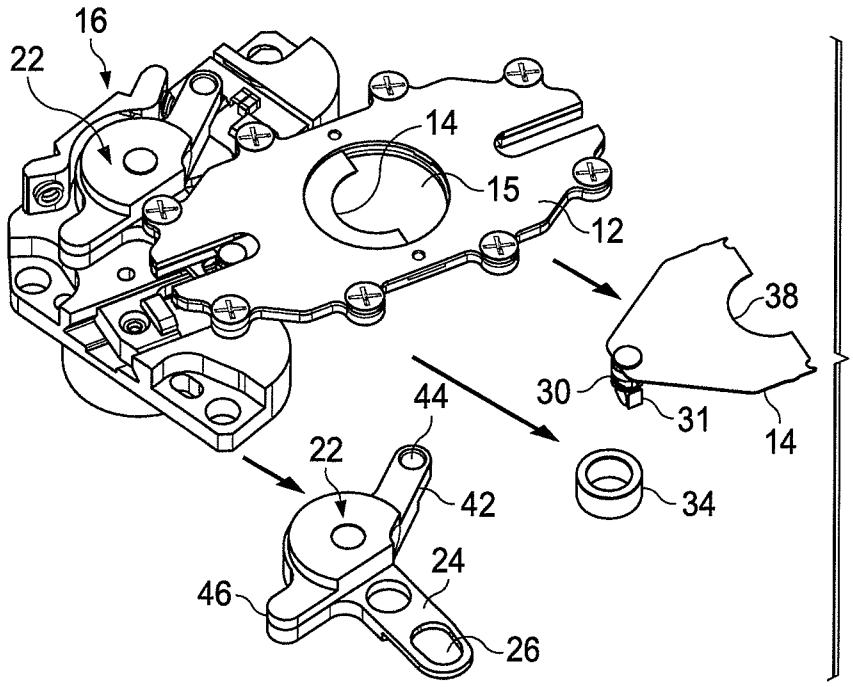
16
22
14
15
12
38
30
31
14
44
22
42
34
24
46
26

FIG. 4

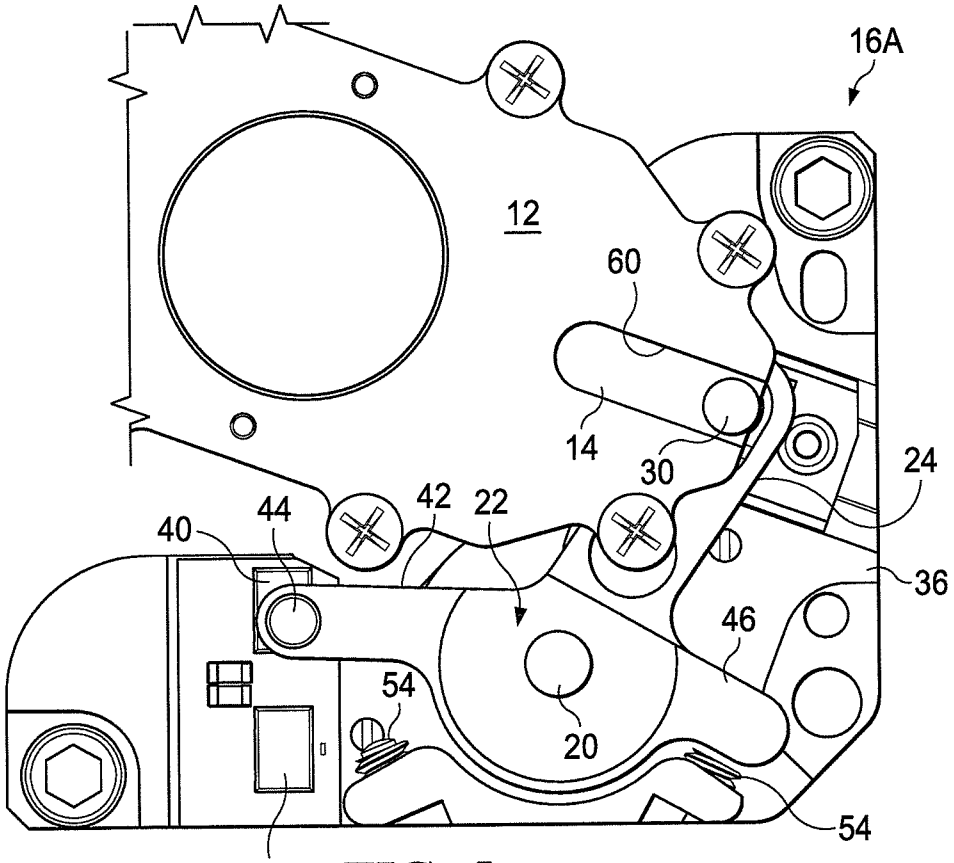

FIG. 5

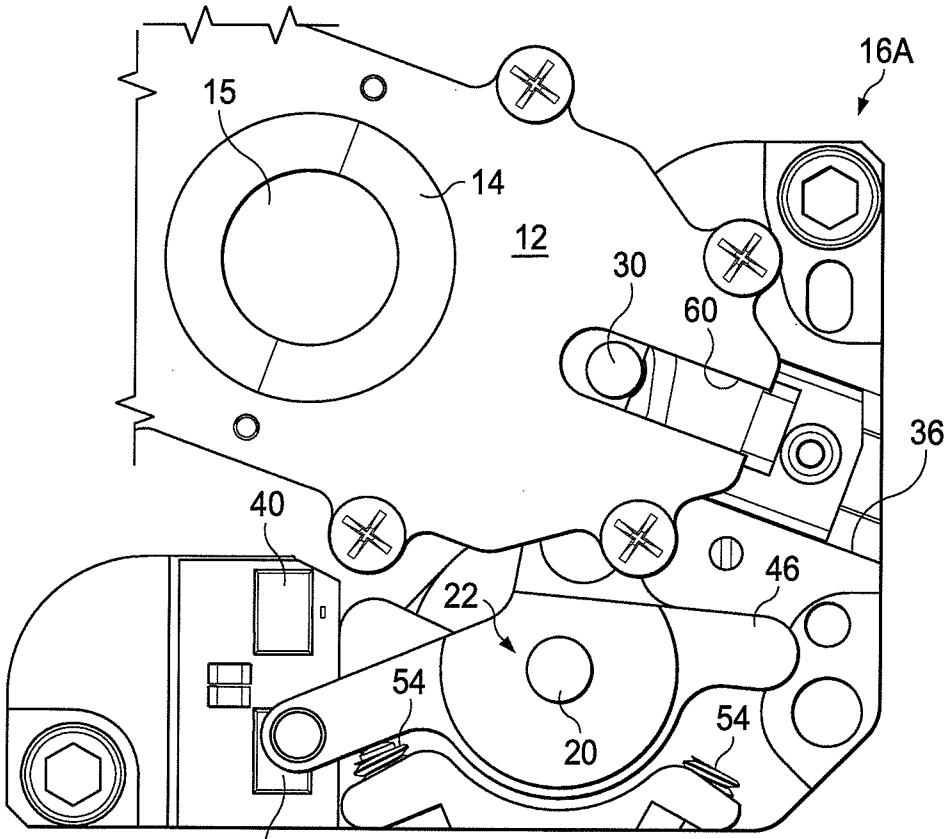

FIG. 6

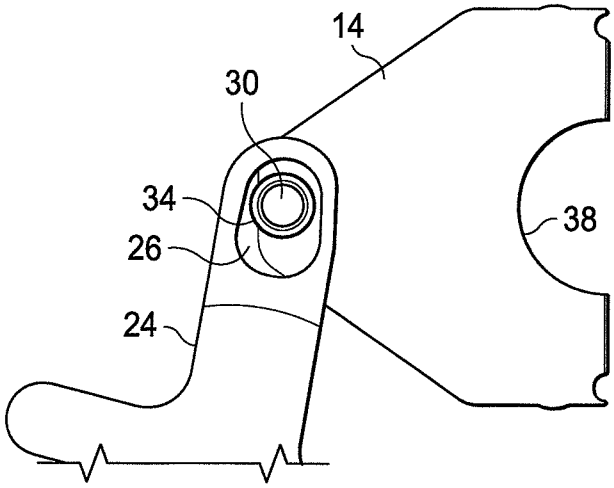

FIG. 7

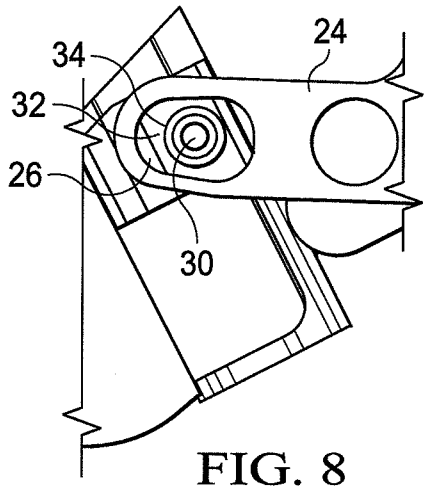

FIG. 8

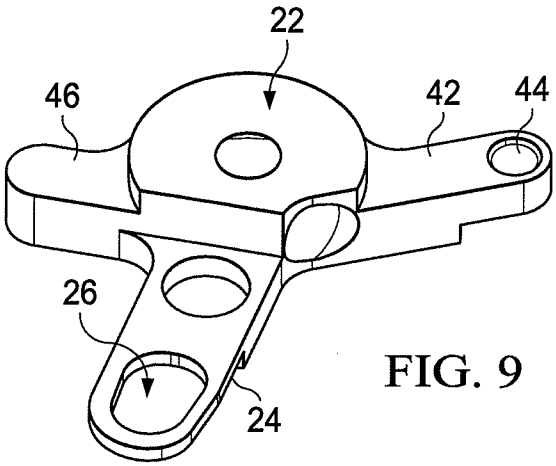

FIG. 9

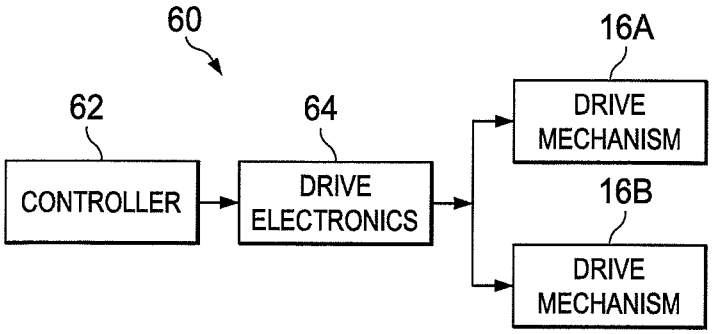
60
62
64
16A
16B
CONTROLLER
DRIVE ELECTRONICS
DRIVE MECHANISM
DRIVE MECHANISM

FIG. 10

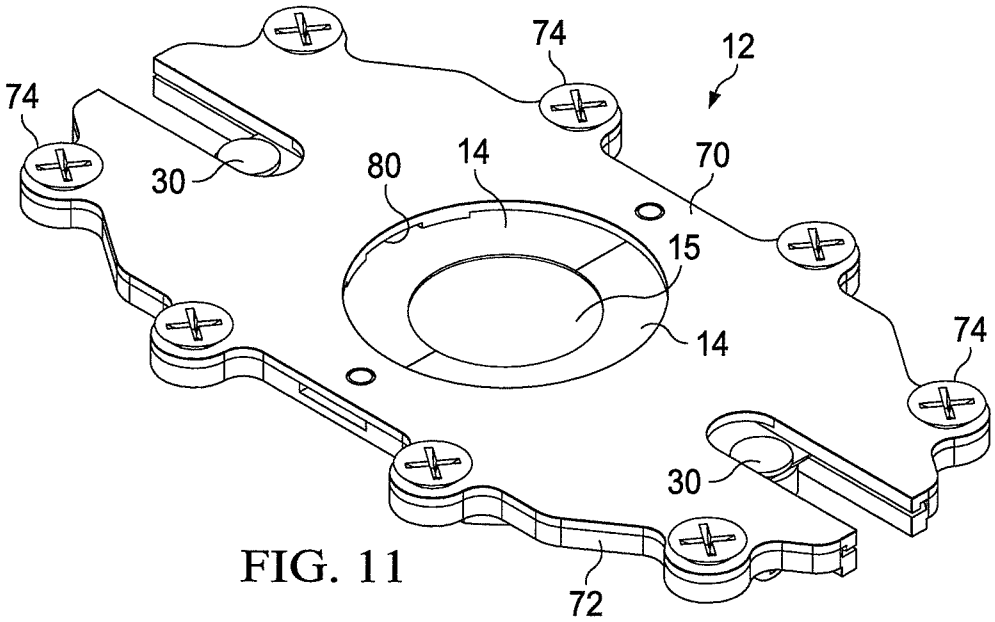
74
74
12
30
80
14
70
15
14
74
30
72

FIG. 11

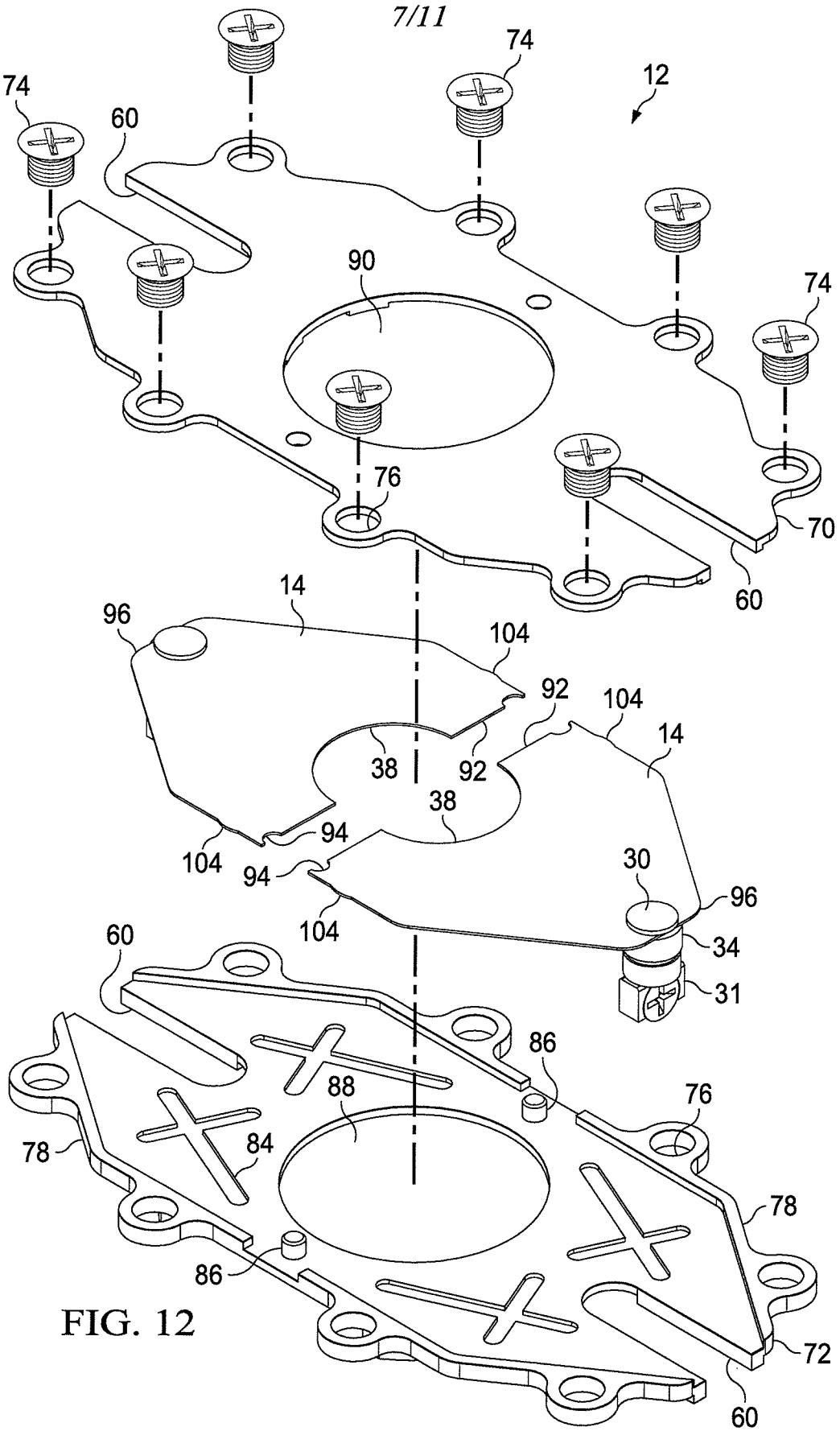
74
74
12
60
90
74
76
70
60
14
96
104
92
104
14
38
92
38
94
104
94
30
96
104
34
31
60
86
88
76
78
84
78
86
72
60

FIG. 12

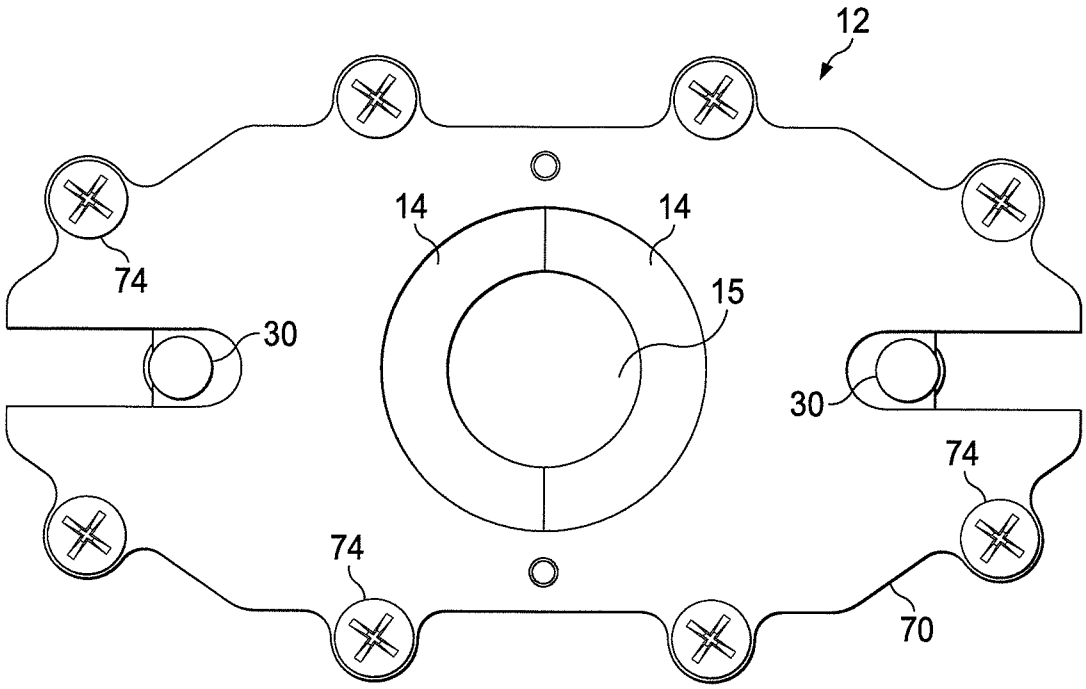

FIG. 13A

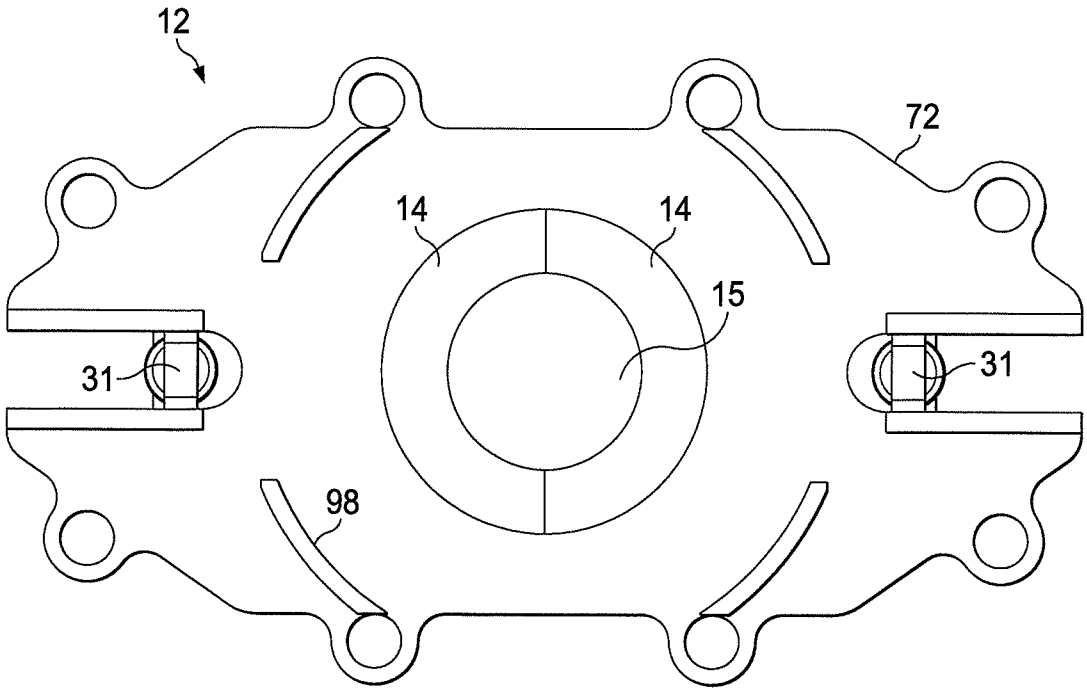

FIG. 13B

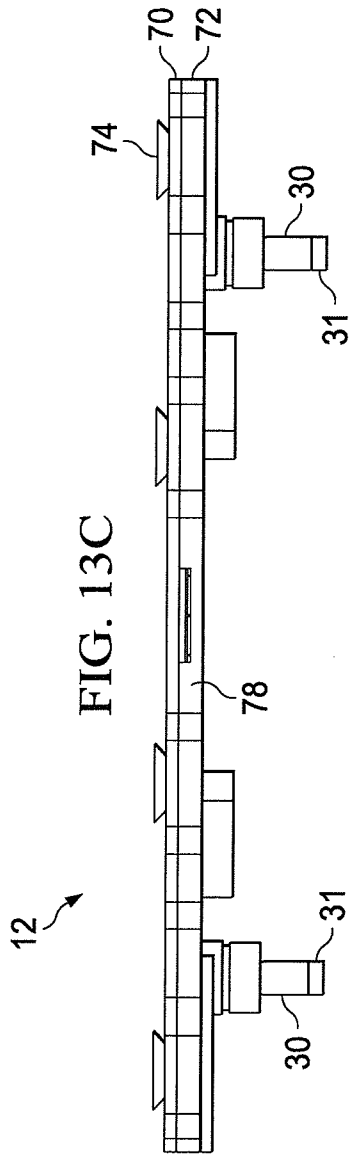

FIG. 13C

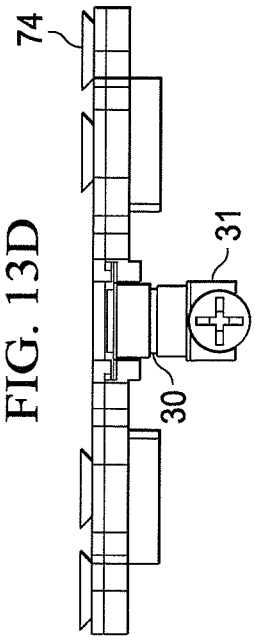

FIG. 13D

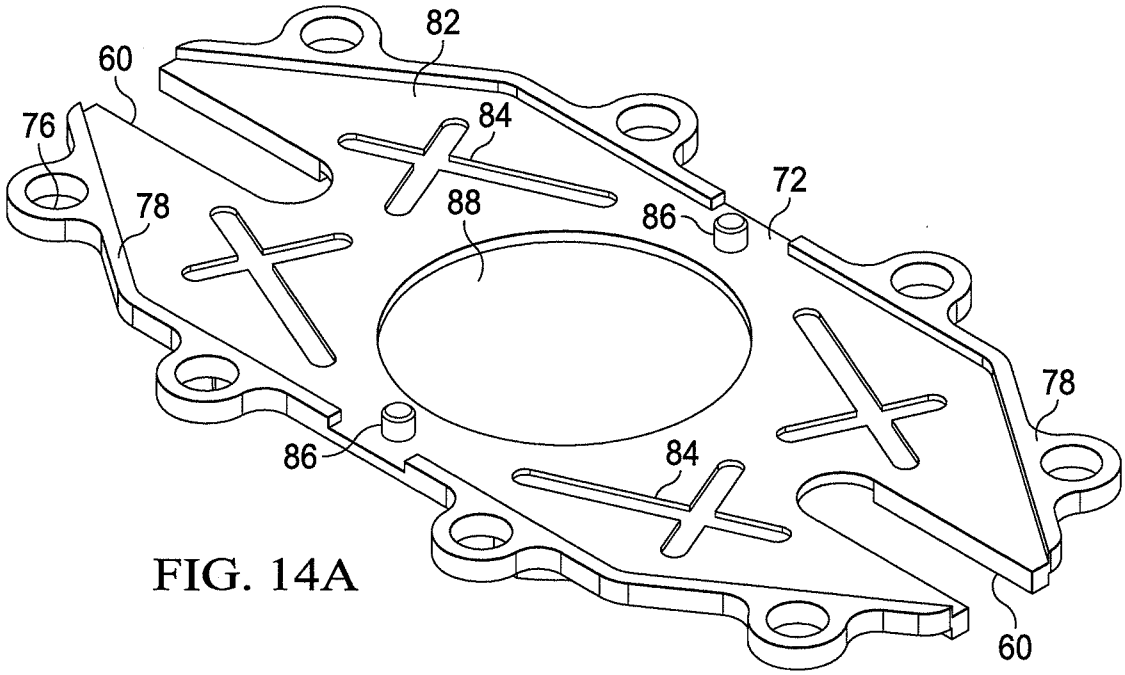

FIG. 14A

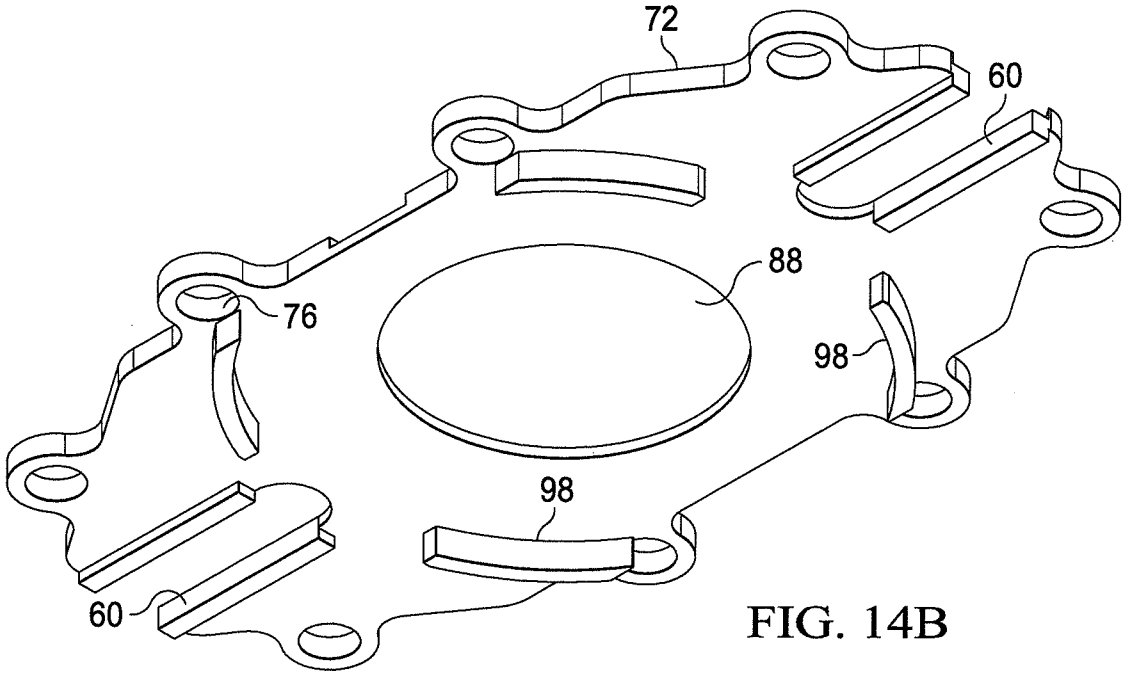

FIG. 14B

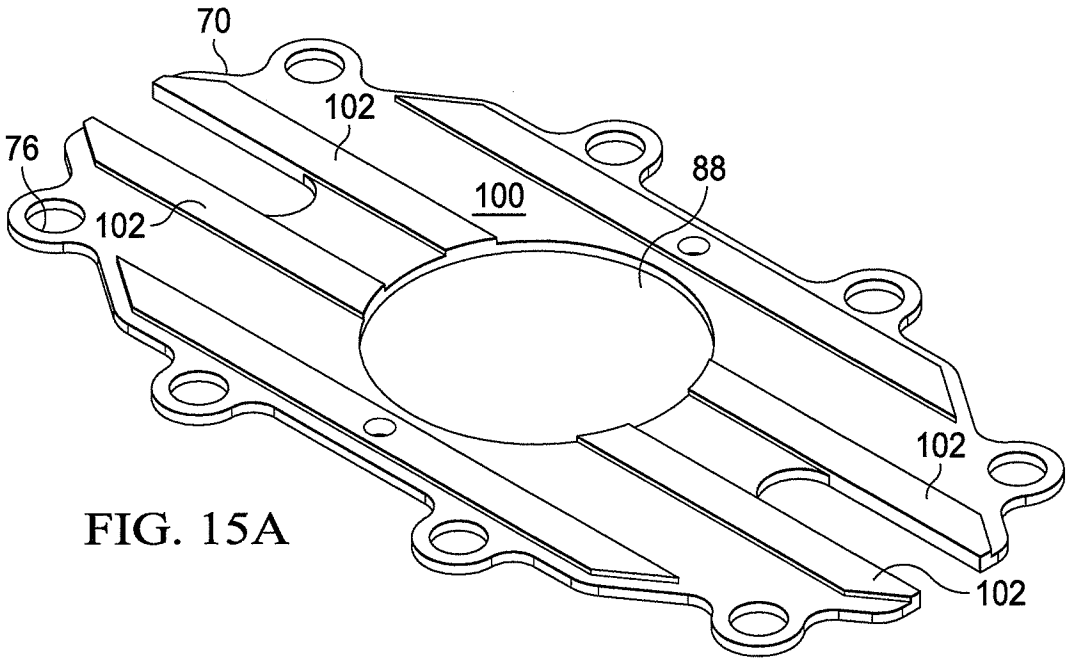

FIG. 15A

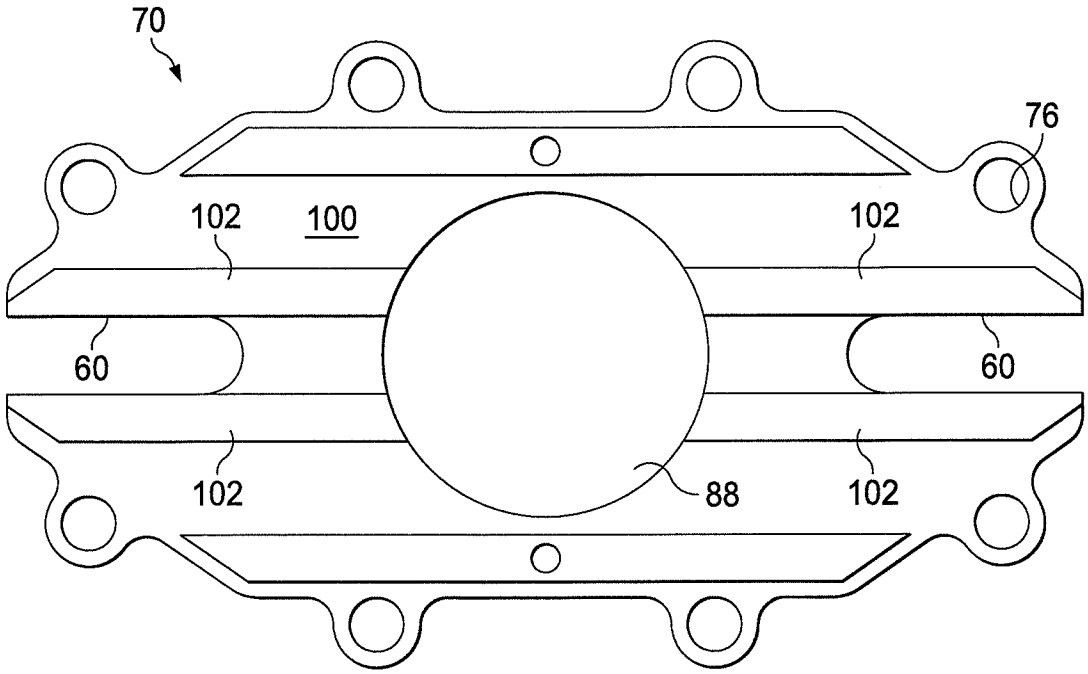

FIG. 15B

INTERNATIONAL SEARCH REPORT

International application No
PCT/US2014/041769

A. CLASSIFICATION OF SUBJECT MATTER
INV. G03B9/02 G01J5/08
ADD.

According to International Patent Classification (IPC) or to both national classification and IPC

B. FIELDS SEARCHED

Minimum documentation searched (classification system followed by classification symbols)
G03B G01J

Documentation searched other than minimum documentation to the extent that such documents are included in the fields searched

Electronic data base consulted during the international search (name of data base and, where practicable, search terms used)
EPO-Internal, WPI Data

C. DOCUMENTS CONSIDERED TO BE RELEVANT

Category*	Citation of document, with indication, where appropriate, of the relevant passages	Relevant to claim No.
X	US 8 164 813 B1 (GAT NAHUM [US] ET AL) 24 April 2012 (2012-04-24)	1,3,5,6, 11-13, 15,20
Y	columns 5-8; figures 1,2,3,4,8	2,4,10, 14,15
A		7-9, 16-19

X	US 3 938 168 A (LANGE KARL-HEINZ) 10 February 1976 (1976-02-10)	1,6,13, 20
Y	the whole document	4,14

X	US 2008/304126 A1 (POWELL DONALD A [US] ET AL) 11 December 2008 (2008-12-11)	1,3-6, 11-15,20
Y	paragraphs [0114] - [0127]; figures 7,8	5,10

	-/--	

[X] Further documents are listed in the continuation of Box C.

[X] See patent family annex.

* Special categories of cited documents :

"A" document defining the general state of the art which is not considered to be of particular relevance

"E" earlier application or patent but published on or after the international filing date

"L" document which may throw doubts on priority claim(s) or which is cited to establish the publication date of another citation or other special reason (as specified)

"O" document referring to an oral disclosure, use, exhibition or other means

"P" document published prior to the international filing date but later than the priority date claimed

"T" later document published after the international filing date or priority date and not in conflict with the application but cited to understand the principle or theory underlying the invention

"X" document of particular relevance; the claimed invention cannot be considered novel or cannot be considered to involve an inventive step when the document is taken alone

"Y" document of particular relevance; the claimed invention cannot be considered to involve an inventive step when the document is combined with one or more other such documents, such combination being obvious to a person skilled in the art

"&" document member of the same patent family

Date of the actual completion of the international search	Date of mailing of the international search report
4 November 2014	12/11/2014

Name and mailing address of the ISA/	Authorized officer
European Patent Office, P.B. 5818 Patentlaan 2 NL - 2280 HV Rijswijk Tel. (+31-70) 340-2040, Fax: (+31-70) 340-3016	Rückerl, Ralph

2

Form PCT/ISA/210 (second sheet) (April 2005)

INTERNATIONAL SEARCH REPORT

International application No
PCT/US2014/041769

C(Continuation). DOCUMENTS CONSIDERED TO BE RELEVANT

Category*	Citation of document, with indication, where appropriate, of the relevant passages	Relevant to claim No.
X	JP 2007 114672 A (NISCA CORP) 10 May 2007 (2007-05-10) paragraphs [0031] - [0032]; figures 2,4	1,13
Y	US 2004/238741 A1 (GAT NAHUM [US] ET AL) 2 December 2004 (2004-12-02) paragraphs [0024], [0055]	2,5
Y	EP 2 416 216 A1 (SAMSUNG ELECTRONICS CO LTD [KR]) 8 February 2012 (2012-02-08) paragraph [0026]; figure 3	15

2

INTERNATIONAL SEARCH REPORT

Information on patent family members

International application No
PCT/US2014/041769

Patent document cited in search report	Publication date	Patent family member(s)	Publication date
US 8164813 B1	24-04-2012	US 8164813 B1	24-04-2012
		US 8462418 B1	11-06-2013
US 3938168 A	10-02-1976	DE 2408932 A1	04-09-1975
		FR 2273296 A1	26-12-1975
		GB 1454669 A	03-11-1976
		IT 1025413 B	10-08-1978
		US 3938168 A	10-02-1976
US 2008304126 A1	11-12-2008	AU 2008262163 A1	18-12-2008
		CA 2683704 A1	18-12-2008
		EP 2167998 A1	31-03-2010
		JP 2010530981 A	16-09-2010
		US 2008304126 A1	11-12-2008
		WO 2008154087 A1	18-12-2008
JP 2007114672 A	10-05-2007	JP 4846337 B2	28-12-2011
		JP 2007114672 A	10-05-2007
US 2004238741 A1	02-12-2004	NONE	
EP 2416216 A1	08-02-2012	CN 102375289 A	14-03-2012
		EP 2416216 A1	08-02-2012
		KR 20120013595 A	15-02-2012
		US 2012033961 A1	09-02-2012