J. B. MONETTE.
REFRIGERATING APPARATUS.
APPLICATION FILED MAR. 11, 1910.

964,041.

Patented July 12, 1910.

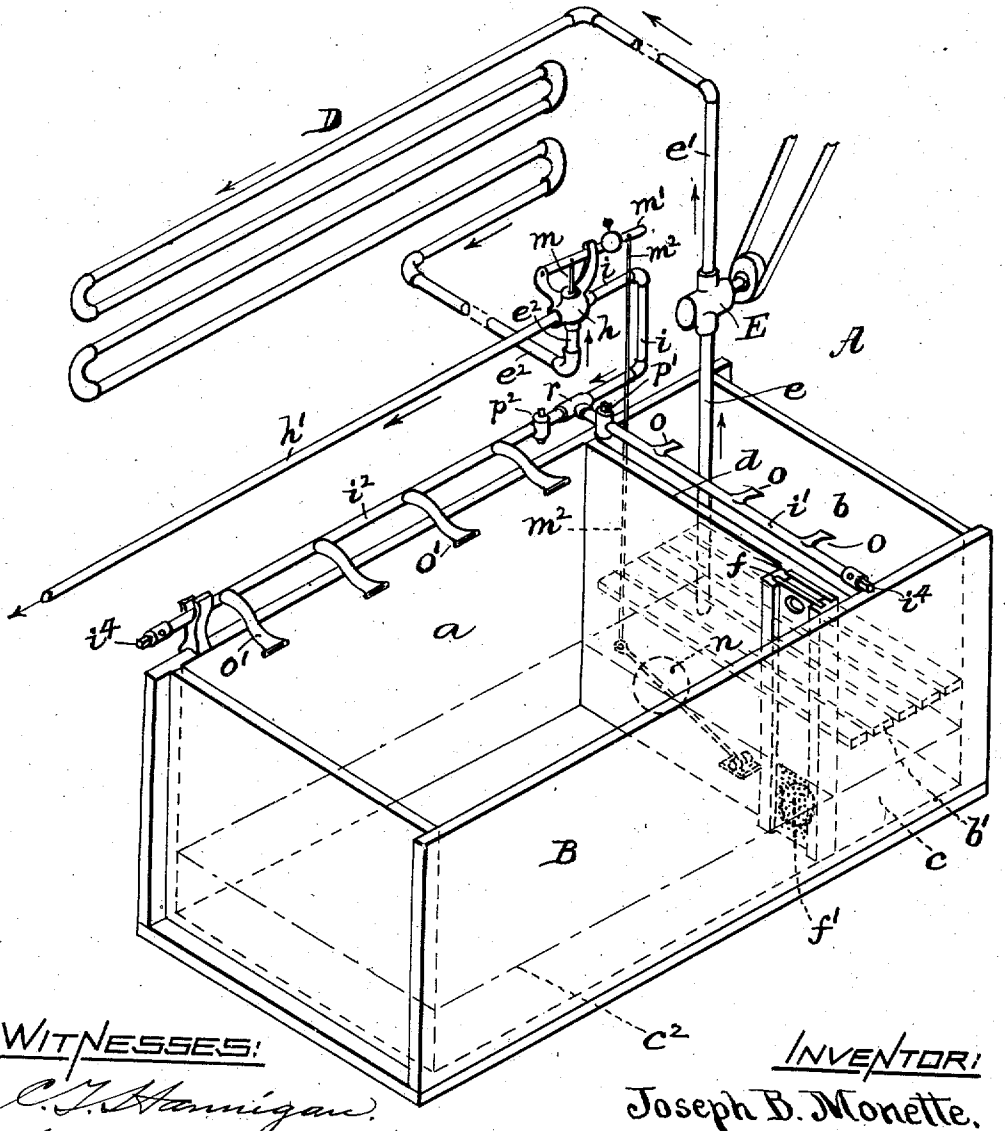

WITNESSES:
C. T. Hannigan.
Calvin H. Brown

INVENTOR:
Joseph B. Monette.
By Geo. H. Remington,
Atty.

THE NORRIS PETERS CO., WASHINGTON, D. C.

UNITED STATES PATENT OFFICE.

JOSEPH B. MONETTE, OF PROVIDENCE, RHODE ISLAND.

REFRIGERATING APPARATUS.

964,041. Specification of Letters Patent. Patented July 12, 1910.

Application filed March 11, 1910. Serial No. 548,633.

To all whom it may concern:

Be it known that I, JOSEPH B. MONETTE, a citizen of the United States, residing at Providence, in the county of Providence and State of Rhode Island, have invented certain new and useful Improvements in Refrigerating Apparatus, of which the following is a specification.

This invention relates in general to refrigerating apparatus, and more especially to the novel features of construction, all as hereinafter set forth and claimed.

In the accompanying sheet of drawings is represented a perspective view of a refrigerating apparatus embodying my present improvements.

The apparatus as a whole is designated by A; this includes the tank proper B, divided into a plurality of compartments or chambers; a refrigerating coil or piping having any suitable form and arrangement; means for circulating the brine or refrigerating medium through the coil; and means for automatically controlling the volume of return or heat absorbed brine discharged from the coil into the tank to be enriched or recharged and recooled before it is again returned into the circulation. The said tank A is represented as being rectangular, but it may have any suitable size or dimensions. It is divided into three principal compartments: *a*, the larger one, being the chamber for containing ice; *b*, the smaller chamber, located at one end of the tank, is for holding bags of salt; and the bottom compartment, *c*, located immediately below the chamber *b*, constitutes the brine chamber proper. The bottom of chamber *b* is apertured or it may consist of a series of laterally separated slats b^1 disposed horizontally a suitable distance above the base of the tank. The chamber *a* is separated from chambers *b* and *c* by means of the vertical transverse partition *d* which extends to the bottom of the tank. An opening is formed in the partition below the said slats b^1, thus adapting the brine-chamber to communicate with the ice-chamber. This opening, however, I prefer to protect by means of a pair of manually controlled, superimposed, independent vertically slidable, elongated gates *f f*, each having a strainer f^1 registering with the said opening. These strainers are employed to prevent the entrance of foreign matter into the brine-chamber proper from the ice-chamber. As thus disposed, it is obvious that the gates may be readily removed, one at a time, for inspection, cleaning, &c. As constructed, the level of the liquid or brine will be substantially uniform in both compartments *a* and *c*.

A suitable suction rotary or brine circulating pump E is positioned at or near the tank, its suction or intake-pipe *e* extending downward into the brine chamber *c*. The delivery-pipe e^1, or supply-main, from the pump is adapted to connect with a more or less remotely located refrigerating-coil D, the function of the latter, when in use, being to lower the temperature of air in the room or place containing the coil, in a well-known manner or principle. The return or discharge end portion e^2 of the coil is in open communication with and constitutes the intake-connection of a suitable valve or cock, as for example the valve *h*. The latter is provided with an outlet nozzle communicating with piping *i* and the horizontal branch or distributing pipes i^1, i^2 for returning more or less of the brine back into the tank for reuse. Obviously, the temperature of the thus returned circulated brine is materially higher than that of the refrigerating fluid before it entered the coil. The valve *h* is also provided with a nozzle communicating with a pipe h^1 for carrying off the overflow or waste brine, all as clearly indicated. The valve may have a stem *m* connected with a weighted swinging lever m^1, in turn attached to a suitably mounted ball-float *n* by means of a link or rod m^2; the said float-member being located in the brine-chamber *c* and below the slats b^1, so as to provide space for its free movements corresponding with fluctuations in the level of the brine. As thus arranged, the function of the float is to automatically actuate the valve in a well-known manner. That is to say, in case the brine rises in its chamber *c* above the normal or predetermined level c^2, due say to recharging the chamber *a* with ice, the melting of ice, or from any other cause, the float acts to correspondingly open the valve, thereby permitting such surplus brine to flow into the pipe h^1 to waste; the action being continued until the normal level of the brine is restored. Even in normal action more or less brine is being continually discharged into the waste-pipe. It may be added, too, that the pump is assumed to be running at its normal speed and capacity at all times.

In lieu of returning the circulated brine into the chambers *a* and *b* direct from the said branch-pipes i^1, i^2, I prefer to provide the latter with suitably spaced nozzles *o*, o^1, respectively, each having its outlet flattened or otherwise constructed so as to discharge the fluid in a thin, sheet-like form. As drawn, the said pipe *i*, leading from valve *h*, is connected with a suitable tee or chambered casting *r*, having the nozzle-carrying outlet-pipes i^1, i^2, extending therefrom at right angles to each other in a horizontal plane. If desired, the last-named pipes may be provided with a cock or valve p^1, p^2, respectively, thus providing means adapted for controlling or regulating the discharge of fluid from the nozzles. Obviously, one or both pipes may be opened or closed at will. In order to render the tanks *a* and *b* more conveniently accessible while they are being charged, respectively, with the ice and salt, the outlet-pipes may be fitted to the said member *r*, so as to be swung in an axial direction; the free end of each pipe being provided with a wrench-receiving cap i^4 for the purpose, all as clearly shown.

In the following description of the operation of my improved refrigerating apparatus A, it is assumed that the pump E is running, the gates *f*, separating chambers *a* and *c* being closed, and that the piping of the system is already charged with the cooling liquid or brine; the latter standing in the bottom of the tank B, say at the normal level c^2. It should be stated that the chamber *a* is filled with ice; the chamber *b* being charged with salt, preferably contained in bags, resting on the slats b^1. The action of the pump causes the brine to circulate through the cooling coil D, &c., of the system, and is discharged via the automatic valve *h*, piping *i*, i^1, i^2, through the several preadjusted outlet or spraying nozzles *o*, o^1, into the chambers *b* and *a*. The thus discharged liquid flowing from the outlets *o* falls upon and percolates through the bags of salt and into the brine chamber *c*, while at the same time the liquid from the outlet-nozzles o^1 flows onto the ice and mingles with the colder brine in the bottom of chamber *a*. The pump creates more or less of a circulation of the brine in drawing the latter into the suction-pipe *e*; the screened gates *f* at the same time excluding foreign matter and impurities from chamber *c*.

It may be added that the ice in chamber *a* gradually melts and dilutes the brine. Such liquefaction is or may be due to the higher temperature of the surrounding air and also to the action of the relatively warm brine being discharged from the nozzles onto the ice. In order to enrich or strengthen the brine, the valve p^1 is or may be adjusted so as to deliver an increased volume of discharge from nozzles *o*, the valve p^2 at the same time being manipulated to decrease the outflow of liquid from the nozzles o^1. By means of these valves the volume of discharge from the nozzle *o*, o^1, may be very accurately gaged and controlled as desired, while any surplus brine from the coil is conducted away from the main valve *h* via waste-pipe h^1. Conversely, in case the brine is too strong, the outflow from nozzle *o* may be temporarily restricted and the discharge from nozzles o^1 relatively increased until the desired degree of solution is attained. It is obvious, too, that water from any suitable source of supply may be introduced into the tank.

What I claim as my invention and desire to secure by United States Letters Patent is:—

1. In a refrigerating system of the general character described, the combination with a main tank having independent ice, salt and brine compartments disposed therein, of an air-cooling coil, a power-driven pump having its intake and outlet pipes communicating respectively with the brine compartment and said coil for circulating brine or refrigerating liquid through the latter, a valve connected with the discharge end of the coil, having its movements automatically controlled by variations in the height of liquid in the brine-chamber, and suitably located apertured branch pipes leading from the valve for discharging the return brine from the latter into the ice and brine chambers.

2. In a refrigerating system of the character described, the combination of a main tank, having an apertured partition disposed vertically therein, a chamber or compartment for containing ice, a chamber separated from the ice chamber by means of said partition for holding salt or other analogous substance, a brine chamber proper disposed below the salt chamber and being in open communication with it by means of an apertured horizontal partition, removable screen gates interposed between the ice and brine chambers, located contiguous to the apertured portion of the said vertical partition, a refrigerating-coil, and means adapted for circulating the brine from its chamber through the coil and returning it back from the latter into the ice and brine chambers.

3. In a refrigerating system of the character described, having a main tank provided with communicating ice and brine chambers, and a salt-holding compartment located above and communicating with the brine chamber, but separated from the ice compartment, the combination therewith of a refrigerating-coil, means adapted for circulating brine from the brine-chamber through the coil, piping located contiguous to the ice and salt chambers provided with spraying nozzles or outlets, and con-

trolled means connected with the discharge end of the coil and with said piping arranged for spraying the used brine direct onto the ice and salt contained in the respective chambers.

4. In a refrigerating system of the character described, a tank provided with three suitably disposed, practically independent chambers for containing ice, salt, and brine, respectively, the combination therewith of a refrigerating-coil, means for circulating brine from the brine-chamber through the coil, controlled spraying or nozzle-carrying discharge-piping located above the said ice and salt chambers, and means interposed between and connecting said piping and coil for controlling the volume of brine to be returned to the tank.

In testimony whereof I have affixed my signature in presence of two witnesses.

JOSEPH B. MONETTE.

Witnesses:

CALVIN H. BROWN,

GEO. H. REMINGTON.