**PCT** WORLD INTELLECTUAL PROPERTY ORGANIZATION
International Bureau

INTERNATIONAL APPLICATION PUBLISHED UNDER THE PATENT COOPERATION TREATY (PCT)

| (51) International Patent Classification 5 : | | (11) International Publication Number: |
|---|---|---|
| A61M 29/00 | A1 | WO 94/03230 |
| | | (43) International Publication Date: 17 February 1994 (17.02.94) |

(21) International Application Number: PCT/US93/07337

(22) International Filing Date: 4 August 1993 (04.08.93)

(30) Priority data:
07/925,864 7 August 1992 (07.08.92) US

(71) Applicant: BOSTON SCIENTIFIC CORPORATION [US/US]; 480 Pleasant Street, Watertown, MA 02172 (US).

(72) Inventor: KONTOS, Stavros, B. ; 11 Bear Brook Drive, Woodcliff Lake, NJ 07675 (US).

(74) Agent: WILLIAMS, John, N.; Fish & Richardson, 225 Franklin Street, Boston, MA 02110 (US).

(81) Designated States: CA, JP, European patent (AT, BE, CH, DE, DK, ES, FR, GB, GR, IE, IT, LU, MC, NL, PT, SE).

**Published**
*With international search report.*
*Before the expiration of the time limit for amending the claims and to be republished in the event of the receipt of amendments.*

(54) Title: SUPPORT CATHETER ASSEMBLY

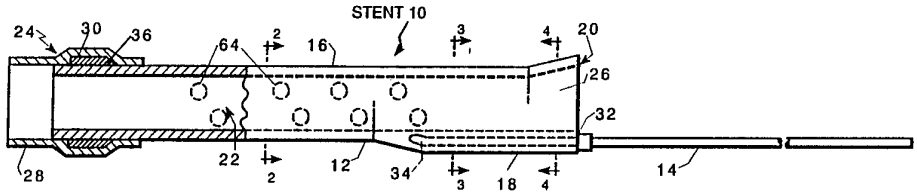


(57) Abstract

A support catheter assembly (10) for facilitating medical procedures includes a tubular body and a continuous lumen from its proximal end to its distal end. A manipulating member is connected to the tubular body (12) for inserting, advancing, withdrawing and maneuvering the body during a medical procedure. The manipulating member may be a wire (14) of a manipulating tube (16). The tubular body also may be provided with a funnel shaped (26) lumen opening at its proximal end to facilitate insertion of devices therethrough, and radiopaque markers for subcutaneously detecting the location of the device during a medical procedure and, more particularly, for detecting its location relative to other devices used in the medical procedure. A method also is disclosed for using the tube assembly to facilitate insertion of a PTCA catheter into a stenotic region and for holding open the lumen through that region after angioplasty has been performed.

*FOR THE PURPOSES OF INFORMATION ONLY*

Codes used to identify States party to the PCT on the front pages of pamphlets publishing international applications under the PCT.

| | | | | | |
|---|---|---|---|---|---|
| **AT** | Austria | **FR** | France | **MR** | Mauritania |
| **AU** | Australia | **GA** | Gabon | **MW** | Malawi |
| **BB** | Barbados | **GB** | United Kingdom | **NE** | Niger |
| **BE** | Belgium | **GN** | Guinea | **NL** | Netherlands |
| **BF** | Burkina Faso | **GR** | Greece | **NO** | Norway |
| **BG** | Bulgaria | **HU** | Hungary | **NZ** | New Zealand |
| **BJ** | Benin | **IE** | Ireland | **PL** | Poland |
| **BR** | Brazil | **IT** | Italy | **PT** | Portugal |
| **BY** | Belarus | **JP** | Japan | **RO** | Romania |
| **CA** | Canada | **KP** | Democratic People's Republic of Korea | **RU** | Russian Federation |
| **CF** | Central African Republic | | | **SD** | Sudan |
| **CG** | Congo | **KR** | Republic of Korea | **SE** | Sweden |
| **CH** | Switzerland | **KZ** | Kazakhstan | **SI** | Slovenia |
| **CI** | Côte d'Ivoire | **LI** | Liechtenstein | **SK** | Slovak Republic |
| **CM** | Cameroon | **LK** | Sri Lanka | **SN** | Senegal |
| **CN** | China | **LU** | Luxembourg | **TD** | Chad |
| **CS** | Czechoslovakia | **LV** | Latvia | **TG** | Togo |
| **CZ** | Czech Republic | **MC** | Monaco | **UA** | Ukraine |
| **DE** | Germany | **MG** | Madagascar | **US** | United States of America |
| **DK** | Denmark | **ML** | Mali | **UZ** | Uzbekistan |
| **ES** | Spain | **MN** | Mongolia | **VN** | Viet Nam |
| **FI** | Finland | | | | |

# SUPPORT CATHETER ASSEMBLY

## Background of the Invention

### Field of the Invention

The present invention relates generally to a medical device and procedures for employing the device. More particularly, it relates to a support catheter assembly with particular utility in facilitating insertion of a PTCA balloon into a lesion. The present invention also has utility as a stent, for maintaining a continuous passage, e.g., through an area of an artery or vein which is otherwise susceptible to collapsing or restenosing.

### Description of the Prior Art

PTCA catheters and percutaneous medical procedures for angioplasty are well known. In such procedures, a flexible PTCA catheter generally is percutaneously inserted into a blood vessel of a patient and guided through the patient's vascular system to the location of a restriction. Insertion and manipulation of the PTCA catheter is frequently facilitated by use of a guide catheter. However, often these guide catheters are not able to reach all the way to the restriction. Thus, the gap between the distal end of the guide catheter and the stenotic region to be opened must be traversed by the PTCA catheter alone.

As those skilled in the art know, the distal end of a PTCA catheter is made to be extremely soft and flexible so as to facilitate its passage through tortuosities and restrictions in the vascular system. This flexibility, however, also makes the catheter readily susceptible to kinking and bending. The guide catheter is employed, at least in part, to restrict the radial deflection of the PTCA catheter and thereby prevent buckling and kinking. The guide catheter, however, can generally reach only to the coronary ostia, whereas the lesion to be opened is most

commonly located in one of the coronary arteries leading from the ostia. Thus, the balloon catheter must negotiate the ostia, enter the coronary artery and pass through the coronary artery to the lesion without the help of the guide catheter (see Figure 14). The instant invention may be used to facilitate the passage of the balloon catheter from the end of the guide catheter to the lesion.

Support structures for advancing and guiding a PTCA balloon catheter are well known. As discussed above, a guide catheter provides an independent support structure. Integral support structures also have been developed. For example, U.S. Patent No. 4,762,129 (Bonzel) describes a dilation catheter which includes a balloon capable of being enlarged by injecting a fluid through an aspiration tube that terminates in the balloon. The aspiration tube is arranged laterally offset from a segment of flexible tube that forms a passage through the balloon for a guide wire. The aspiration tube, which is reinforced with a stabilizing wire, also serves to transmit thrust and tension forces to push and pull the balloon to and fro and rotate it on the guide wire. Coronary arterial stenoses generally are caused by the accumulation of plaque on the artery wall. Angioplasty reduces the arterial restriction by expanding a balloon within the stenotic region and compressing the plaque against the vessel wall, thereby increasing the size of the lumen in that region. However, the plaque has a tendency to return to its original form and again close down or severely restrict the arterial lumen. This restenosing, if it occurs, may occur as quickly as within only a few minutes, although it may not occur for a few weeks, or even for several months. The tendency for restenosis is of particular concern where angioplasty is performed preparatory to surgery, when it is imperative that the passage through the artery be kept open, at least until the surgeon has had an opportunity to operate.

## Summary of the Invention

The present invention provides a support catheter, which can also function as a stent, connected to means such as a wire handle, to facilitate its insertion and manipulation. By use of such manipulating means, the support catheter can be inserted into and passed through a guide catheter, over a PTCA catheter, and out the distal end of the guide catheter so as to function as an extension of the guide catheter to bridge the gap (or at least some of it) between the end of the guide catheter and the stenosis to be opened. The present invention permits a physician to deliver, with greatly reduced risk of bending or kinking, a PTCA catheter to a Site of coronary vessel restriction. It also facilitates the exchange of one catheter for a larger or smaller one. In addition, it provides a structure which can be inserted, after angioplasty, into a newly opened area of the lesion, thereby to prevent restenosis. Also, the support catheter of the instant invention can be made small enough to enter the coronary artery, something the guide catheter could not do. In one embodiment of the present invention, the manipulating means is a wire attached to the proximal end of the support catheter. In another embodiment of the present invention, the manipulating means is an extension tube. The extension tube is attached to the proximal end of the support catheter, and is provided with a longitudinally extending slit, e.g., for passing therethrough a guide wire or PTCA catheter tube. This structure provides direct access to the support catheter assembly at the proximal end of a guide catheter for fast insertion, withdrawal, or exchange of various balloon catheters.

Brief Description of the Drawings

These and other features and advantages of the present invention readily will be apparent from the following detailed description read in conjunction with the accompanying drawings, wherein:

Figure 1 is a side plan view of a support catheter of the present invention, cut-away in part to show in longitudinal cross-section a tubular body having a soft tip and radiopaque marker, and a manipulating wire.

Figure 2 is a cross-sectional view, taken along line 22 of Figure 1, of one embodiment of a tubular body of the present invention.

Figure 3 is a cross-sectional view, taken along line 33 of Figure 1, illustrating a base portion of the tubular body of one embodiment of the present invention.

Figure 4 is a cross-sectional view, taken along line 44 of Figure 1, illustrating a funnel opening of the base portion of one embodiment of the present invention. Figure 5 is a side schematic view of a support catheter of the present invention having a PTCA catheter disposed therein.

Figures 6A to 6C are cross-sectional views showing schematically three stages in a process for guiding a PTCA catheter to a coronary artery lesion employing a support catheter according to the present invention.

Figure 7 is a schematic cross-sectional view of a lesion area of a coronary artery having a support catheter of the present invention distally extended from a guide catheter for delivering a PTCA catheter to a restriction in the artery.

Figures 8A to 8C are cross-sectional views showing schematically three stages in a process for guiding a PTCA catheter to a coronary artery lesion, for progressively opening two sequential restrictions in a coronary artery and for disposing a support catheter of the present invention in the opened lesion to inhibit restenosis after

withdrawal of the PTCA catheter.

Figure 9 is a schematic cross-sectional view of a lesion area of a coronary artery having a support catheter of the present invention resident therein for delivering a PTCA catheter to a restriction within the artery.

Figure 10 is a side plan view of a second embodiment of a support catheter of the present invention, cut-away to show in longitudinal cross-section a tubular body having a soft tip and radiopaque marker, and an extension tube having a longitudinal slit therein.

Figure 11 is a cross-sectional view, taken along line 11-11 of Figure 10, illustrating a portion of the tubular body of a second embodiment of the invention.

Figure 12 is a cross-sectional view, taken along line 12-12 of Figure 10, illustrating a longitudinal slit of the extension tube of a second embodiment of the invention.

Figure 13 is a cross-sectional view, taken along line 13-13 of Figure 10, illustrating a funnel opening of the extension tube of a second embodiment of the invention.

Figure 14 is a schematic cross-sectional view of the aorta, the coronary ostia and two coronary arteries illustrating an angioplasty procedure employing a support catheter of the instant invention.

## Description of the Preferred Embodiments

Referring now to the drawings, wherein like reference numerals correspond to like or similar elements throughout, Figures 1 to 4 illustrate a support catheter assembly (hereinafter "support assembly") 10 of the present invention.

Support assembly 10 is composed of two major elements, a body 12 and an insertion/manipulation wire 14. Body 12, which may be viewed as a mini guide catheter, includes a tube 16 having a base portion 18 at its proximal

end 20. Tube 16 has a continuous lumen 22 therethrough from proximal end 20 to distal end 24. Body 12 also may include a funnel portion 26 formed at proximal end 20, and a soft tip 2a disposed at distal end 24. Wire 14 is attached to body 12 at base portion 18. Support assembly 10 also may include a distal marker band 30 and a proximal marker band 32.

As shown in Figures 1 to 4, tube 16 is generally cylindrical. More specifically, as shown in Figures 1 and 2, at distal end 24, tube 16 and lumen 22 are cylindrical and coaxial. As best shown in Figures 1 and 3, at proximal end 20, the outer wall of tube 16 is enlarged on one side (bottom side in Figures 1, 3 and 4) to form base portion 18, and may be flared out at proximal end 20 to 25 form funnel portion 26. However, lumen 22 generally is continuous throughout.

It will be appreciated that the conical opening of lumen 22 at funnel portion 26 facilitates insertion of a PTCA catheter or the like therethrough. Tube 16 may be composed of any pliable material suitable for percutaneous medical procedures, but preferably is composed of a molded plastic material, such as polyethylene. Referring again to Figure 1, soft tip 28 generally is cylindrical in shape and extends coaxially from distal end 24 of tube 16. Soft tip 28 may be composed of any highly flexible material suitable for percutaneous 5 medical procedures, but preferably is composed of a soft plastic such as a copolymer of polyethylene and ethylvinylalcohol (EVA). It will be appreciated that a soft, flexible, pliable distal tip substantially reduces the risk of injury to a vessel wall, as well as of inadvertently dislodging portions of plaque from a lesion during manipulation of body 12.

Marker band 30, which is disposed at distal end 24, is preferably composed of a material that is detectable subcutaneously through the use of X-ray or fluoroscopy

techniques, i.e., it is preferably radiopaque. As shown in Figure 1, marker band 30 may be retained between soft tip 28 and tube 16 within recess 36. Of course, numerous other methods for disposing marker band 30 at distal end 24 will be readily apparent to those skilled in the art.

Insertion wire 14 is attached to base portion 18 at proximal end 20 of tube 16, and preferably is permanently affixed thereto. For example, as best shown in Figures 1, 3 and 4, wire 14 may be connected to base portion 18 by inserting it into a receiving hole 34, and affixing it therein by, for example, gluing, pressure fitting, shrink fitting, or the like. Alternatively, tube 16 may be molded directly onto application wire 14. Numerous other methods of connecting wire 14 to body 12 will readily occur to those skilled in the art. It will be appreciated that this configuration, wherein tube 16 has an eccentric cross-section at base portion 18 and wire 14 is affixed thereto, provides leverage for facilitating manipulation of body 12.

As shown in Figure 1, a marker band 32 also may be disposed at the proximal end of bridge tube 16, e.g., on manipulating wire 14 adjacent base portion 1~, and preferably is affixed thereto, e.g., by brazing or crimping. Marker band 32 also is preferably composed of a material that is detectable subcutaneously, and most preferably is radiopaque.

The size and shape of the various elements of support assembly 10 may vary depending on the desired application. In the application depicted in Figures 1 to 4, tube 16 has a 0.055 inch outer diameter and lumen 22 has a 0.045 inch diameter. (See, e.g., Figure 2). At base portion 18, body 12 has a 0.065 inch outer diameter. (See, e.g., Figure 3). Body 12 is approximately 1 foot in length including approximately 1 inch of base portion 18 and approximately 0.1 inch of funnel portion 26. Soft tip 28 is arranged to extend coaxially from distal end 24 for

about 0.08 inch, and marker band 30 is approximately 0.055 inch inner diameter by 0.060 inch outer diameter by 0.080 inch long. Wire 14 is 0.020 inch diameter stainless steel, and is generally at least about 50 inches long and preferably about 53 inches long (See, e.g., Figures 1 and 4.) These sizes generally are suitable for existing PTCA catheters, such as the INTEGRA™ catheter marketed by Datascope Corp., the assignee of the present invention. Of course, other sizes may be used for other applications. As noted, these sizes may vary depending upon the application to which the device is to be put. When it is to be used with a PTCA catheter, lumen 22 should be at least large enough to permit passage therethrough of the deflated PTCA balloon. For example, Figure 5 is a side schematic view of the support assembly 10 of Figures 1 to 4 and a PTCA catheter 40, with the deflated balloon 48 resident in lumen 22 thereof. It is also believed to be preferable for body 12 to be at least long enough for the entire PTCA balloon 48 to fit therein, although a somewhat longer body, perhaps about 58 times as long as the balloon 48 is believed most desirable.

Referring now to Figures 6A to 6C, in one procedure for using the present invention, a physician inserts a guide catheter 38 through the aorta 37 and into a patient's coronary ostia 39 using known medical procedures.

The physician then slides a PTCA catheter 40 through the body 12 until the distal tip 46 of the catheter reaches soft tip 28. (See, e.g., Figure 5.) The balloon 48 of PTCA catheter 40 will then be captured within the confines of body 12. In this arrangement, the relatively fragile PTCA catheter balloon 48 will be safely surrounded by the more durable body 12 during insertion and maneuvering through the guide catheter 38 and vascular system.

Referring specifically to Figure 6A, the PTCA catheter/support catheter assembly combination then is fed

into guide catheter 38, and advanced through guide catheter 38 to the distal end thereof. Feeding most effectively is accomplished by exerting axial force on wire 14 and on catheter tube 50 simultaneously.

Referring specifically to Figure 6B, when the PTCA catheter/support catheter assembly combination reaches the distal end of guide catheter 38, it may be advanced as a unit out of the distal end of guide catheter 38, into the coronary ostia 39. Alternatively, support assembly 10 can be advanced first, followed by PTCA catheter 40. Even if, in doing so, PTCA catheter 40 comes out of the proximal end of body 12, funnel portion 26 facilitates reinsertion.

It will be appreciated that body 12 generally will be able to pass further through the coronary ostia than can guide catheter 38 because it is smaller and more maneuverable. Thug, body 12 may be inserted through the ostia and into the coronary artery (gee Figure 14). Even where body 12 cannot reach all the way to a stenotic region which must be opened, e.g., stenosis B in Figures 6A to 6C, it will more often than not be able to reach closer to it than can guide catheter 38.

When extending beyond the distal end of guide catheter 38, body 12 functions as a guide catheter extension, and the gap that PTCA catheter must negotiate without assistance is made much shorter. It will be appreciated that this procedure protects the fragile balloon 48 of the PTCA catheter 40 and lessens considerably the tendency of the PTCA catheter 40 to bend, buckle or kink.

In the above procedure, it generally will be preferable that at least some portion of proximal end of body 12 remains within guide catheter 38. To help ensure that proximal end 20 does not unintentionally exit from the guide catheter, the guide catheter may be provided with a marker ring 42 at its distal end. Marker ring 42

preferably is composed of the game radiopaque 30 material as marker band 30 and marker band 32, go that a physician can monitor the relative movement between body 12 and guide catheter 38.

Alternatively, or in addition, guide catheter 38 may be provided with a radially inwardly formed annular ridge 44 for impeding further axial movement of funnel 26 beyond the distal end of guide catheter 38. Of course, since both funnel portion 26 and annular ridge 44 preferably are deformable, should it be necessary to have body 12 pass completely out of guide catheter 38, that can easily be accomplished. However, because the outward flare of funnel 26 and the inwardly extending ridge 44, that is unlikely to occur accidentally.

As shown in Figure 6C, after body 12 is positioned adjacent the restricted area, PTCA catheter 40 is advanced so that the balloon 48 exits body 12 and is advanced into the restricted area, e.g., stenosis B, to be opened. Balloon 4a then is inflated, as represented by dotted lines 48', to effect a well known angioplasty 15 procedure. The balloon 48 then is deflated and the PTCA catheter 40, support catheter assembly 10 and guiding catheter 38 may be withdrawn, individually or in combination.

Figure 7 illustrates schematically another procedure in which body 12 is not long enough to reach from the guide catheter to the site where angioplasty is to be performed, e.g., stenosis B. In this case, the bridge body 12/PTCA catheter assembly may be passed completely out of guide catheter 38 and advanced as a unit to the site of the restriction, stenosis B. Angioplasty then may be performed as described above, by passing the PTCA catheter 40 out of the distal end 24 of body 12 into the restriction formed by stenosis B.

Figures 8A to 8C illustrate schematically another procedure for using the present invention, wherein body 12

is used for sequentially reinforcing and advancing a PTCA catheter to two or more stenotic regions. Referring specifically to Figure 8A, the body/PTCA catheter assembly is advanced to a first restriction site, e.g., stenosis A. PTCA catheter 40 is advanced so that balloon 48 exits the bridge body 12 into the restricted area of stenosis A, and balloon 48 is inflated, as represented by dashed lines 48'. As is well known in the art, inflation of balloon 48 compresses the stenotic walls to increase the size of the lumen therethrough, e.g., to enlarge the cross-section thereof. Balloon 48 then is deflated and PTCA catheter 40 may be advanced to the next restriction site, e.g., stenosis B. As shown in Figure 8B, the PTCA catheter 40 then is advanced 90 that balloon 48 is resident in the restricted area of stenosis B, and balloon 48 again is inflated, as represented by dashed lines 48', to open the restricted area. Of course, after each angioplasty procedure the balloon 48 is deflated so that the PTCA catheter 40 may be advanced. Alternatively, when the balloon 48 is deflated, the mini guide catheter (body 12) may be advanced over the collapsed balloon 48, and then the mini guide catheter/PTCA catheter assembly may be advanced as a single unit. This latter procedure provides protection to the relatively fragile balloon 48 and helps prevent bending, buckling or kinking of the PTCA catheter tube 50 as the PTCA catheter 40 is manipulated through the lesion.

After angioplasty is performed, body 12 may be positioned and retained in the previously restricted stenotic region. For example, Figure 8B illustrates a procedure wherein body 12 is advanced to reside in the newly enlarged lumen of stenosis A, while the PTCA catheter is advanced to a second restriction site, stenosis B. Figure 8C illustrates a procedure wherein body 12 is advanced to reside both in the passage opened at stenosis

A and the passage subsequently opened at stenosis B, and wherein the PTCA catheter has been withdrawn. In this fashion, body 12 functions as a stent to prevent restenosis of the previously restricted areas, and to maintain an unrestricted flow passage therethrough, e.g., to ensure adequate perfusion of the artery preparatory to surgery.

In yet another procedure for using the present invention, support catheter assembly 10 may be used to facilitate the exchange of one PTCA catheter for another, e.g., for one of a different inflation diameter. In this procedure, a first PTCA catheter is advanced through a patient's vascular system to perform angioplasty using known procedures. When the physician wishes to exchange the first PTCA catheter for a second one, body 12 may be inserted and advanced through the guide catheter and to the newly opened stenosis. The deflated balloon 48 of the first PTCA catheter 40 then may be withdrawn, through body 12, until it exits from guide catheter 38, leaving both the guide catheter and the support catheter assembly in place. The second PTCA catheter then can be inserted. Because of funnel portion 26, the second catheter can negotiate the transition from guide catheter 38 into body 12.

Referring again to Figure 1, it also may be desirable to provide perforations 64 (shown in phantom) in tube 16 of body 12. Such perforations would facilitate fluid flow through the area by providing greater influx and afflux through lumen 22. This structure also would provide influx and afflux through the wall of body 12 thereby to provide access for blood or other fluids to the cells of the coronary vessel wall or to the plaque formed thereon.

As described in detail above, support catheter assembly 10 may be provided with markers, e.g., radiopaque markers, for subcutaneously detecting the position of body 12 during a medical procedure. Each of the guide catheter 38 and the PTCA catheter 40 also may be provided with one

or more markers. Thus, it will be appreciated that a physician, through use of fluoroscopy or some similar technique, will be able to detect both the actual and relative locations of the various devices. More specifically, it will be appreciated that the physician will be able to detect, for example, when a PTCA catheter balloon 48 is captured by, or has fully exited from, body 12.

Although the procedure described above contemplates assembling body 12 and PTCA catheter 40 as a unit before passing them together into guide catheter 38, such preassembly is not necessary. Body 12 could be inserted first, followed by the PTCA catheter 40. As discussed above, funnel portion 26 facilitates passage of the PTCA catheter 40 from the guide catheter 38 into lumen 22 of body 12.

Alternatively, in another procedure the physician may prefer to insert the PTCA catheter 40 first, and use support catheter assembly 10 only when the need for it arises. This may occur, for example, where the physician has inserted a PTCA catheter alone through the guide catheter, only to find that the PTCA catheter cannot negotiate the ostia and coronary artery between the distal end of the guide catheter and the restricted stenotic region. In this case, it may be desirable to provide PTCA catheter 40 with a removable Y-fitting at its proximal end to permit passing body 12 over the PTCA catheter 40 after the latter has been advanced into the guide catheter. Copending U.S. Application Serial No. 07/743,189 discloses a detachable/reattachable Y-fitting that could be used for this purpose. It will be appreciated that when the Y--fitting is detached, body 12 of the present embodiment will pass easily over the proximal end of PTCA catheter tube 50. The Y-fitting then may be re-attached, and body 12 may be passed down through the guide catheter 38 with the PTCA

catheter tube 50 functioning as a guide wire for the body 12.

Although it is believed that the support assembly of the instant invention is most advantageously used in connection with a guide catheter, it may also be used independently. Referring to Figure 9, the body 12 and PTCA catheter 40 could be assembled as a unit and fed directly into the artery, either percutaneously or by an incision therein. Together, this assembly would then be advanced through the vascular system until it reaches a lesion L, with body 12 acting as a reinforcement to prevent buckling, kinking or bending of the distal end of the catheter.

Figures 10 to 13 illustrate another embodiment of a support assembly in accordance with the present invention. Referring to Figure 10, a support assembly 110 is shown cut away in longitudinal cross-section. As in the prior embodiment, support assembly 110 is composed of two major elements: a body 112; and insertion/manipulation means. In this embodiment, the insertion/manipulation means takes the form of a manipulating extension tube. As in the prior embodiment, body 112 includes a body tube 116, a base portion 118 at the proximal end 120 thereof, and a lumen 122 extending therethrough from the proximal end 120 to the distal end 124. Body 112 also may include a soft tip 128 and distal marker band 130, as described in the prior embodiment.

As shown in Figures 10 to 13, tube 116 and lumen 122 are generally cylindrical and coaxial along the length of body 112, from proximal end 120 to distal end 124. Body tube 116 is dissimilar to tube 16 of the prior embodiment in that there is no enlarged wall section or flared out funnel at proximal end 120. Instead, base portion 118 is symmetrical about its axis, not eccentric. This symmetrical, generally cylindrical arrangement has a compact structure that, in some circumstances, may provide

improved clearance through restricted areas in a blood vessel.

Extension tube 114 extends coaxially from the proximal end 120 of body 112. Extension tube 114 has a proximal end 152, a distal end 154 and a lumen 156 extending therethrough from the proximal end 152 to the distal end 154. As shown in Figures 11 and 12, extension tube 114 preferably has the same general cross-section as body tube 116. However, as shown in Figures 10 and 12, extension tube 114 also may be provided with a longitudinal slit 158 extending from the proximal end 152 to head portion 160. Referring to Figures 10 and 13, extension tube 114 also may be provided with a funnel 162 at its proximal end 152 for facilitating insertion of a catheter, e.g., a PTCA balloon catheter.

As shown in Figure 10, body tube 116 and extension tube 114 may be joined by a connecting member 125. Connecting member 125 may be an annular ring, and a marker member 127 may be provided therein, similar to marker band 130 in soft tip 128. Alternatively, the proximal end 120 of body tube 116 and the distal end 154 of extension tube 114 could be adhesively bonded.

Other means for connecting the two will be readily apparent to those skilled in the art. The length of the extension tube generally is selected that the proximal end thereof will remain outside the proximal end of the guide catheter at all times, and therefore may vary depending on the application. In the embodiment shown in Figures 11 to 13, extension tube 114 preferably is generally at least about 50 inches long and preferably at least about 53 inches long, and about 0.055 inches in diameter. Preferably, slit 158 is about 45 inches long and 0.005 inches wide.

Those skilled in the art will readily be able to select the correct sizing for any given procedure. The

procedures for using the embodiment of Figures 10 to 13 generally are the same as the above-described procedures for using the embodiment of Figures 1 to 4. In each respective case, the manipulating means (wire 14 or tube 114) provides structure for inserting, manipulating, advancing and withdrawing the body portion (12, 112). In the latter embodiment, the extension tube 114 also provides a funnel portion 162 for facilitating insertion of a catheter therethrough. Thus, this embodiment may provide particular utility where the physician knows it will be necessary to use several catheters sequentially, e.g., several PTCA 20 balloon catheters having different inflation sizes. Specifically, since the physician has the entry to the bridge tube 116 (i.e., proximal end 152) in hand, it is not necessary to search for it near the distal end 24 of the guide catheter 38.

As noted above, extension tube 114 is provided with a slit 158 extending longitudinally from the proximal end 152 to head portion 160. The slit 152 allows the physician to use the assembly 110 with a catheter that 30 has already been inserted, without first removing the catheter. For example, when used with the above-noted Y-fitted PTCA catheter disclosed in co-pending U.S. Application Serial No. 07/743,189, the physician may insert the PTCA catheter through the guide catheter 38 and, if unsuccessful in attempting to pass it unaided into a restriction, the detachable fitting or adaptor can be removed. Assembly 110 then can be passed over the PTCA catheter tube 50 until the proximal end of the PTCA catheter passes through body 112 and head portion 160 of extension tube 114, and reaches slit 158. The proximal end of the PTCA catheter tube 50 then is passed out through the slit 158 and is held in place by the physician. It will be appreciated that the physician then can advance the assembly 110 by pushing on the extension tube 114 while progressively pressing

catheter tube 50 through slit 158 into lumen 122. In this procedure, the physician maintains control over the PTCA catheter at all times.

Of course, the device of the present invention may be used with almost any type of catheter, including over-the-wire catheters as well as catheters with captive guide wires. It will be appreciated that the above described embodiments and procedures are illustrative only. Numerous other features, advantages, equivalent structures, procedures and modifications of the present invention readily will come to mind among those skilled in the art. Accordingly, the present invention is not limited to the above-described embodiments, but is intended to include all structures and procedures that come within the scope of the following claims, and all equivalents thereto.

What is claimed is:

Claims:

1. A support catheter device for use in a medical procedure to be performed at an internal site within the body of a patient, he device comprising:

a tubular body having a base portion disposed at a proximal end thereof, and having a continuous lumen therethrough from a proximal end to a distal end thereof, said lumen having a cross-section and a length; and a manipulating member connected to said body and extending proximally therefrom for facilitating insertion of said body to the internal site.

2. A device as recited in Claim 1, wherein said tubular body is generally cylindrical and said continuous lumen has a circular cross-section.

3. A device as recited in Claim 1, wherein the base portion of said body has an eccentric cross-section.

4. A device as recited in Claim 1, wherein the base portion of said body has a funnel shaped opening at the proximal end of said body.

5. A device as recited in Claim 1, wherein the base portion of said body has an eccentric cross-section and a funnel shaped opening at the proximal end of said body.

6. A device as recited in Claim 1, wherein said manipulating member is a wire.

7. A device as recited in Claim 6, wherein said wire is connected to the base portion of said body.

8. A device as recited in Claim 3, wherein said manipulating member is a wire, and wherein said wire is connected to the base portion of said body.

9. A device as recited in Claim 4, wherein said manipulating member is a wire, and wherein said wire is connected to the base portion of said body.

10. A device as recited in Claim 5, wherein said manipulating member is a wire, and wherein said wire is connected to the base portion of said body.

11. A device as recited in Claim 1, wherein said body is composed of a plastic material.

12. A device as recited in Claim 1, wherein said body is formed of a molded plastic.

13. A device as recited in Claim 12, wherein said manipulating member is a wire, and wherein said wire is connected to said body by molding said wire therein.

14. A device as recited in Claim 1, wherein said body is designed for use with a balloon catheter and wherein the cross-section of said lumen is large enough to permit passage therethrough of a balloon of said balloon catheter.

15. A device as recited in Claim 14, wherein said lumen length is at least as long as the length of said balloon.

16. A device as recited in Claim 15, wherein said lumen length is at least 8 times as long as the length of said balloon.

17. A device as recited in Claim 1, wherein said manipulating member is at least about four times as long as said body.

18. A device as recited in Claim 1, wherein said body is at least about 12 inches long.

19. A device as recited in Claim 17, wherein said body is at least about 12 inches long.

20. A device as recited in Claim 1, wherein said manipulating member is at least about 50 inches long.

21. A device as recited in Claim 17, wherein said manipulating member is at least about 50 inches long.

22. A device as recited in Claim 1, further comprising a tip member disposed at the distal end of said body.

23. A device as recited in Claim 22, wherein said tip member is soft and flexible.

24. A device as recited in Claim 23, wherein said tip member is composed of a copolymer of polyethylene and ethylvinylalcohol.

25. A device as recited in Claim 1, further comprising marker means for detecting the location of said body during the medical procedure.

26. A device as recited in Claim 25, wherein said marker means includes a marker disposed at the distal end of said body.

27. A device as recited in Claim 25, wherein said marker means includes a marker disposed at the proximal end of said body.

28. A device as recited in Claim 25, wherein said marker means includes a marker disposed on said manipulating member adjacent the proximal end of said body.

29. A device as recited in Claim 25, wherein said marker means includes a first marker disposed at the distal end of said body and a second marker disposed on said manipulating member adjacent said body.

30. A device as recited in Claim 25, wherein said marker means is radiopaque.

31. A device as recited in Claim 1, wherein said body has perforations for providing influx and afflux of fluids.

32. The device as recited in Claim 1, wherein said manipulating member is an extension tube, said extension tube having a continuous lumen therethrough from a proximal end to a distal end thereof and in communication with the lumen of said tubular body.

33. The device as recited in Claim 32, wherein said extension tube has a longitudinal slit formed in a wall thereof.

34. The device recited in Claim 33, wherein the slit extends longitudinally from the proximal end to a head portion at the distal end of said extension tube.

35. The device recited in Claim 32, wherein said extension tube includes an enlarged opening at the proximal end thereof.

36. The device as recited in Claim 35, wherein the enlarged opening is funnel-shaped.

37. The device as recited in Claim 32, wherein said extension tube is formed of a plastic material.

38. The device as recited in Claim 32, wherein said extension tube is formed of a copolymer of polyethylene and ethylvinylalcohol.

39. The device as recited in Claim 32, further comprising radiopaque marker means disposed at the distal end of said device.

40. The device as recited in Claim 38, further comprising marker means disposed at the distal end of said extension tube.

41. The device as recited in Claim 32, further comprising radiopaque marker means disposed in the region where said extension tube is connected to said body.

42. A system for facilitating a medical procedure at an internal site, the system comprising:

a support catheter device including a tubular body and a manipulating member, said body having a base portion disposed at a proximal end thereof, and a continuous lumen

therethrough from the proximal end to a distal end thereof, and said manipulating member being connected to said body and extending proximally therefrom; and a guide catheter having a continuous lumen therethrough from a proximal end to a distal end thereof, said guide catheter having a cross-section and a length sized to provide sliding access therethrough for said support catheter device, wherein said manipulating member facilitates insertion of said tubular body through said guide catheter to the internal site.

43. A system for facilitating a medical procedure including insertion of a balloon catheter to an internal site, the system comprising:

a support catheter device including a tubular body and a manipulating member, said body having a base portion disposed at a proximal end thereof, and a continuous lumen therethrough from a proximal end to a distal end thereof, said tubular body lumen having a cross-section sized for slidably receiving the balloon catheter, and said manipulating member being connected to said body and extending proximally therefrom; and

a guide catheter having a continuous lumen therethrough from a proximal end to a distal end thereof, said guide catheter lumen having a cross-section and a length, the cross-section being sized to provide sliding access therethrough for said support catheter device, wherein said manipulating member facilitates insertion of said tubular body and balloon catheter through said guide catheter and to the internal site.

44. A system as recited in Claim 43, further comprising means for indicating when the distal end of said tubular body reaches the distal end of said guide catheter.

45. A system as recited in Claim 44, wherein said indicating means includes first radiopaque marker means disposed on the distal end of said support catheter device and second radiopaque marker means disposed on the distal end of said guide catheter.

46. A system as recited in Claim 42, further comprising means for indicating when the proximal end of said tubular body reaches the distal end of said guide catheter.

47. A system as recited in Claim 46, wherein said indicating means includes first radiopaque marker means disposed on the proximal end of said tubular body and second radiopaque marker means disposed on the distal end of said guide catheter.

48. A system as recited in Claim 46, further comprising means for inhibiting passage of the proximal end of said tubular body out of the distal end of said guide catheter.

49. A system as recited in Claim 46, wherein the proximal end of said tubular body can be advanced out of the distal end of said guide catheter.

50. A system as recited in Claim 48, wherein said inhibiting means includes said indicating means and wherein said indicating means includes an annular ridge formed at the distal end of said guide catheter, said ridge being substantially coaxial with the lumen of said guide catheter and extending radially inward.

51. A system for performing a medical procedure, the system comprising:

a balloon catheter having a balloon;

a support catheter device including a tubular body and a manipulating member, said body having a base portion disposed at a proximal end thereof, and a continuous lumen therethrough from a proximal end to a distal end thereof, said tubular body lumen having a cross-section sized for slidably receiving the balloon catheter, and said manipulating member being connected to said tubular body and extending proximally therefrom; and

a guide catheter having a continuous lumen therethrough from a proximal end to a distal end thereof, said guide catheter lumen having a cross-section sized to provide sliding access therethrough for said support catheter device, wherein said manipulating member facilitates insertion of said tubular body and balloon catheter through said guide catheter and to the internal site.

52. A system as recited in Claim 51, further comprising means for indicating when the distal end of said tubular body reaches the distal end of said guide catheter.

53. A system as recited in Claim 52, wherein said indicating means includes first radiopaque marker means disposed on the distal end of said tubular body and second radiopaque marker means disposed on the distal end of said guide catheter.

54. A system as recited in Claim 51, further comprising means for indicating when the proximal end of said tubular body reaches the distal end of said guide catheter.

55. A system as recited in Claim 54, wherein said indicating means includes first radiopaque marker means disposed on the proximal end of said tubular body and second radiopaque marker means disposed on the distal end of said guide catheter.

56. A system as recited in Claim 51, further comprising inhibiting means for inhibiting passage of the proximal end of said tubular body out of the distal end of said guide catheter.

57. A system as recited in Claim 54, wherein the proximal end of said tubular body can be advanced out of the distal end of said guide catheter.

58. A system as recited in Claim 54, wherein said indicating means includes an annular ridge formed at the distal end of said guide catheter, said ridge being substantially coaxial with the lumen of said guide catheter and extending radially inward.

59. A method for using the support catheter device recited in Claim 1, comprising the steps of:

placing said device into a blood vessel; advancing said device through the blood vessel to a selected site in the vessel; and leaving said device in the selected site to prevent stenosis of the vessel at that site.

60. A method for using the support catheter device recited in Claim 1 in conjunction with a balloon catheter, the method comprising the steps of:

placing a balloon portion of the balloon catheter within the lumen of said tubular body, and advancing the assembled support catheter device and balloon catheter through a lumen of a blood vessel of a patient.

61. The method recited in Claim 60, further comprising the step of:

advancing the balloon of the balloon catheter out of the distal end of said support catheter device into the lumen of the blood vessel.

62. The method recited in Claim 61, further comprising the steps of:

advancing the balloon of the balloon catheter into a restricted area of the lumen of the vessel; and inflating the balloon to enlarge a cross-section of the lumen of the vessel.

63. The method recited in Claim 62, further comprising the steps of:

deflating the balloon; and

withdrawing the balloon catheter from the blood vessel.

64. The method recited in Claim 62, further comprising the steps of:

deflating the balloon;

withdrawing the balloon catheter such that the balloon is resident in the lumen of said tubular body; and

withdrawing the assembled support catheter device and balloon catheter.

65. A method for using the support catheter device recited in Claim 1, in conjunction with a balloon catheter and a guide catheter, the guide catheter having a proximal end, a distal end and a lumen therethrough, the method including the steps of:

placing said guide catheter in a blood vessel of a patient;

placing the balloon of said balloon catheter in the lumen of said tubular body; and

advancing the assembled support catheter device and balloon catheter into the lumen of said guide catheter.

66. The method recited in Claim 65, further comprising the step of:

advancing the assembled support catheter device and balloon catheter to the distal end of said guide catheter.

67. The method recited in Claim 66, further comprising the step of:

advancing the assembled support catheter device and balloon catheter to at least partially exit the distal end of said guide catheter.

68. The method recited in Claim 67, further comprising the step of:

advancing the balloon of said balloon catheter to exit from said device.

69. The method recited in Claim 68, further comprising the step of:

advancing said balloon into a stenotic region.

70. The method recited in Claim 69, further comprising the step of:

inflating said balloon to enlarge a cross-section of the lumen through said stenotic region.

71. The method recited in Claim 70, further comprising the steps of:

deflating said balloon, and

withdrawing said balloon back into the lumen of said tubular body.

72. The method recited in Claim 70, further comprising the steps of:

deflating said balloon, and

withdrawing said support catheter device and said balloon catheter from said guide catheter.

73. The method recited in Claim 71, further comprising the steps of:

deflating said balloon,

withdrawing said balloon catheter from said patient,

feeding a second balloon catheter into the lumen of said guide catheter,

advancing said second balloon catheter through said guide catheter so that the balloon of said second balloon catheter enters the lumen of said tubular body,

advancing said second balloon catheter so that the balloon of said second balloon catheter exits from said tubular body, and

inflating the balloon of said second balloon catheter.

74. The method recited in Claim 73, further comprising the steps of:

deflating the balloon of said second balloon catheter, and

removing said second balloon catheter from the patient.

75. The method recited in Claim 70, further comprising the step of:

advancing said tubular body into the enlarged cross-section of the lumen in the stenotic region.

76. The method recited in Claim 75, further comprising the steps of:

withdrawing said balloon catheter and said guide catheter; and

leaving said support catheter device in situ.

77. A method for using the device recited in Claim 1, comprising the steps of:

percutaneously inserting a balloon catheter into a blood vessel of a patient, and

sliding said support catheter device down along said balloon catheter.

78. The method recited in Claim 77, further comprising the step of:

sliding said device down said balloon catheter until the balloon of said balloon catheter is within the lumen of said tubular body.

79. A method for using the system recited in Claim 51, comprising the steps of:

placing said guide catheter in a blood vessel of a patient;

placing the balloon of the balloon catheter in the lumen of said tubular body; and

advancing the assembled support catheter device and balloon catheter into the lumen of said guide catheter.

80. The method recited in Claim 79, further comprising the step of:

advancing the assembled support catheter device and balloon catheter to the distal end of said guide catheter.

81. The method recited in Claim 80, further comprising the step of:

advancing the assembled support catheter device and balloon catheter to at least partially exit the distal end of said guide catheter.

82. The method recited in Claim 81, further comprising the step of:

advancing the balloon of said balloon catheter to exit from said device.

83. The method recited in Claim 82, further comprising the step of:

advancing said balloon into a stenotic region.

84. The method recited in Claim 83, further comprising the step of:

inflating said balloon to enlarge a cross-section of the lumen through said stenotic region.

85. The method recited in Claim 84, further comprising the steps of:

deflating said balloon, and

withdrawing said balloon back into the lumen of said tubular body.

86. The method recited in Claim 84, further comprising the steps of:

deflating said balloon, and

withdrawing said bridge device and said balloon catheter from the blood vessel.

87. The method recited in Claim 85, further comprising the steps of:

deflating said balloon,

withdrawing said balloon catheter from said patient,

feeding a second balloon catheter into the lumen of said guide catheter,

advancing said second balloon catheter through said guide catheter so that the balloon of said second balloon catheter enters said tubular body,

advancing said second balloon catheter so that the balloon of said second balloon catheter exits from said tubular body, and

inflating the balloon of said second balloon catheter.

88. The method recited in Claim 87, further comprising the steps of:

deflating the balloon of said second balloon catheter, and

removing said second balloon catheter from the patient.

89. The method recited in Claim 84, further comprising the step of advancing the body of said support catheter device into the enlarged cross-section of the lumen in the stenotic region.

90. The method recited in Claim 88, further comprising the steps of:

withdrawing said balloon catheter and said guide catheter and leaving said support catheter device in situ.

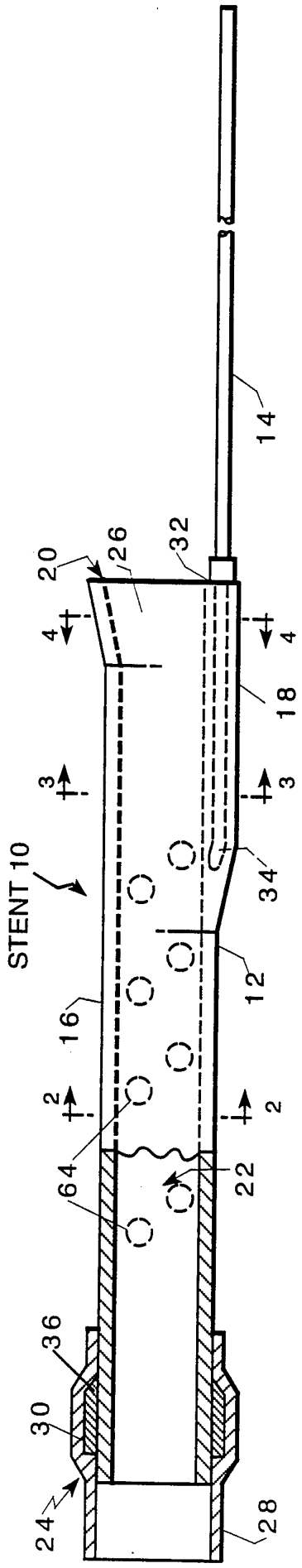


FIG. 1

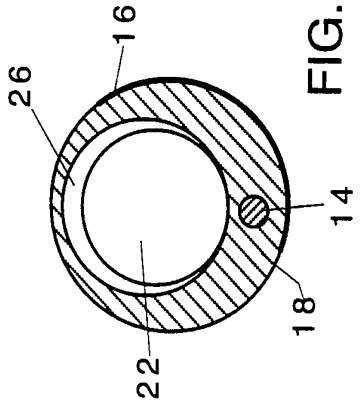


FIG. 4

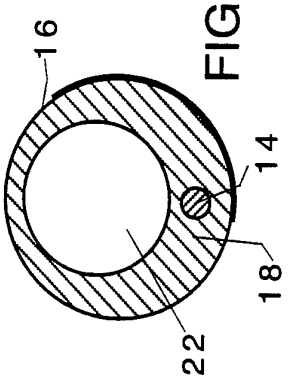


FIG. 3

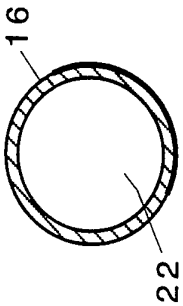


FIG. 2

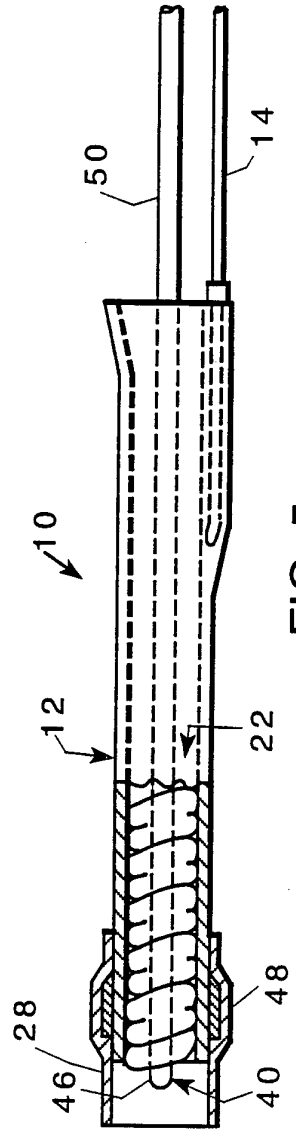


FIG. 5

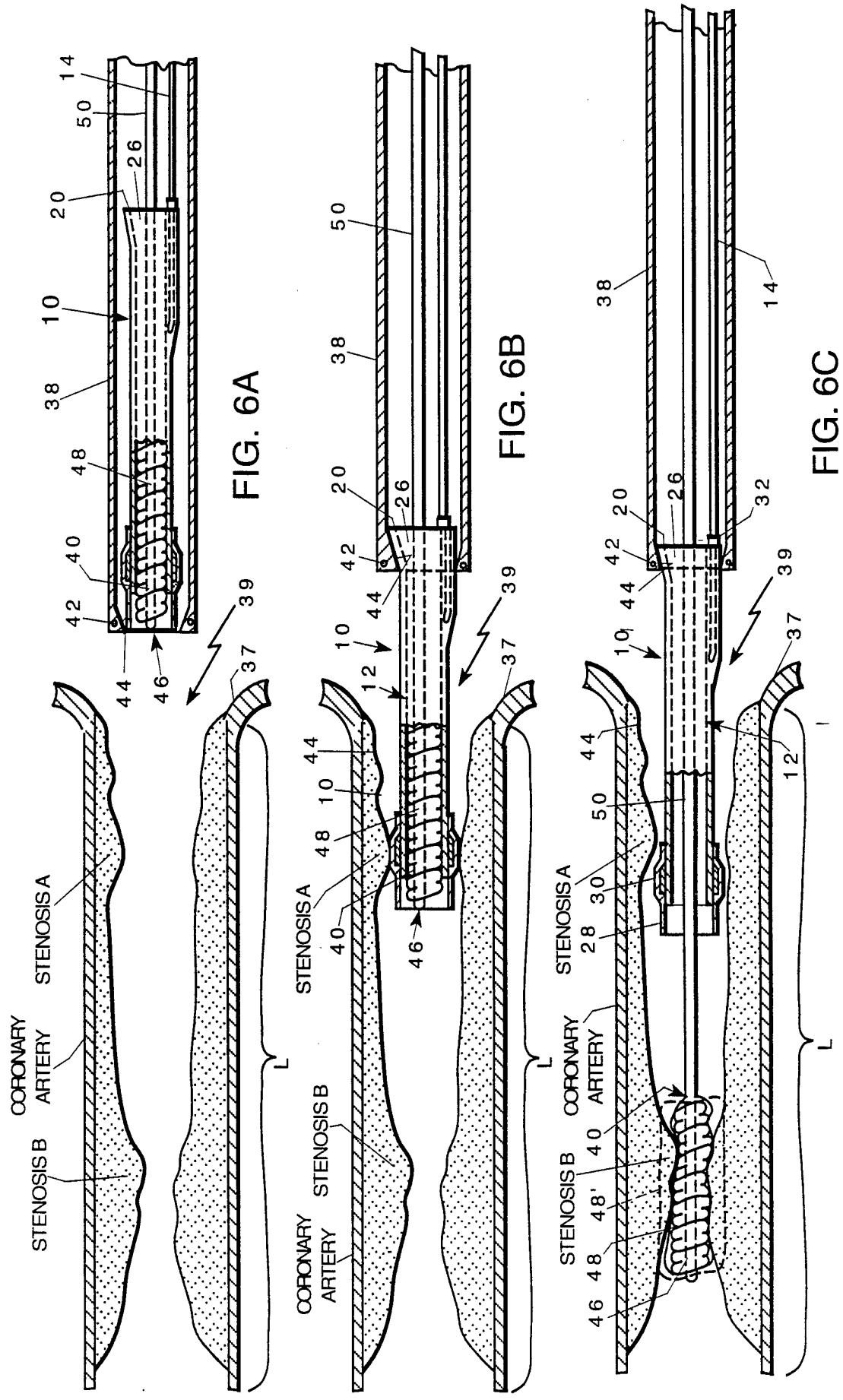


FIG. 6A

FIG. 6B

FIG. 6C

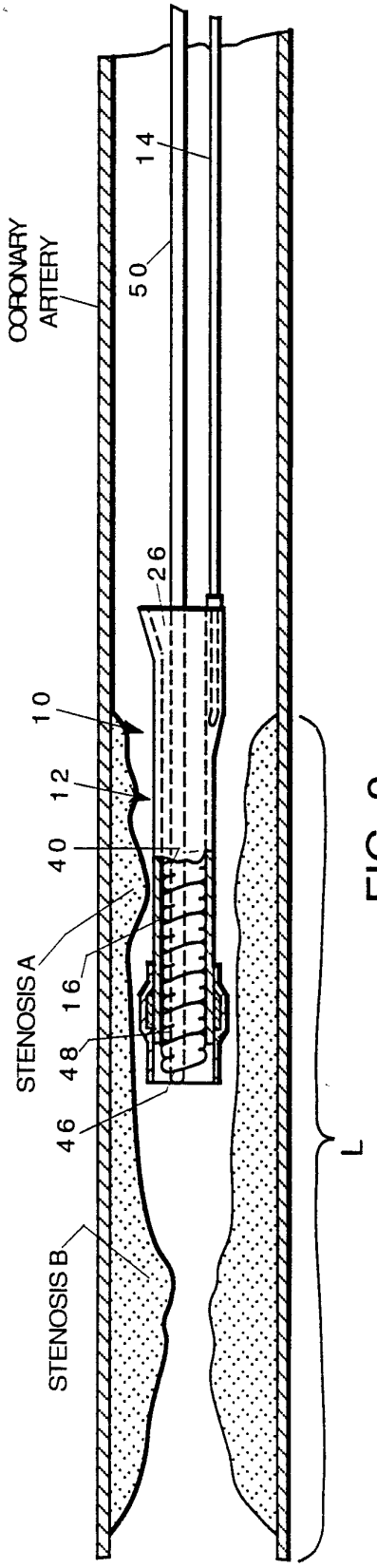
CORONARY ARTERY
14
50
26
10
12
40
16
48
46
STENOSIS A
STENOSIS B
L

FIG. 9

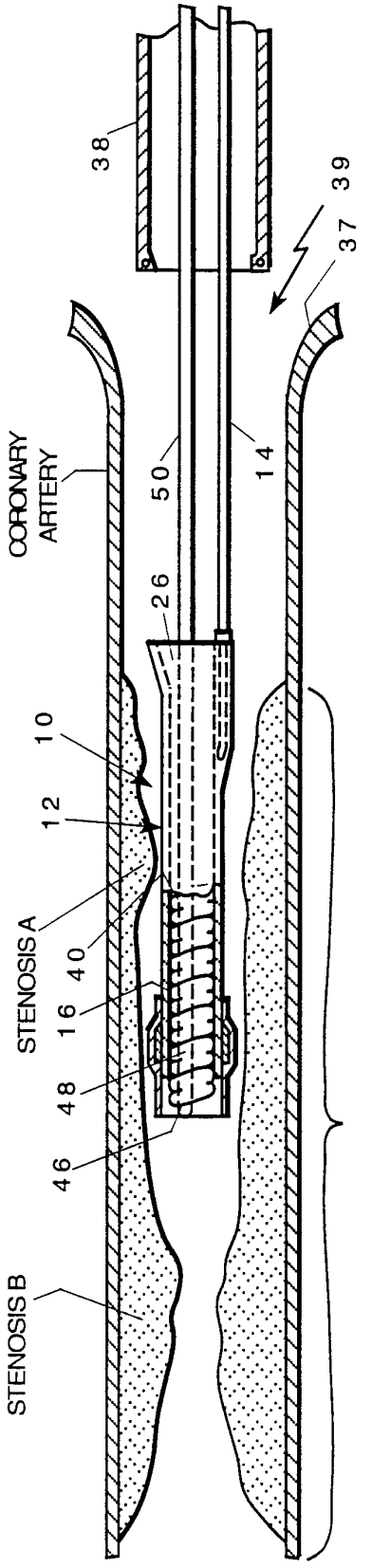
38
39
37
CORONARY ARTERY
14
50
26
10
12
40
16
48
46
STENOSIS A
STENOSIS B
L

FIG. 7

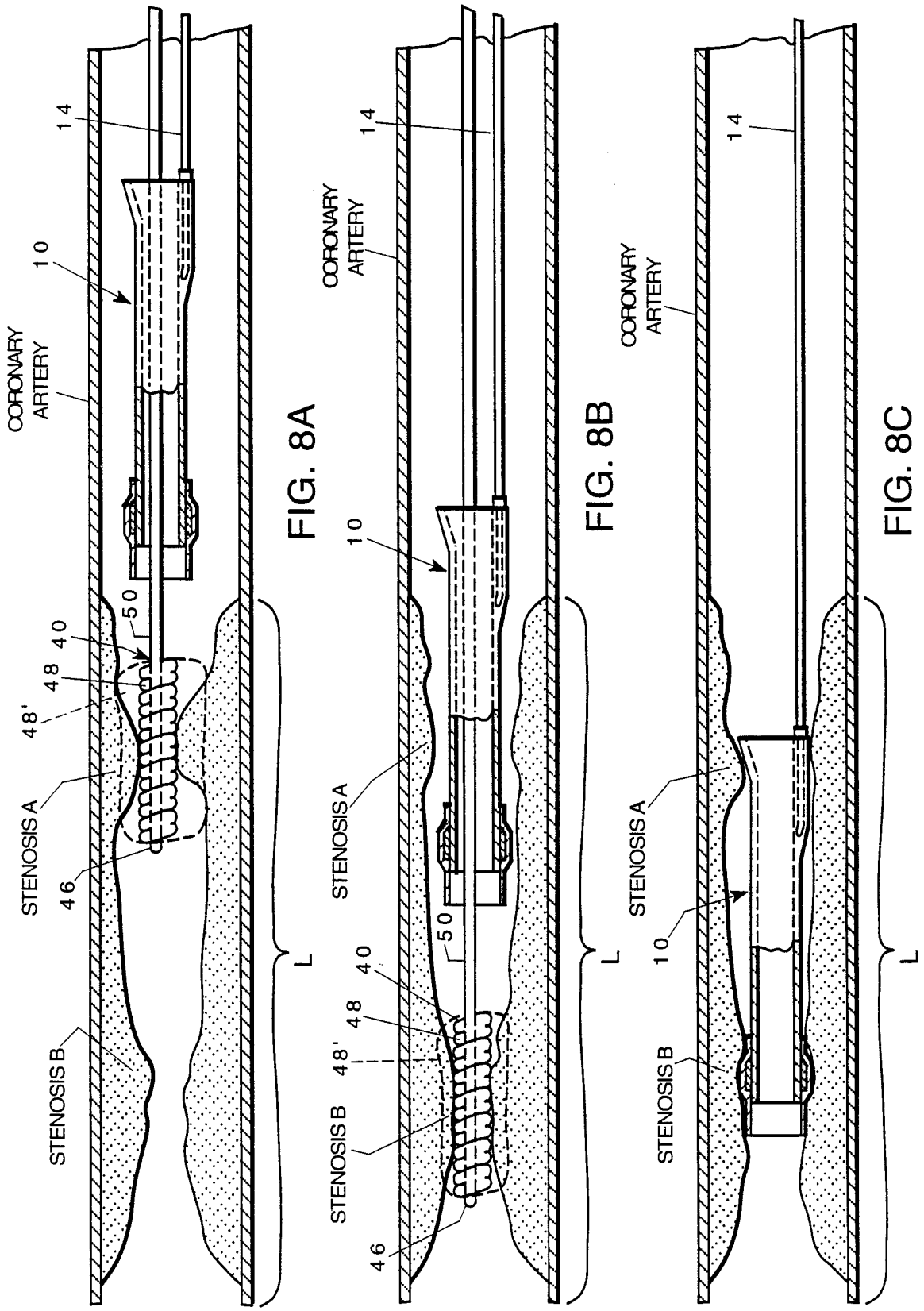
14
10
CORONARY ARTERY
50
40
48
48'
STENOSIS A
46
STENOSIS B
L
FIG. 8A
FIG. 8B
FIG. 8C

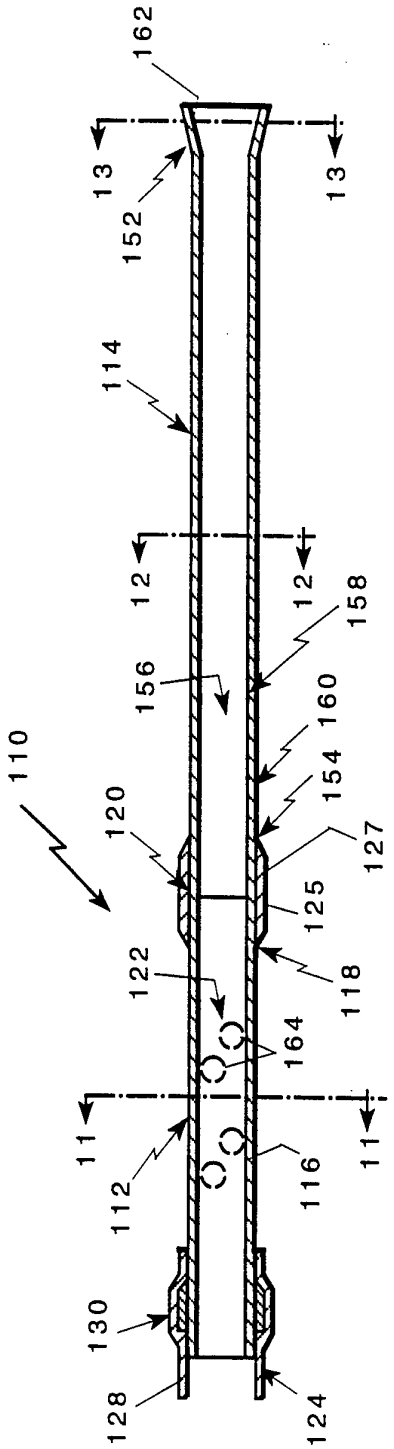


FIG. 10

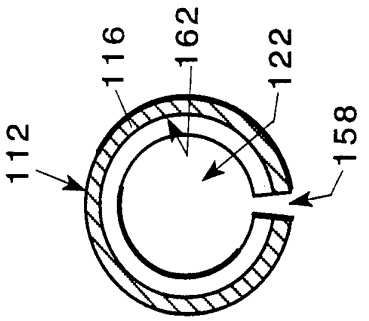


FIG. 13

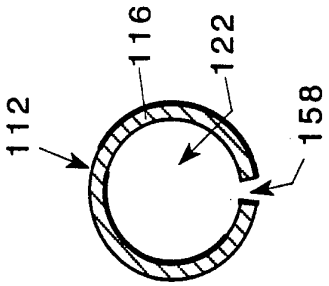


FIG. 12

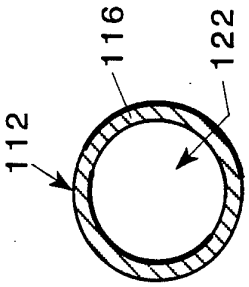


FIG. 11

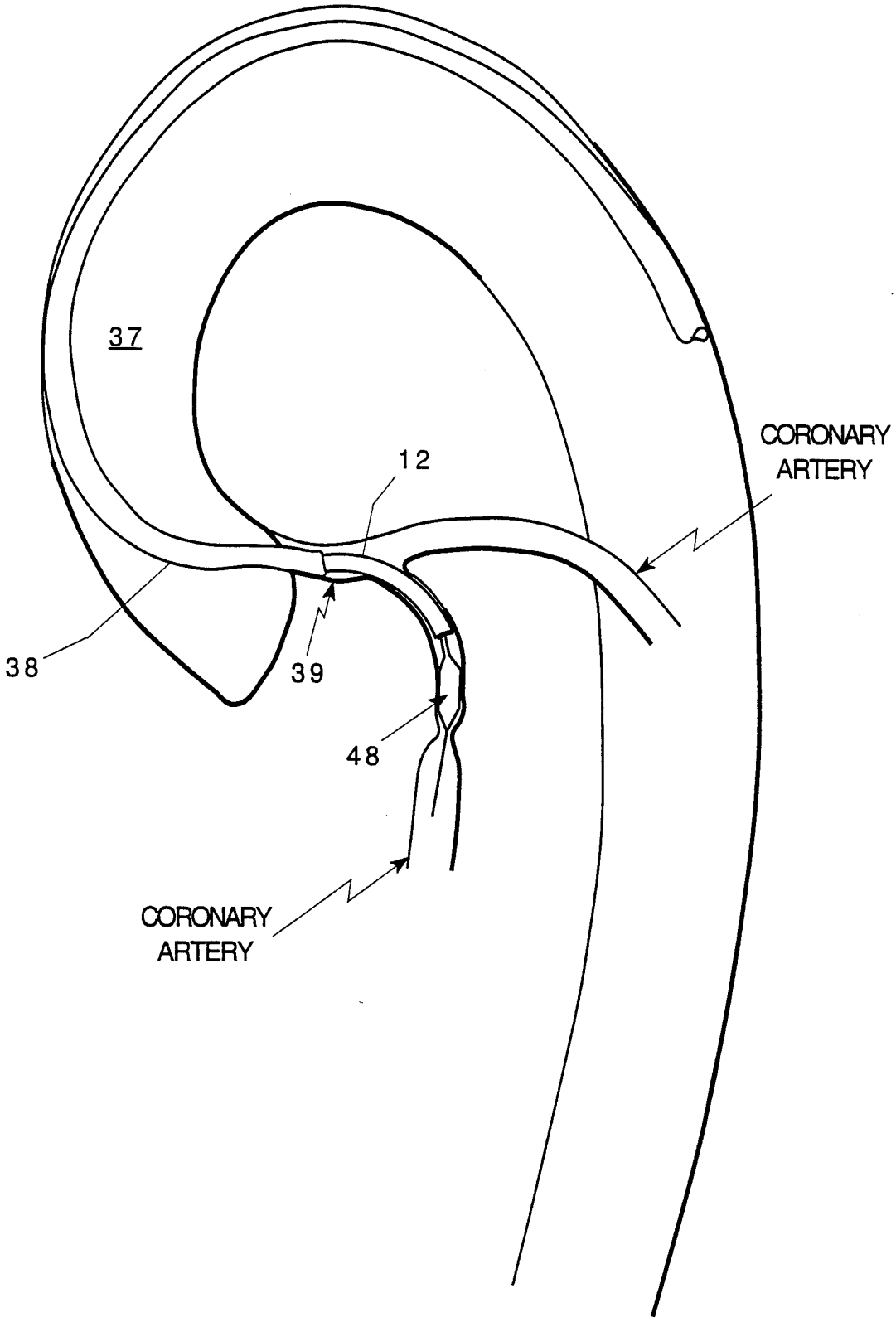


FIGURE 14

# INTERNATIONAL SEARCH REPORT

International application No.
PCT/US93/07337

**A. CLASSIFICATION OF SUBJECT MATTER**

IPC(5) :A61M 29/00
US CL :604/96

According to International Patent Classification (IPC) or to both national classification and IPC

**B. FIELDS SEARCHED**

Minimum documentation searched (classification system followed by classification symbols)

U.S. : 604/96, 104,164, 170-172; 623/1; 606/193-195; 128/658

Documentation searched other than minimum documentation to the extent that such documents are included in the fields searched

Electronic data base consulted during the international search (name of data base and, where practicable, search terms used)

**C. DOCUMENTS CONSIDERED TO BE RELEVANT**

| Category* | Citation of document, with indication, where appropriate, of the relevant passages | Relevant to claim No. |
|---|---|---|
| P,X | US, A 5, 183, 464 (Dubrul et al) 02 February 1993 (see entire document. | 1-5, 11, 12 |
| P,X | US, A, 5, 192, 307 (Wall) 09 March 1993 (see entire document). | 1, 2, 6, 7, 11-15, 17, 31 |
| Y | US, A, 4, 893, 623 (Rosenbluth) 16 January 1990 (see entire document). | 22-24 |
| Y | US, A 4, 279, 252 (Martin) 21 July 1981 (see entire document). | 25-27, 30 |
| Y | US, A, 3, 605, 750 (Sheridan et al.) 20 September 1971 (see entire document). | 25-27, 30 |

☐ Further documents are listed in the continuation of Box C. ☐ See patent family annex.

| | | | |
|---|---|---|---|
| * | Special categories of cited documents: | "T" | later document published after the international filing date or priority date and not in conflict with the application but cited to understand the principle or theory underlying the invention |
| "A" | document defining the general state of the art which is not considered to be part of particular relevance | "X" | document of particular relevance; the claimed invention cannot be considered novel or cannot be considered to involve an inventive step when the document is taken alone |
| "E" | earlier document published on or after the international filing date | "Y" | document of particular relevance; the claimed invention cannot be considered to involve an inventive step when the document is combined with one or more other such documents, such combination being obvious to a person skilled in the art |
| "L" | document which may throw doubts on priority claim(s) or which is cited to establish the publication date of another citation or other special reason (as specified) | "&" | document member of the same patent family |
| "O" | document referring to an oral disclosure, use, exhibition or other means | | |
| "P" | document published prior to the international filing date but later than the priority date claimed | | |

| | |
|---|---|
| Date of the actual completion of the international search<br>22 September 1993 | Date of mailing of the international search report<br>16 DEC 1993 |
| Name and mailing address of the ISA/US<br>Commissioner of Patents and Trademarks<br>Box PCT<br>Washington, D.C. 20231<br>Facsimile No. NOT APPLICABLE | Authorized officer<br>John Yasko<br>Telephone No. (703) 308-2986 |

Form PCT/ISA/210 (second sheet)(July 1992)*