Nov. 16, 1965 W. T. GEORGE 3,217,917

CONNECTOR

Filed Dec. 6, 1962

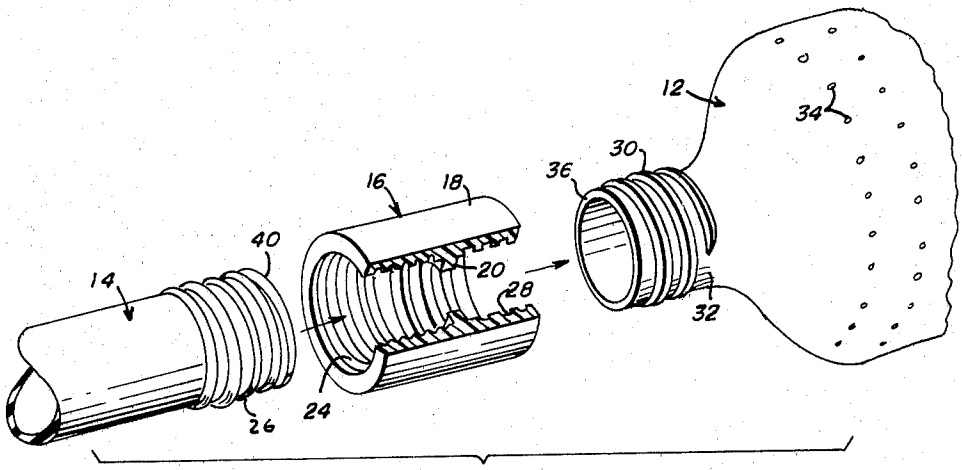

FIG. 1

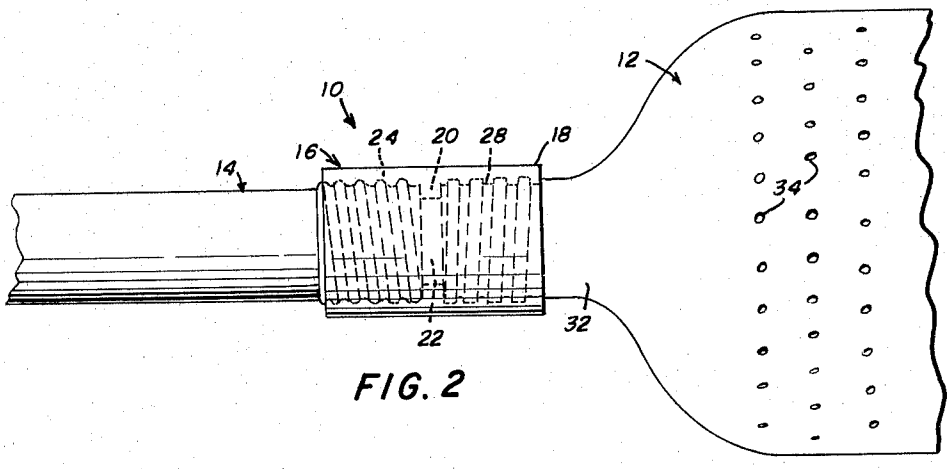

FIG. 2

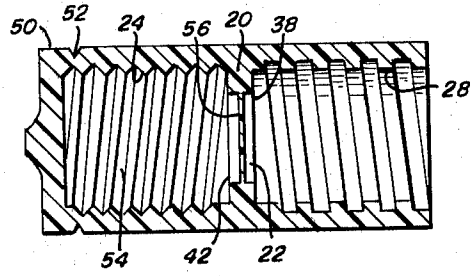

FIG. 3

INVENTOR
WARREN T. GEORGE
BY John J. Byrne
ATTORNEY

United States Patent Office 3,217,917 Patented Nov. 16, 1965

3,217,917

CONNECTOR

Warren T. George, 1611 Clark Ave., Billings, Mont.

Filed Dec. 6, 1962, Ser. No. 242,875
1 Claim. (Cl. 215—100)

This invention relates to a connector, and particularly relates to a connector which aids in transforming a disposable plastic container into a water sprinkler.

With the advent of inexpensive plastic bottles having large capacity and improved construction, the housewife is somewhat apprehensive about the discarding of such containers after only one use. Therefore, a principal objective of this invention is to enable a user of such containers to convert it to an extremely usable water sprinkler.

Water sprinklers in the average suburban community are most often used in areas where children are likely to recreate. Indeed, the sprinkler itself oftentimes is the object of play itself. The conventional market place sprinkler for the most part will operate only for short periods of time when subjected to such play.

Another very important objective of this invention is to provide a sprinkler made from an item normally discarded after its contents have been used.

A still further objective of the invention is to provide a plastic connector having an interior flange that functions as a washer seal for both the end of the fluid delivering conduit and the end of the container neck.

Another important objective is to provide a combined cap-connector which is marketed with the plastic bottle as a closure member, and converted to a conduit connector after the original purpose of the member has been accomplished.

Another objective of the invention is to provide a water sprinkler which permits the user thereof to select the type water spray he desires for the particular type watering that he desires.

These and other important objectives and advantages of the invention will be more fully understood upon a reading of the following specifications taken in view of the attached drawings, wherein:

FIGURE 1 is an exploded perspective view of the elements of this invention prior to their assembly;

FIGURE 2 is an assembled perspective; and

FIGURE 3 is a cross sectional view of a cap-type connector including the principal gist of the present invention.

Referring now more particularly to the drawings, wherein like numerals indicate like parts, the numeral **10** indicates the assembled structure of this invention. The assembly generally includes a plastic liquid detergent bottle or the like **12** having its interior communicated with a fluid delivering conduit **14** via a connector **16**.

The connector is comprised of a cylindrical body **18** having an interiorly directed annular washer or flange **20** intermediate its length defining a fluid pass-through opening **22**. At a first end of the connector there is formed a set of threads **24** adapted to mate with the conventional threads **26** of the home-use water hose **14**. On the other side of flange **20** the connector **16** is provided with a set of wide ridge threads **28** adapted to mate with threads **30** of neck portion **32** of container **12**.

Prior to assembling the unit, a plurality of apertures **34** are formed in the container by a large pin, ice pick, nail or any pointed instrument commonly found in the average household. It is apparent that the number and pattern of holes **24** are at the complete discretion of the person using the instrument.

The unit is assembled by merely threading the neck

32 into threads **28** until the end **36** is in abutment with the surface **38** of the interior flange **20**, and threading conduit **40** into threads **24** until the end **40** is in abutment with the surface **42** of flange **20**. The container **12** and hose **14** are threaded toward each other until the flange **20** is slightly compressed causing a seal between the flange **20** and the ends **36** and **40**. After assembly, the interior of the holes **14** is in communication with the apertures formed in the container **12**. When water under pressure is delivered via the hose **14** the container will perform as a sprinkling system.

Referring now to FIGURE 3, there is shown a cap-type connector which embodies the basic improvement heretofore described. This embodiment is so constructed that it is serviceable as an enclosure cap when the container **12** is originally marketed. The FIGURE 3 device is substantially identical to the connector **18** except for the addition of an end member **50**. It is further provided with a score line **52** which facilitates the removal of the end member **50** so that it may be transformed into a connector identical to that indicated by the numeral **16**. The FIGURE 3 closure member provides a complete seal for the contents originally marketed with the container **12**.

As can be readily understood, the chamber **54** between the end member **50** and the flange **20** serves no useful purpose while the cap is utilized as an enclosure. As a further improvement the chamber **54** may be isolated from the interior of the container **12** by way of a thin membrane **56**. Again, the membrane **56** is easily punctured and removed when the cap is converted into a connector element. It can be seen that there has been described an inexpensive item of manufacture which readily transforms a common plastic, commercial container into a serviceable sprinkling device.

In a general manner, while there has been disclosed an effective and efficient embodiment of the invention, it should be well understood that the invention is not limited to such an embodiment, as there might be changes made in the arrangement, disposition, and form of parts without departing from the principle of the present invention as comprehended within the scope of the accompanying claim.

I claim:

A combined container and closure convertible into a connector for connection to a lawn hose having an exterior thread at one end thereof, comprising a plastic container having an exteriorly threaded neck and an enlarged body portion, said body portion being of plastic material readily hand perforated by a pointed instrument thereby communicating the interior of said container to atmosphere, a plastic closure comprising a cylindrical body of substantial thickness and having a hose receiving end and a neck receiving end, an integral cap closing said hose receiving end but being removable to convert said closure to a connector, a strengthened rib-like member comprising an inwardly directed annular flange intermediate the ends of said body defining a fluid pass-through opening, said flange being of substantial thickness and seating on the top of said neck, a puncturable membrane normally closing said fluid pass-through opening located within said flange prior to the removal of said cap, said membrane being of a thickness less than that of said flange, a first set of interior threads between said cap and said flange for mating with said exterior thread of a hose and a second set of interior threads between said flange and said open end mating with said threaded neck, and said body having an exterior annular score about the surface thereof adjacent said cap such that the removal of said cap and the puncturing of said membrane converts said closure to a

connector whereby a hose can be threaded into said connector and fluid under pressure in the hose can be sprinkled out of said body portion upon the formation of punctures therein.

References Cited by the Examiner

UNITED STATES PATENTS

1,475,908	11/1923	Walsh	220—27
1,933,117	10/1933	Markle	285—3
2,110,237	3/1938	Parsons	215—6
2,122,757	7/1938	Scott	285—175
2,139,961	12/1938	Kleid	215—100
2,750,068	6/1956	Platt	222—541
2,820,671	1/1958	McFarland	222—541
2,884,148	4/1959	Schneider et al.	215—43
3,028,032	4/1962	Jones	215—43
3,062,940	11/1962	Bauer et al.	285—2
3,083,916	4/1963	Neel	220—27

THERON E. CONDON, *Primary Examiner.*

EARLE J. DRUMMOND, *Examiner.*