(12) INTERNATIONAL APPLICATION PUBLISHED UNDER THE PATENT COOPERATION TREATY (PCT)

(19) World Intellectual Property Organization
International Bureau

(43) International Publication Date
7 February 2013 (07.02.2013)

WIPO | PCT

(10) International Publication Number
WO 2013/019808 A3

(51) International Patent Classification:
B65F 3/04 (2006.01) *B60P 3/22* (2006.01)
B65F 3/06 (2006.01)

(21) International Application Number:
PCT/US2012/049032

(22) International Filing Date:
31 July 2012 (31.07.2012)

(25) Filing Language: English

(26) Publication Language: English

(30) Priority Data:
61/513,831 1 August 2011 (01.08.2011) US

(71) Applicant *(for all designated States except US)*: **KANN MANUFACTURING CORPORATION** [US/US]; P. O. Box 400, Guttenberg, Iowa 52052 (US).

(72) Inventors; and
(75) Inventors/Applicants *(for US only)*: **GOEDKEN, Kenneth, D.** [US/US]; 2051 Wedgewood Drive, Dubuque, Iowa 52002 (US). **JOHNSON, Marlin, L.** [US/US]; 35273 Highway 52, Guttenberg, Iowa 52052 (US). **ROWLAND, Jared, L.** [US/US]; 746 4th Street NW, Dyersville, Iowa 52040 (US).

(74) Agent: **HARMS, Allan, L.**; 115 Third Street SE, Suite 500, Cedar Rapids, Iowa 52406 (US).

(81) Designated States *(unless otherwise indicated, for every kind of national protection available)*: AE, AG, AL, AM, AO, AT, AU, AZ, BA, BB, BG, BH, BN, BR, BW, BY, BZ, CA, CH, CL, CN, CO, CR, CU, CZ, DE, DK, DM, DO, DZ, EC, EE, EG, ES, FI, GB, GD, GE, GH, GM, GT, HN, HR, HU, ID, IL, IN, IS, JP, KE, KG, KM, KN, KP, KR, KZ, LA, LC, LK, LR, LS, LT, LU, LY, MA, MD, ME, MG, MK, MN, MW, MX, MY, MZ, NA, NG, NI, NO, NZ, OM, PE, PG, PH, PL, PT, QA, RO, RS, RU, RW, SC, SD, SE, SG, SK, SL, SM, ST, SV, SY, TH, TJ, TM, TN, TR, TT, TZ, UA, UG, US, UZ, VC, VN, ZA, ZM, ZW.

(84) Designated States *(unless otherwise indicated, for every kind of regional protection available)*: ARIPO (BW, GH, GM, KE, LR, LS, MW, MZ, NA, RW, SD, SL, SZ, TZ, UG, ZM, ZW), Eurasian (AM, AZ, BY, KG, KZ, RU, TJ, TM), European (AL, AT, BE, BG, CH, CY, CZ, DE, DK, EE, ES, FI, FR, GB, GR, HR, HU, IE, IS, IT, LT, LU, LV, MC, MK, MT, NL, NO, PL, PT, RO, RS, SE, SI, SK, SM, TR), OAPI (BF, BJ, CF, CG, CI, CM, GA, GN, GQ, GW, ML, MR, NE, SN, TD, TG).

Declarations under Rule 4.17:
— *as to the identity of the inventor (Rule 4.17(i))*
— *as to applicant's entitlement to apply for and be granted a patent (Rule 4.17(ii))*

Published:
— *with international search report (Art. 21(3))*
— *before the expiration of the time limit for amending the claims and to be republished in the event of receipt of amendments (Rule 48.2(h))*

[Continued on next page]

(54) Title: LOAD LEVELING MODIFICATION FOR FRONT LOADING REFUSE TRUCK

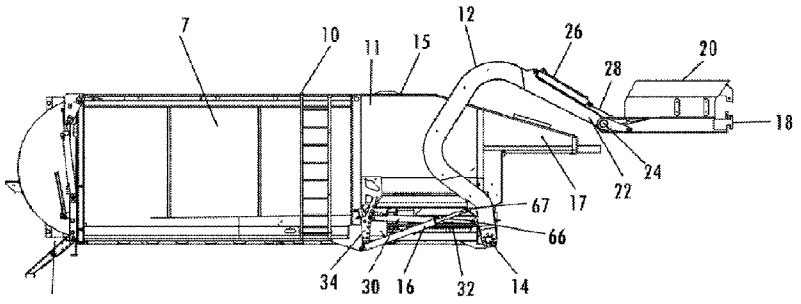

FIG. 1

(57) Abstract: A modification apparatus to convert an existing front loading refuse collection truck so that the lifted container remains level until the container is near the load opening of the refuse collection body of the truck. A mounting plate is bolted to brackets added to an existing refuse collection body and provides multiple connection points for attachment of one end of a slave cylinder that is hinged at its other end to one of the main lift arms of the collection body. As the rod of the slave cylinder extends or retracts with the movement of the lift arm, hydraulic fluid from the slave cylinder passes to fork cylinders which retract or extend to control the orientation of the lifted container relative to the lift arms. The apparatus can be easily added to a variety of existing front loading collection bodies.

WO 2013/019808 A3

(88) Date of publication of the international search report:
28 March 2013

INTERNATIONAL SEARCH REPORT

International application No.
PCT/US2012/049032

A. CLASSIFICATION OF SUBJECT MATTER

B65F 3/04(2006.01)i, B65F 3/06(2006.01)i, B60P 3/22(2006.01)i

According to International Patent Classification (IPC) or to both national classification and IPC

B. FIELDS SEARCHED

Minimum documentation searched (classification system followed by classification symbols)

B65F 3/04; B65F 3/02

Documentation searched other than minimum documentation to the extent that such documents are included in the fields searched

Korean utility models and applications for utility models

Japanese utility models and applications for utility models

Electronic data base consulted during the international search (name of data base and, where practicable, search terms used)

eKOMPASS(KIPO internal) & Keywords:vehicle, front end load, slave cylinder, and leveling cylinder

C. DOCUMENTS CONSIDERED TO BE RELEVANT

Category*	Citation of document, with indication, where appropriate, of the relevant passages	Relevant to claim No.
A	US 4,085,857 A (SMITH, FRED T.) 25 April 1978 see abstract; column 9, line 11-column 11, line 14, column 23, lines 11-31; figures 1-3,14.	1-16
A	US 4,091,944 A (GOLLNICK, CYRIL R.) 30 May 1978 see column 3, line 54-column 6, line 45; figures 1-6.	1-16
A	US 4,278,390 A (AHEARN, THOMAS M.) 14 July 1981 see column 4, line 32-column 5, line 28; figures 1-4.	1-16
A	US 4,647,267 A (HUND, JR., HENRY M.) 03 March 1987 see column 3, line 12-column 4, line 38; figures 1-4,8-11.	1-16

☐ Further documents are listed in the continuation of Box C.

☒ See patent family annex.

* Special categories of cited documents:

"A" document defining the general state of the art which is not considered to be of particular relevance

"E" earlier application or patent but published on or after the international filing date

"L" document which may throw doubts on priority claim(s) or which is cited to establish the publication date of citation or other special reason (as specified)

"O" document referring to an oral disclosure, use, exhibition or other means

"P" document published prior to the international filing date but later than the priority date claimed

"T" later document published after the international filing date or priority date and not in conflict with the application but cited to understand the principle or theory underlying the invention

"X" document of particular relevance; the claimed invention cannot be considered novel or cannot be considered to involve an inventive step when the document is taken alone

"Y" document of particular relevance; the claimed invention cannot be considered to involve an inventive step when the document is combined with one or more other such documents,such combination being obvious to a person skilled in the art

"&" document member of the same patent family

Date of the actual completion of the international search	Date of mailing of the international search report
28 JANUARY 2013 (28.01.2013)	**29 JANUARY 2013 (29.01.2013)**

Name and mailing address of the ISA/KR	Authorized officer
Korean Intellectual Property Office 189 Cheongsa-ro, Seo-gu, Daejeon Metropolitan City, 302-701, Republic of Korea Facsimile No. 82-42-472-7140	HAN Joong Sub Telephone No. 82-42-481-5606

INTERNATIONAL SEARCH REPORT

Information on patent family members

International application No.

PCT/US2012/049032

Patent document cited in search report	Publication date	Patent family member(s)	Publication date
US 4,085,857 A	25.04.1978	JP 51-043871 A	14.04.1976
		US 3988979 A	02.11.1976
		US 4085858 A	25.04.1978
		US 4088234 A	09.05.1978
		US 4148517 A	10.04.1979
		US 4230359 A	28.10.1980
US 4,091,944 A	30.05.1978	None	
US 4,278,390 A	14.07.1981	None	
US 4,647,267 A	03.03.1987	EP 0201314 A3	06.07.1988