Office de la Propriété Intellectuelle du Canada
Un organisme d'Industrie Canada

Canadian Intellectual Property Office
An agency of Industry Canada

CA 2304031 C 2005/02/01

(11)(21) 2 304 031

(12) BREVET CANADIEN
CANADIAN PATENT

(13) C

(86) Date de dépôt PCT/PCT Filing Date: 1998/09/11
(87) Date publication PCT/PCT Publication Date: 1999/03/25
(45) Date de délivrance/Issue Date: 2005/02/01
(85) Entrée phase nationale/National Entry: 2000/03/15
(86) N° demande PCT/PCT Application No.: US 1998/018931
(87) N° publication PCT/PCT Publication No.: 1999/014148
(30) Priorité/Priority: 1997/09/18 (08/932,659) US

(51) Cl.Int.^{7}/Int.Cl.^{7} B65H 39/10

(72) Inventeurs/Inventors:
DRISCOLL, JAMES N., US;
SKVORETZ, DAVID M., US;
MOSER, JAMES R., US;
DUDASH, DONALD, US

(73) Propriétaire/Owner:
BOWE BELL + HOWELL COMPANY, US

(74) Agent: KIRBY EADES GALE BAKER

(54) Titre : APPAREIL ET PROCEDE PERMETTANT D'INVERSER, ORGANISER ET DEVIER DES MATERIAUX DE TYPE FEUILLE

(54) Title: APPARATUS AND METHOD FOR INVERTING, STAGING AND DIVERTING SHEET ARTICLES

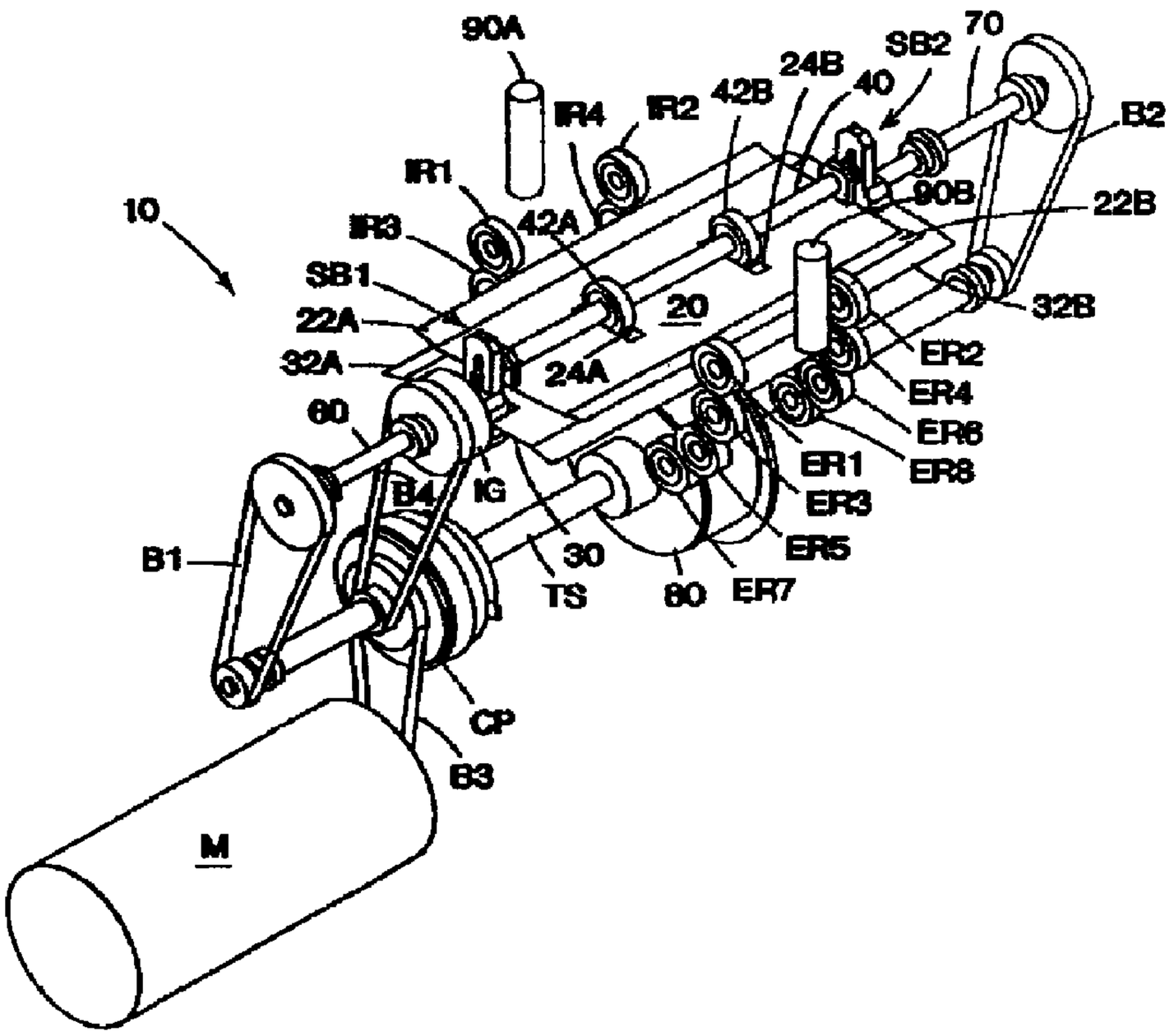

(57) Abrégé/Abstract:
A sheet processing apparatus (10) end method for selectively inverting, staging and selectively advancing or diverting sheet material along a selected one of a plurality of predetermined conveying paths are provided. The apparatus (10) includes a pair of support plates (20, 30) defining a space therebetween for advancement of sheet material therethrough, an advance mechanism (42A, 42B, 52A, 52B) for selectively staging and advancing sheet material, a rotation mechanism (TS, 60, 70) for selectively simultaneously rotating the support plates about an arc of at least approximately 180 degrees for selectively inverting sheet material therebetween or positioning sheet material therebetween for advancement along a predetermined conveying path.

PCT WORLD INTELLECTUAL PROPERTY ORGANIZATION
International Bureau

INTERNATIONAL APPLICATION PUBLISHED UNDER THE PATENT COOPERATION TREATY (PCT)

(51) International Patent Classification 6 : B65H 39/10 — A1

(11) International Publication Number: WO 99/14148

(43) International Publication Date: 25 March 1999 (25.03.99)

(21) International Application Number: PCT/US98/18931

(22) International Filing Date: 11 September 1998 (11.09.98)

(30) Priority Data:
08/932,659 18 September 1997 (18.09.97) US

(71) Applicant: BELL & HOWELL MAIL PROCESSING SYSTEMS COMPANY [US/US]; Pinnacle Park, 4401 Silicon Drive, Durham, NC 27709 (US).

(72) Inventors: DRISCOLL, James, N.; 139 Sterling Drive, Perkasie, PA 18944 (US). SKVORETZ, David, M.; 1313 Atlas Lane, Northampton, PA 18067 (US). MOSER, James, R.; 719 Arndt Road, Easton, PA 18040 (US). DUDASH, Donald; 27 Stonecroft Drive, Easton, PA 18045 (US).

(74) Agent: WILSON, Jeffrey, L.; Jenkins & Wilson, P.A., University Tower, Suite 1400, 3100 Tower Boulevard, Durham, NC 27707 (US).

(81) Designated States: AL, AM, AT, AU, AZ, BA, BB, BG, BR, BY, CA, CH, CN, CU, CZ, DE, DK, EE, ES, FI, GB, GE, GH, GM, HR, HU, ID, IL, IS, JP, KE, KG, KP, KR, KZ, LC, LK, LR, LS, LT, LU, LV, MD, MG, MK, MN, MW, MX, NO, NZ, PL, PT, RO, RU, SD, SE, SG, SI, SK, SL, TJ, TM, TR, TT, UA, UG, UZ, VN, YU, ZW, ARIPO patent (GH, GM, KE, LS, MW, SD, SZ, UG, ZW), Eurasian patent (AM, AZ, BY, KG, KZ, MD, RU, TJ, TM), European patent (AT, BE, CH, CY, DE, DK, ES, FI, FR, GB, GR, IE, IT, LU, MC, NL, PT, SE), OAPI patent (BF, BJ, CF, CG, CI, CM, GA, GN, GW, ML, MR, NE, SN, TD, TG).

Published
With international search report.

(54) Title: APPARATUS AND METHOD FOR INVERTING, STAGING AND DIVERTING SHEET ARTICLES

(57) Abstract

A sheet processing apparatus (10) and method for selectively inverting, staging and selectively advancing or diverting sheet material along a selected one of a plurality of predetermined conveying paths are provided. The apparatus (10) includes a pair of support plates (20, 30) defining a space therebetween for advancement of sheet material therethrough, an advance mechanism (42A, 42B, 52A, 52B) for selectively staging and advancing sheet material, a rotation mechanism (TS, 60, 70) for selectively simultaneously rotating the support plates about an arc of at least approximately 180 degrees for selectively inverting sheet material therebetween or positioning sheet material therebetween for advancement along a predetermined conveying path.

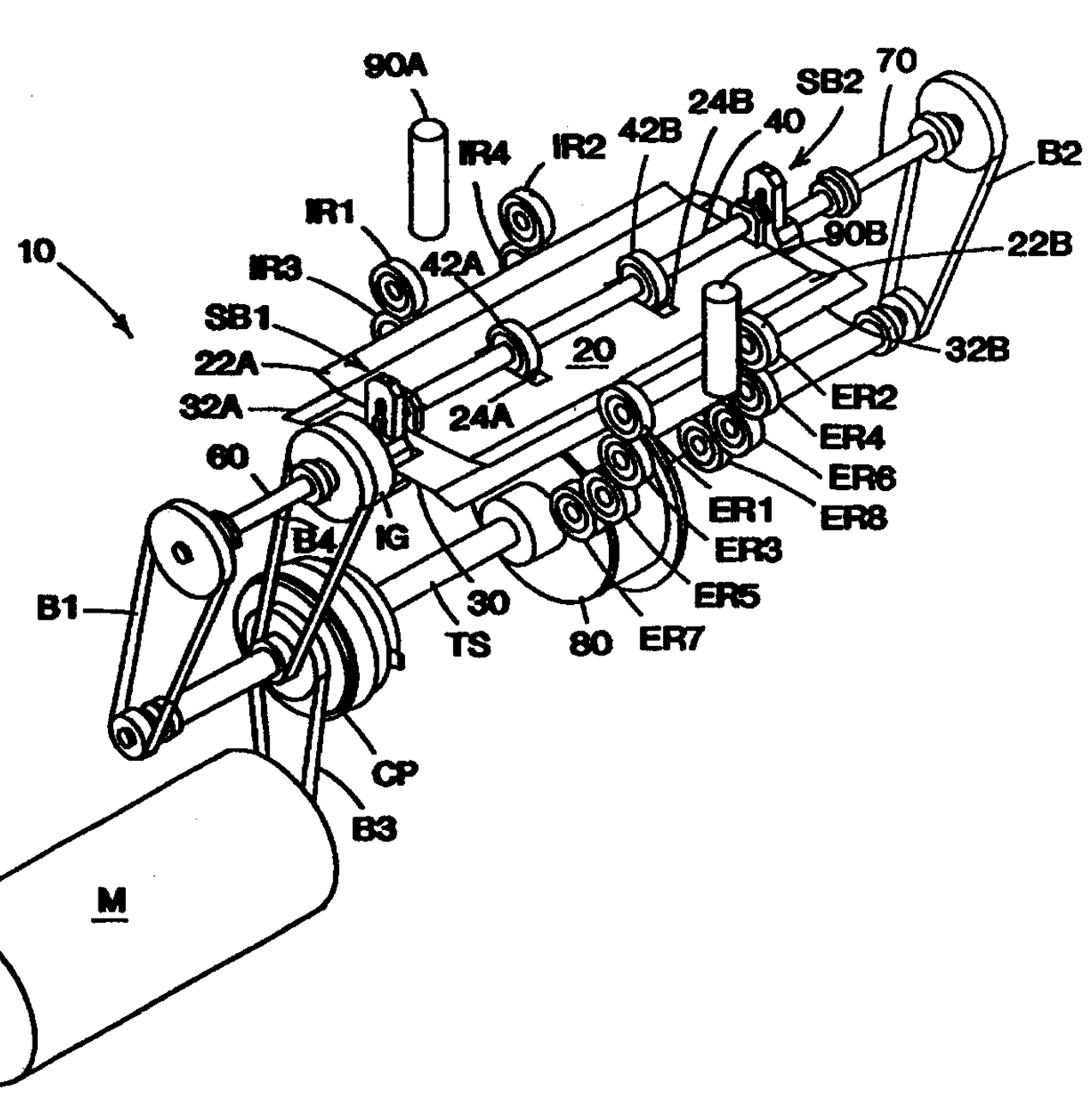

Description

APPARATUS AND METHOD FOR INVERTING, STAGING AND DIVERTING SHEET ARTICLES

Technical Field

The present invention relates generally to apparatuses and methods for inverting, staging and diverting sheet material. More particularly, the present invention relates to an apparatus and method for selectively inverting and staging sheet material and selectively advancing or diverting sheet material along a predetermined conveying path.

Background Art

It is common in the art of sheet material processing to collate sheet material, such as paper sheets, inserts, envelopes and the like, and insert the sheet material into a mailing envelope in such a manner as to present the mailing address on the sheet material in the window of the mailing envelope. Although sheet material inserted into mailing envelopes can be unfolded, a folding system is frequently utilized to fold the sheet material into a half, triple or quarter folded form which is delivered or advanced to a raceway for conveying the folded sheet material to an envelope inserting machine.

Various apparatuses exist in the prior art for advancing folded sheet material to a machine raceway. To date, apparatuses for advancing folded sheet material to the machine raceway have typically had to be mounted on the front or rear of the machine raceway depending upon the address position and the type of fold.

Despite the existence of prior art apparatuses for advancing sheet material to an envelope inserting machine raceway, there remains much room for improvement in the art, particularly for an apparatus and method for selectively inverting, staging and selectively advancing or diverting sheet material prior to delivery of the sheet material to an envelope inserting machine raceway.

Summary of the Invention

It is therefore an object of the present invention to provide a novel apparatus and method for selectively inverting, staging and selectively advancing or diverting sheet material.

It is another object of the present invention to provide an apparatus and method for selectively inverting, staging and selectively advancing or diverting sheet material wherein sheet material can be selectively inverted and/or staged and selectively advanced along a predetermined conveying path.

It is a further object of the present invention to provide an apparatus and method for selectively inverting, staging and selectively advancing or diverting sheet material wherein the apparatus and method are particularly

suitable for delivering folded sheet material into an envelope inserting machine raceway so that addresses on the sheet material are face down and will therefore appear in the windows of envelopes after the folded sheet material is inserted into the envelopes by an envelope inserting machine.

It is still a further object of the present invention to provide an apparatus and method for selectively inverting, staging and selectively advancing or diverting sheet material wherein the apparatus can be placed at any suitable location along an envelope inserting machine raceway without the restriction of having to be mounted to the front or rear of the envelope inserting machine raceway.

In accordance with one aspect of the present invention there is provided a sheet processing apparatus for selectively inverting, staging and selectively advancing or diverting sheet material along a selected one of a plurality of predetermined conveying paths, said sheet processing apparatus comprising: (a) a pair of support plates defining a space therebetween adapted for advancement of sheet material therethrough; (b) a nip roller mechanism in operative cooperation with said support plates for selectively staging in and advancing sheet material from the space between said support plates, said nip roller mechanism comprising at least a pair of cooperating nip rollers for engaging sheet material in said space between said support plates, said nip rollers being operatively positioned on shafts which are connected to said support plates such that rotation of said support plates simultaneously rotates said nip rollers and said shafts; and (c) a rotation mechanism for selectively simultaneously rotating said support plates and said nip roller mechanism at

least partially about an arc of a circle for selectively inverting sheet material therebetween and positioning sheet material therebetween for advancement along a selected one of a plurality of predetermined conveying paths; (d) whereby said sheet processing apparatus is selectively operative for: (i) sheet material between said support plates to be selectively inverted by rotation of said support plates by said rotation mechanism; (ii) sheet material between said support plates to be selectively positioned for advancement along a selected one of a plurality of predetermined conveying paths by rotation of said support plates by said mechanism; and (iii) sheet material between said support plates to be selectively staged and selectively advanced by said advance mechanism from between said support plates along a selected one of a plurality of predetermined conveying paths.

In accordance with another aspect of the present invention there is provided a method of selectively inverting, staging and/or selectively advancing sheet material along a predetermined path, said method comprising the steps of: (a) advancing sheet material between a pair of support plates between at least a pair of nip rollers attached to separate nip roller shafts, said nip rollers and said nip roller shafts together defining a nip roller mechanism; (b) selectively staging said sheet material between said support plates and said pair of nip rollers; (c) selectively simultaneously rotating said support plates and said nip roller mechanism at least partially about an arc of a circle with said sheet material between said support plates to selectively position said sheet material for subsequent

advancement along a predetermined conveying path; and (d) selectively advancing with rotation of at least one of said nip rollers said sheet material from between said support plates along a predetermined conveying path.

Some of the objects of the invention having been stated hereinabove, other objects will become evident as the description proceeds, when taken in connection with the accompanying drawings as best described hereinbelow.

Brief Description of the Drawings

Figure 1 of the drawings is a perspective view of a preferred embodiment of the sheet processing apparatus according to the present invention;

Figure 2 of the drawings is a front elevational view of the sheet processing apparatus of Figure 1;

Figure 3 of the drawings is a perspective view of a portion of the sheet processing apparatus of Figure 1 with the support plates, brake, sensors, and inlet and exit rollers removed;

Figure 4A of the drawings is a side elevational view of the sheet processing apparatus of Figure 1 wherein the support plates are in a position adapted for advancing sheet material along a first conveying path between the exit rollers downstream of the support plates; and

Figure 4B of the drawings is a side elevational view of the sheet processing apparatus of Figure 1 wherein the support plates are in a position adapted for advancing sheet material along a second conveying path between divert rollers downstream from the support plates.

Best Mode for Carrying Out the Invention

In accordance with the present invention, a sheet processing apparatus method **10** is provided for selectively inverting, staging and/or selectively advancing or diverting sheet material, such as single or stacked, folded or unfolded paper sheets for insertion into an envelope, along a selected one of a plurality of predetermined conveying paths. Referring to Figure 1 of the drawings wherein a perspective view of a preferred embodiment of sheet processing apparatus **10** is shown, sheet processing apparatus **10** comprises a pair of support plates **20** and **30** adapted for advancement of sheets therebetween. Each support plate **20** and **30** includes slightly bent flange portions **22A, 22B** and **32A, 32B**, respectively, on opposing ends thereof to assist sheets in passing between support plates **20** and **30**. Support plates **20** and **30** additionally include slots **24A, 24B** and **34A, 34B**

(not shown), respectively, defined therethrough in order for nip rollers to extend through the slots of both support plates **20** and **30** to engage sheets positioned therebetween, as further discussed hereinbelow. While it is envisioned that any suitable material could be used for construction of support plates **20** and **30**, it is preferred that support plates **20** and **30** be formed of metal. As can be appreciated by those of skill in the art, support plates **20** and **30** can be of a variety of sizes adapted for processing of sheet material therebetween as described hereinbelow.

As best illustrated in Figure 3 of the drawings, the nip rollers alluded to above which are adapted for extending through the slots of support plates **20** and **30** are nip rollers **42A** and **42B** which are positioned on inner shaft **40** and nip rollers **52A** and **52B** positioned on inner shaft **50**. The nip rollers are located on inner shafts **40** and **50** as shown such that nip rollers **42A** and **52A** are adapted for suitable pressured engagement against one another with a sheet positioned therebetween as are nip rollers **42B** and **52B**. In the preferred embodiment, nip rollers **42A** and **42B** on inner shaft **40** are idler rollers which are freely rotatable about inner shaft **40**. In the alternative, nip rollers **42A** and **42B** can be fixedly attached to inner shaft **40**, and inner shaft **40** can itself be freely rotatable about its center longitudinal axis.

Both inner shafts **40** and **50** extend in a parallel relationship between side brackets generally designated **SB1** and **SB2** which are located at opposite ends of inner shafts **40** and **50**. Inner shaft **40** is selectively moveable toward or away from inner shaft **50** by the connection of inner shaft **40** to side brackets **SB1** and **SB2** by extension of at least opposing portions of inner shaft **40** through slots **44A** and **44B** defined through side brackets **SB1** and **SB2**, respectively, such that such portions of inner shaft **40** are selectively moveable within slots **44A** and **44B**.

Inner shaft **50** also extends and is maintained between side brackets **SB1** and **SB2**. In the preferred embodiment, nip rollers **52A** and **52B** are fixedly attached to inner shaft **50**, and inner shaft **50** is freely rotatable about its center, longitudinal axis between side brackets **SB1** and **SB2**. A pinion **54** is operatively connected to inner shaft **50** through side bracket **SB1** such that rotation of pinion **54** causes identical and simultaneous rotation of inner shaft **50**. It is envisioned that pinion **54** can be integral with inner shaft **50** or simply attached thereto. As discussed hereinbelow, nip rollers **52A** and **52B** can therefore be drive rollers which can be used to drive sheets from between nip rollers **42A**, **42B** and **52A**, **52B**, respectively, and support plates **20** and **30** by operative rotation of inner shaft **50** through rotation of pinion **54**.

Side brackets **SB1** and **SB2** are positioned between a pair of outer shafts **60** and **70** which are operatively

connected to side brackets **SB1** and **SB2** also referred to as opposing base members, respectively, on shafts **60** and **70** are preferably aligned such that the center, longitudinal axes of outer shafts **60** and **70** are colinear. Outer shafts **60** and **70** are preferably fixedly attached to side brackets **SB1** and **SB2** such that rotation of either or both of outer shaft **60** and/or outer shaft **70** cause simultaneous, corresponding rotation of side brackets **SB1** and **SB2** and therefore also of inner shafts **40** and **50** in view of the attachment of inner shafts **40** and **50** to and extension between side brackets **SB1** and **SB2** as described hereinabove.

Outer shafts **60** and **70** include pulleys **P1** and **P2**, respectively, fixedly attached thereto. Sheet processing apparatus **10** includes a transmission shaft **TS**, also known as a jack shaft, as best shown in Figures 1, 2, and 3. Transmission shaft **TS** includes pulleys **P3** and **P4** for operative connection to belts **B1** and **B2** which also extend around pulleys **P1** and **P2** of outer shafts **60** and **70**, respectively. By this structure, rotation of transmission shaft **TS** about its center, longitudinal axis thereby simultaneously rotates belts **B1** and **B2** as well as pulleys **P1** and **P2** in order to correspondingly rotate side brackets **SB1** and **SB2** with inner shafts **40** and **50** therebetween. Rotation of transmission shaft **TS** can be accomplished by servomotor **M** which can rotate its operatively connected motor pulley **MP** as belt **B3** extends around and is driven by

motor pulley **MP** and also extends around and causes rotation of clutch pulley **CP** which is attached to transmission shaft **TS**. Clutch pulley **CP** can be in an engaged position where clutch pulley **CP** is maintained fixedly attached to transmission shaft **TS** such that rotation of clutch pulley **CP** causes simultaneous rotation of transmission shaft **TS**. Clutch pulley **CP** can also be in an unengaged position where clutch pulley **CP** is free to rotate about transmission shaft **TS** without causing any rotation of transmission shaft **TS**.

Clutch pulley **CP** also has a belt **B4** operatively extended around a portion thereof and which also operatively extends around a portion of internal gear **IG** which is preferably fixedly attached to outer shaft **60** as shown in Figures 1, 2, and 3 of the drawings. Internal gear **IG** is positioned on outer shaft **60** proximate side bracket **SB1** wherein the inner surface of internal gear **IG** engages pinion **54**, as shown in Figure 3, such that rotation of internal gear **IG** causes simultaneous rotation of pinion **54** and therefore inner shaft **50** and nip rollers **52A** and **52B** thereon.

As shown in Figures 1 and 2 of the drawings, a brake **80** is attached to transmission shaft **TS**. When on, brake **80** prevents transmission shaft **TS** from rotating in either direction. When off, brake **80** permits rotation of transmission shaft **TS** in either direction. Both brake **80** and clutch pulley **CP** can be of any suitable and

conventional type known to those in skill of the art of sheet processing.

By the structure of sheet processing apparatus **10** as described herein, sheet processing apparatus **10** can thereby be utilized for processing sheets wherein the sheets can be selectively inverted and/or staged between support plates **20** and **30** and selectively advanced from between support plates **20** and **30** along a predetermined conveying path which can be a divert path. To assist sheet apparatus **10** in such sheet processing, sheet apparatus **10** can further comprise a plurality of rollers strategically positioned for use in directing sheet material between support plates **20** and **30** as well as directing sheet material exiting from between support plates **20** and **30**. As shown in Figure 1 and partially shown in Figure 2 of the drawings, such rollers can comprise inlet rollers **IR1**, **IR2**, **IR3** and **IR4**, wherein inlet rollers **IR1** and **IR2** are upper rollers adapted for operative engagement with lower inlet rollers **IR3** and **IR4**, respectively. Such rollers can also comprise exit rollers for directing sheets along a predetermined conveying path upon exiting from between support plates **20** and **30**. As shown in Figures 1 and 2, such exit rollers can comprise exit rollers **ER1**, **ER2**, **ER3** and **ER4** for directing sheets in an advance direction for further processing. Exit rollers **ER1** and **ER2** are upper exit rollers adapted for operative engagement during sheet processing with lower exit rollers

ER3 and **ER4**, respectively. Exit rollers **ER5**, **ER6**, **ER7** and **ER8** can be provided for advancing sheets in a divert direction upon exiting from between support plates **20** and **30**. Exit rollers **ER5** and **ER6** are upper exit rollers adapted for operative engagement during sheet processing with lower exit rollers **ER7** and **ER8**.

As illustrated in Figures 1, 2, 4A and 4B, sheet processing apparatus **10** can also comprise electrical sensors for sensing the presence of sheet material during processing wherein the sensors can be connected to conventional computer means for operation thereof. Specifically, sheet processing apparatus **10** as shown comprises inlet sensor **90A** and exit sensor **90B** wherein inlet sensor **90A** is positioned so as to sense the presence of sheet material about to enter between support plates **20** and **30** between inlet rollers **IR1-IR4**. Similarly, exit sensor **90B** is positioned so as to be able to detect the presence of sheet material exiting sheet processing apparatus **10** from between support plates **20** and **30** and exit rollers **ER1-ER4** and a separate, similar or identical sensor (not shown) could be used to detect the presence of sheet material passing through exit rollers **ER5-ER8**.

SHEET PROCESSING METHOD OF THE PRESENT INVENTION

In accordance with the method of the present invention and referring initially to Figure 4A, sheet material enters sheet processing apparatus **10** from an

upstream device such as, for example, a folder, in the direction of arrow **A1** where the presence of sheet material can be detected by inlet sensor **90A** which can be electronically controlled to automatically initiate appropriate rotation of inlet rollers **IR1-IR4** to advance the sheet material therebetween and to and between support plates **20** and **30** between nip rollers **42A**, **52A**, and **42B**, **52B** in a position such as sheet **S** in Figure 4A. For purposes of describing the processing method of the present invention, support plates **20** and **30**, inner shafts **40** and **50**, nip rollers **42A**, **B**, and **52A, B**, and side brackets **SB1** and **SB2** can collectively be referred to as the nip roller system. The functioning of sheet processing apparatus **10** can be described by its three states of operation, each of which is described hereinbelow.

Operation State One

Sheet processing apparatus **10** is at rest in this state of operation. Motor **M** is off and clutch pulley **CP** is unengaged while brake **80** on transmission shaft **TS** is on in order to prevent transmission shaft **TS** from rotating. Three distinct rest positions exist within this state of operation. In the first rest position, which can be described as the normal rest position for the nip roller system, support plates **20** and **30** are in a horizontal position as spring-loaded nip rollers **42A** and **42B** are facing upwardly as shown in Figure 4A of the drawings. In

the second rest position (not shown), which can be described as the invert rest position for the nip roller system, support plates **20** and **30** are in a horizontal position while spring-loaded nip rollers **42A** and **42B** are facing downwardly. Finally, in the third rest position, which can be described as the divert rest position for the nip roller system, support plates **20** and **30** are not in a horizontal position but, rather, are in a divert position aligned with and adapted for advancing sheet material between exit rollers **ER5**, **ER7** and **ER6**, **ER8**, as illustrated in Figure 4B of the drawings where sheet **S** is maintained in the nip roller system in a divert position.

Operation State Two

In this state of operation of sheet processing apparatus **10**, nip rollers **52A** and **52B** rotate. Motor **M** is on and its rotation direction can be function dependent in that the direction of rotation of driven nip rollers **52A** and **52B** is a function of orientation (rest position). In the normal rest position, driven nip rollers **52A** and **52B** are positioned beneath spring-loaded nip rollers **42A** and **42B**, and driven nip rollers **52A** and **52B** are positioned above spring-loaded nip rollers **42A** and **42B** in the inverted rest position. Simultaneous with operation of motor **M**, brake **80** is on and clutch pulley **CP** is unengaged. Brake **80** therefore prevents transmission shaft **TS** from

rotating which prevents rotation of outer shafts **60** and **70** and therefore also of the overall nip roller system. Since clutch pulley **CP** is unengaged, clutch pulley **CP** is free to rotate about transmission shaft **TS** and this allows power transmission from motor **M** to internal gear **IG** by way of belts **B3** and **B1**. Such rotation of internal gear **IG** causes rotation of pinion **54** to correspondingly rotate inner shaft **50** and therefore nip rollers **52A** and **52B**. In this manner, sheet material positioned between support plates **20** and **30**, such as sheet **S** in Figures 4A and 4B, can be advanced from therebetween. The direction in which the sheet material can be advanced by nip rollers **52A** and **52B** can be in the advance direction as indicated by arrow **A2** in Figure 4A where sheet material, such as sheet **S**, will advance between exit rollers **ER1**, **ER3** and **ER2**, **ER4** where the presence of the exiting sheet material can be detected by exit sensor **90B**. The direction in which nip rollers **52A** and **52B** advance sheet material from between support plates **20** and **30** can also be in the divert direction as indicated by arrow **A3** in Figure 4B where the sheet material, such as sheet **S**, can be advanced between exit rollers **ER5**, **ER7** and **ER6**, **ER8**. The direction in which sheet material is advanced by nip rollers **52A** and **52B** from between support plates **20** and **30** is dependent upon the directional alignment of support plates **20** and **30** and determined by selected rotation of support plates **20** and **30**.

Operation State Three

In this state of operation of sheet processing apparatus **10**, the overall nip roller system including support plates **20** and **30** is rotated. Motor **M** is on as its rotation is again function dependent. Rotation of motor **M** is preferably counter-clockwise when the nip roller system rotates from a position for diverting to a position at least substantially horizontal, and rotation of the nip roller system is preferably clockwise for normal 180 degree rotation of the nip roller system. Simultaneous with rotation of motor **M**, clutch pulley **CP** is engaged and brake **80** is off to thereby allow transmission shaft **TS** to rotate. The engaged position of clutch pulley **CP** locks clutch pulley **CP** to transmission shaft **TS**. As such, motor **M** can drive clutch pulley together with transmission shaft **TS**. Belts **B1** and **B2** therefore simultaneously and identically rotate outer shafts **60** and **70** to rotate the overall nip roller system. In this manner, there is no relative rotation between internal gear **IG** and pinion **54**, thus preventing nip rollers **52A** and **52B** from rotating. Any sheet material positioned between support plates **20** and **30** as well as nip rollers **42A**, **52A** and **42B**, **52B** therefore remains in such position as the overall nip roller system including support plates **20** and **30** is selectively rotated.

Since rotation of motor **M** is function dependent, the rotation of the overall nip roller system including

support plates **20** and **30** can also be in either a clockwise or a counterclockwise direction as desired as indicated by arrow **A4** in Figures 4A and 4B. It can therefore be understood by those of skill in the art that support plates **20** and **30** with sheet material positioned therebetween, such as sheet **S** in Figures 4A and 4B, can selectively be rotated 360° about the arc of circle **C** shown in Figures 4A and 4B in order to invert the sheet material and/or selectively position sheet material therebetween for subsequent advancement in the advance direction of arrow **A2** of Figure 4A or in the divert direction of arrow **A3** of Figure 4B. As can also be readily understood by those of skill in the art of sheet processing, inversion of sheet material positioned between support plates **20** and **30** merely requires rotation of support plates **20** and **30** 180° while diversion of sheet material processed through sheet processing apparatus **10** merely requires rotation of support plates **20** and **30** at least approximately 45° in order to align and position sheet material between support plates **20** and **30** for subsequent advancement in the divert direction of arrow **A3** of Figure 4B.

It can therefore be seen that a novel apparatus and method for selectively inverting, staging and selectively advancing or diverting sheet material is provided. According to the invention as described herein, sheet material can be selectively inverted and/or staged and selectively advanced along a predetermined conveying path.

The apparatus and method described herein are particularly suitable for delivering folded sheet material into an envelope inserting machine raceway so that addresses on the sheet material are face down and will therefore appear in the windows of envelopes after the folded sheet material is inserted into the envelope by an envelope inserting machine. It can therefore be seen that the apparatus of this invention can be placed at any suitable location along an envelope inserting machine raceway without the restriction of having to be mounted to the front or rear of the envelope inserting machine raceway.

It will be understood that various details of the invention may be changed without departing from the scope of the invention. Furthermore, the foregoing description is for the purpose of illustration only, and not for the purpose of limitation, as the invention is defined by the following, appended claims.

Claims:

1. A sheet processing apparatus for selectively inverting, staging and selectively advancing or diverting sheet material along a selected one of a plurality of predetermined conveying paths, said sheet processing apparatus comprising:

(a) a pair of support plates defining a space therebetween adapted for advancement of sheet material therethrough;

(b) a nip roller mechanism in operative cooperation with said support plates for selectively staging in and advancing sheet material from the space between said support plates, said nip roller mechanism comprising at least a pair of cooperating nip rollers for engaging sheet material in said space between said support plates, said nip rollers being operatively positioned on shafts which are connected to said support plates such that rotation of said support plates simultaneously rotates said nip rollers and said shafts; and

(c) a rotation mechanism for selectively simultaneously rotating said support plates and said nip roller mechanism at least partially about an arc of a circle for selectively inverting sheet material therebetween and positioning sheet material therebetween for advancement along a selected one of a plurality of predetermined conveying paths;

(d) whereby said sheet processing apparatus is selectively operative for:

(i) sheet material between said support plates to be selectively inverted by rotation of said support plates by said rotation mechanism;

(ii) sheet material between said support plates to be selectively positioned for advancement along a selected one of a plurality of predetermined conveying paths by rotation of said support plates by said mechanism; and

(iii) sheet material between said support plates to be selectively staged and selectively advanced by said advance mechanism from between said support plates along a selected one of a plurality of predetermined conveying paths.

2. The sheet processing apparatus of claim 1 wherein said pair of nip rollers comprises an upper nip roller and a lower nip roller with said upper and lower nip rollers each extending through different openings defined in said support plates.

3. The sheet processing apparatus of claim 1 wherein said rotation mechanism comprises a motor operatively connected to and for driving a shaft to which at least one of said support plates is attached.

4. The sheet processing apparatus of claim 1 wherein said support plates are adjustably attached such that the space therebetween can be selectively adjusted to accommodate stacks of sheet material of different sizes.

5. The sheet processing apparatus of claim 1 further comprising inlet rollers and exit rollers positioned upstream and downstream, respectively, from said support plates for advancing sheet material between and from between, respectively, said support plates.

6. A sheet processing apparatus for selectively inverting, staging and selectively advancing sheet material along a selected predetermined conveying path, said sheet processing apparatus comprising:

(a) a pair of support plates defining a space therebetween for advancement of sheet material therethrough;

(b) at least one pair of cooperating nip rollers for operatively engaging sheet material in said space between said support plates, said nip rollers being positioned on first and second inner shafts which extend between opposing base members and at least one of said nip rollers being fixedly attached to said first inner shaft;

(c) a pinion extending from one of said base members and being connected to at least said first inner shaft such that rotation of said pinion simultaneously rotates said first inner shaft;

(d) opposing first and second outer shafts each operatively connected to a different one of said base members such that rotation of said first and second outer shafts simultaneously rotates said base members and said first and second inner shafts;

(e) a first gear member operatively attached on at least said first outer shaft and engaging said pinion such that rotation of said first gear member against said pinion to simultaneously rotate said pinion simultaneously rotates said nip roller on said first inner shaft; and

(f) a rotation mechanism for selectively rotating said first and second outer shafts and said first gear member.

7. The sheet processing apparatus of claim 6 wherein said rotation mechanism comprises a rotatable transmission shaft

which is operatively connected to said first and second outer shafts such that rotation of said transmission shaft simultaneously rotates said first and second outer shafts, said transmission shaft also being operatively connected to said first gear member by a selectively engageable clutch pulley such that rotation of said transmission shaft can selectively simultaneously rotate said first gear member.

8. The sheet processing apparatus of claim 7 further comprising a selectively engageable brake operatively attached to said transmission shaft.

9. The sheet processing apparatus of claim 7 wherein said rotation mechanism further comprises a motor operatively connected to and for driving said transmission shaft wherein said motor is operatively connected to said clutch pulley on said transmission shaft.

10. A method of selectively inverting, staging and/or selectively advancing sheet material along a predetermined path, said method comprising the steps of:

(a) advancing sheet material between a pair of support plates between at least a pair of nip rollers attached to separate nip roller shafts, said nip rollers and said nip roller shafts together defining a nip roller mechanism;

(b) selectively staging said sheet material between said support plates and said pair of nip rollers;

(c) selectively simultaneously rotating said support plates and said nip roller mechanism at least partially about an arc of a circle with said sheet material between said support plates to selectively position said sheet material

for subsequent advancement along a predetermined conveying path; and

(d) selectively advancing with rotation of at least one of said nip rollers said sheet material from between said support plates along a predetermined conveying path.

11. The method of claim 10 wherein said sheet material is also inverted by the step of paragraph (c).

12. The method of claim 10 wherein said sheet material is advanced from between said support plates along a predetermined conveying path which diverts said sheet material from an original conveying path along which said sheet material is advanced upstream from said support plates.

13. The method of claim 10 wherein said sheet material is advanced between said support plates by inlet rollers upstream from said support plates.

14. The method of claim 13 wherein said sheet material is advanced between and pulled by exit rollers positioned downstream from said support plates after said sheet material is advanced from between said support plates.

15. A method of selectively inverting, staging and/or selectively advancing sheet material along a predetermined path, said method comprising the steps of:

(a) advancing sheet material between a pair of support plates where said sheet material is maintained in position

by at least one nip roller on a shaft with a central axis maintained at a vertical position;

(b) selectively simultaneously rotating said support plates with said sheet material therebetween at least partially about an arc of a circle while simultaneously rotating the vertical position of said shaft holding said nip roller to selectively position said sheet material for subsequent advancement along a predetermined conveying path; and

(c) selectively actuating said at least one nip roller to advance said sheet material from between said support plates.

16. The method of claim 15 wherein said sheet material is inverted by the step of paragraph (b).

17. A sheet processing apparatus for selectively inverting, staging and selectively advancing sheet material along a selected predetermined conveying path, said sheet processing apparatus comprising:

(a) a pair of support plates defining a space therebetween for advancement of sheet material therethrough;

(b) at least one pair of cooperating nip rollers for operatively engaging sheet material in said space between said support plates, said nip rollers being positioned on first and second inner shafts which extend between opposing base members and at least one of said nip rollers being fixedly attached to said first inner shaft;

(c) a pinion extending from one of said base members and being connected to at least said first inner shaft such that

rotation of said pinion simultaneously rotates said first inner shaft;

(d) at least one outer shaft operatively connected to one of said base members such that rotation of said outer shaft simultaneously rotates both base members and said first and second inner shafts;

(e) a first gear member operatively attached to said outer shaft and engaging said pinion such that rotation of said first gear member against said pinion to simultaneously rotate said pinion simultaneously rotates said nip roller on said first inner shaft; and

(f) a rotation mechanism for operatively connecting with and for selectively rotating said outer shaft and said first gear member.

18. A method of selectively advancing sheet material along a selected predetermined conveying path, said method comprising the steps of:

(a) providing a sheet processing apparatus comprising:

(i) a pair of support plates defining a space therebetween for advancement of sheet material therethrough;

(ii) at least one pair of cooperating nip rollers for operatively engaging sheet material in said space between said support plates, said nip rollers being positioned on first and second inner shafts which extend between opposing base members and at least one of said nip rollers being fixedly attached to said first inner shaft;

(iii) a pinion extending from one of said base members and being connected to at least said first inner shaft such

that rotation of said pinion simultaneously rotates said first inner shaft;

(iv) at least one outer shaft operatively connected to one of said base members such that rotation of said outer shaft simultaneously rotates both base members and said first and second inner shafts;

(v) a first gear member operatively attached to said outer shaft and engaging said pinion such that rotation of said first gear member against said pinion to simultaneously rotate said pinion simultaneously rotates said nip roller on said first inner shaft; and

(vi) a rotation mechanism for selectively operatively connecting with and for selectively rotating said outer shaft and said first gear member;

(b) advancing sheet material between said support plates and said nip rollers wherein said nip rollers engage said sheet material;

(c) selectively simultaneously rotating said support plates a predetermined extent with said sheet material therebetween; and

(d) actuating at least one of said nip rollers to selectively advance said sheet material from between said support plates along a predetermined conveying path.

19. The method of claim 18 wherein selectively simultaneously rotating said support plates with said sheet material therebetween a predetermined extent is accomplished by rotation of said rotation member and said outer shaft.

20. The method of claim 18 wherein actuating at least one of said nip rollers to selectively advance said sheet material from between said support plates along a predetermined conveying path is accomplished by rotation of said first gear and said pinion.

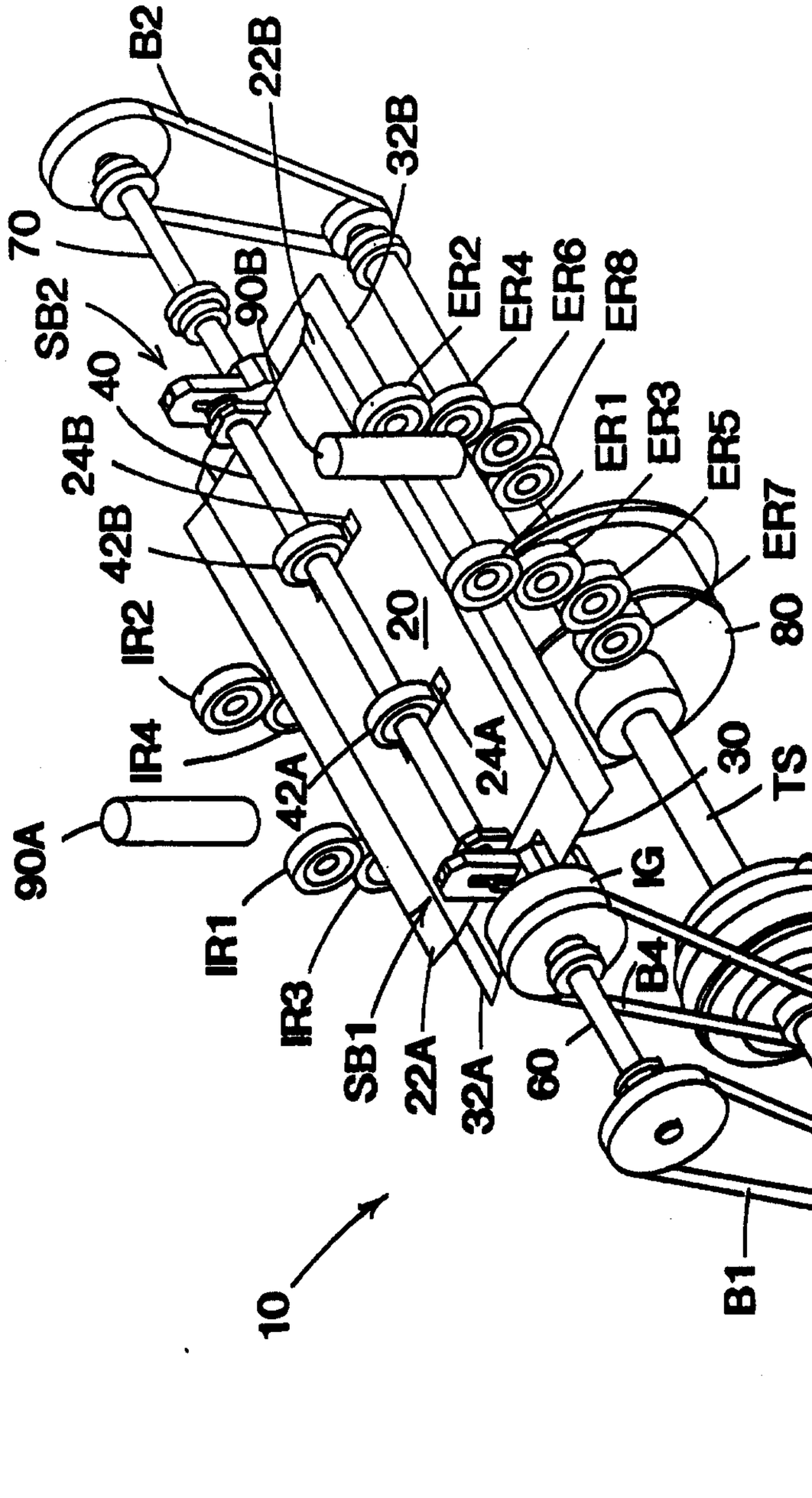
B2
22B
32B
70
SB2
90B
ER2
ER4
ER6
ER8
40
24B
ER1
ER3
ER5
42B
ER7
IR2
20
80
IR4
24A
30
TS
42A
90A
IG
CP
B3
IR1
B4
IR3
SB1
22A
32A
60
M
B1
10

FIG. 1

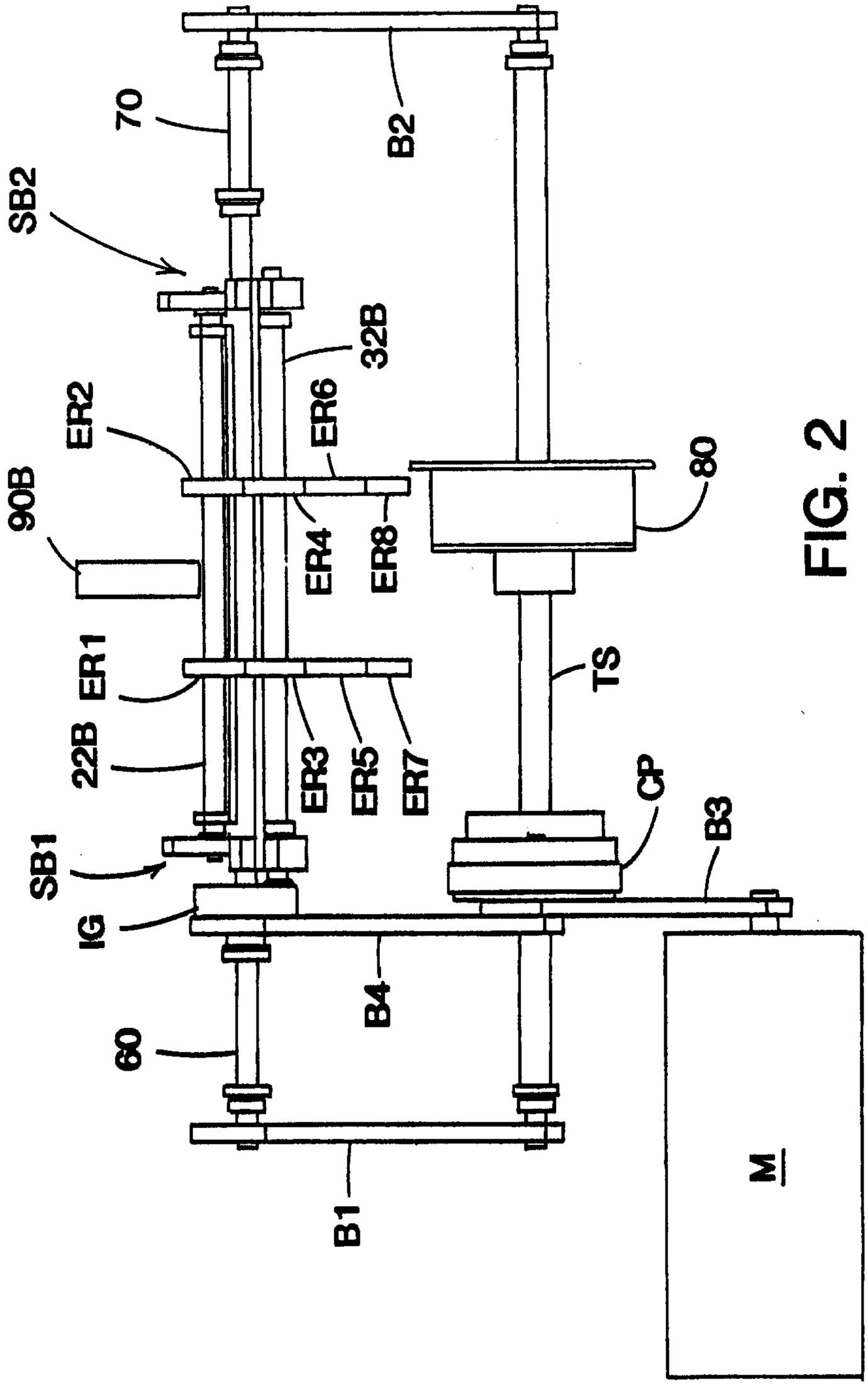
70
B2
SB2
32B
ER2
ER6
90B
80
ER4
ER8
ER1
22B
ER3
ER5
ER7
TS
CP
B3
SB1
IG
B4
60
B1
M
10

FIG. 2

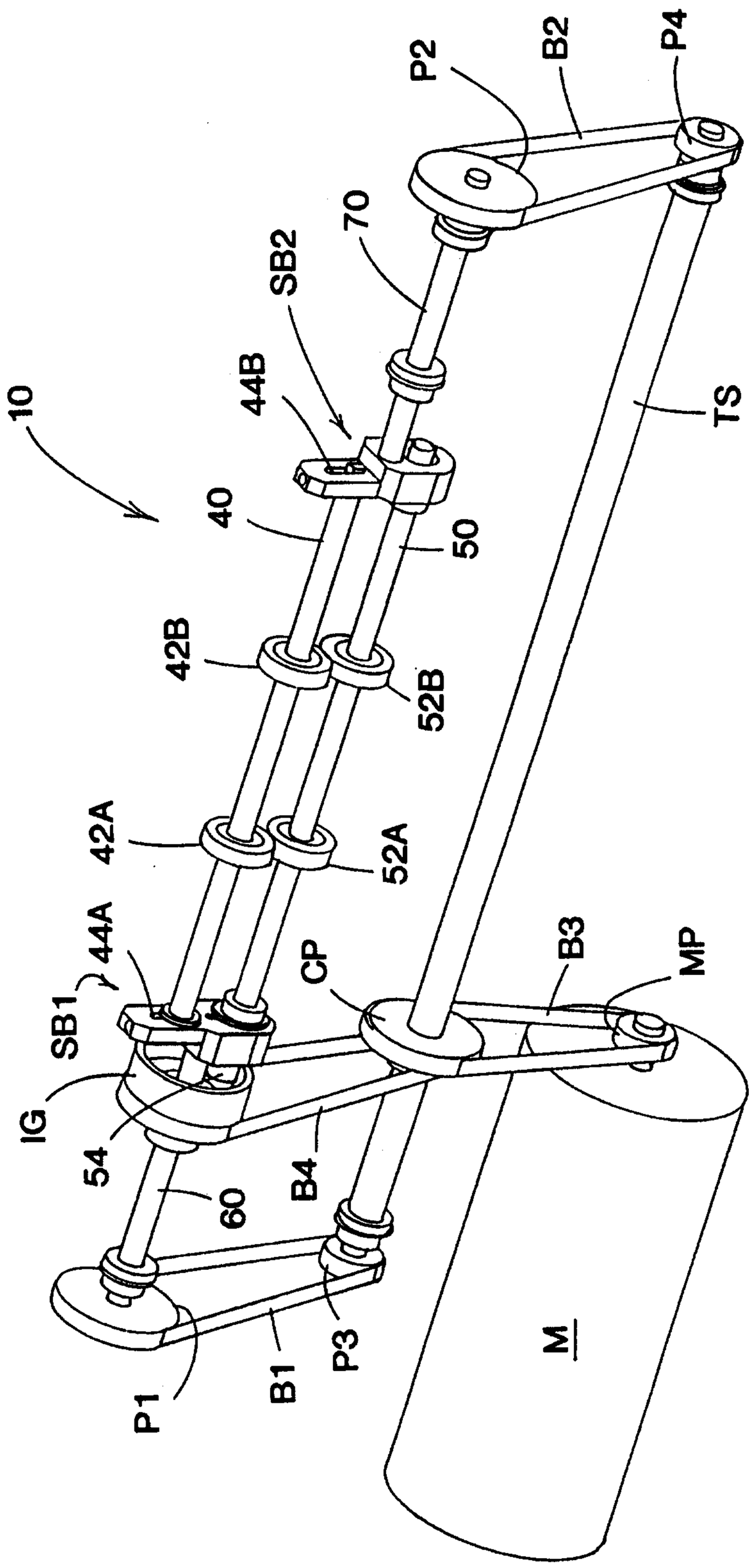
P2
B2
P4
70
SB2
44B
10
40
50
42B
52B
TS
42A
52A
44A
SB1
CP
B3
MP
IG
54
60
B4
P3
M
B1
P1

FIG. 3

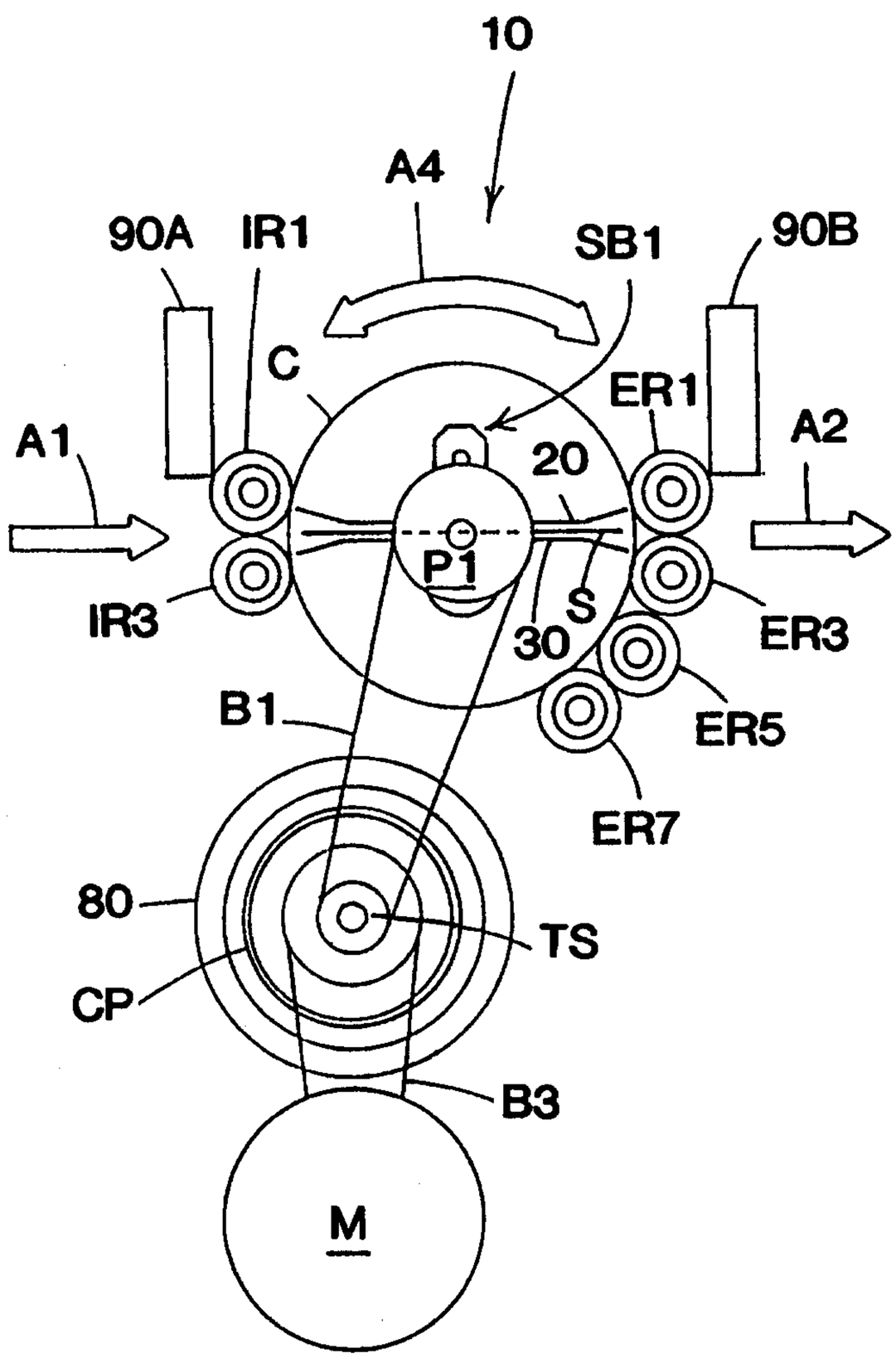
10
A4
90A
IR1
SB1
90B
C
ER1
A1
A2
20
P1
IR3
S
30
ER3
B1
ER5
ER7
80
TS
CP
B3
M

FIG. 4A

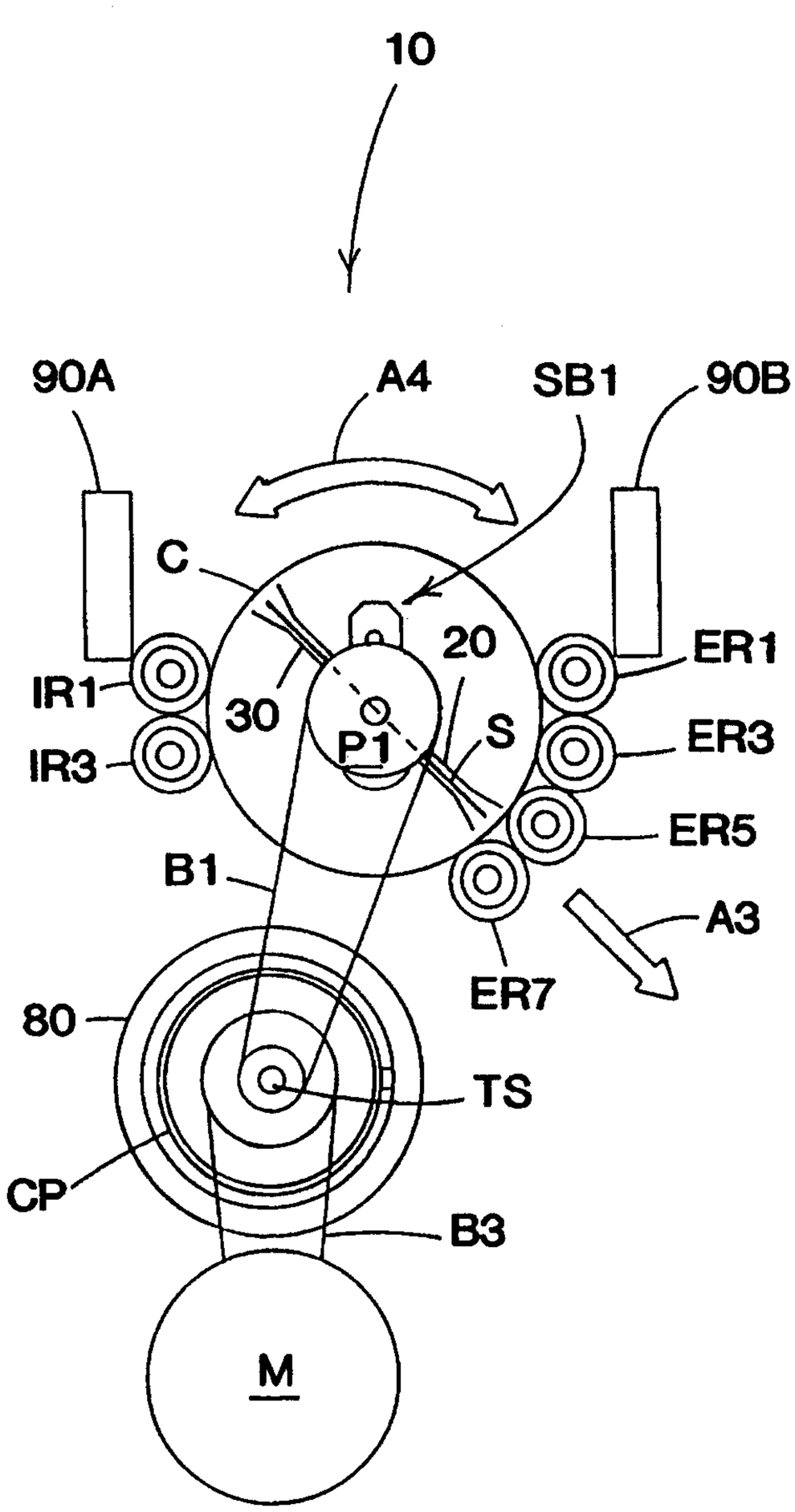
10
90A
A4
SB1
90B
C
20
ER1
IR1
30
P1
S
ER3
IR3
ER5
B1
A3
ER7
80
TS
CP
B3
M

FIG. 4B

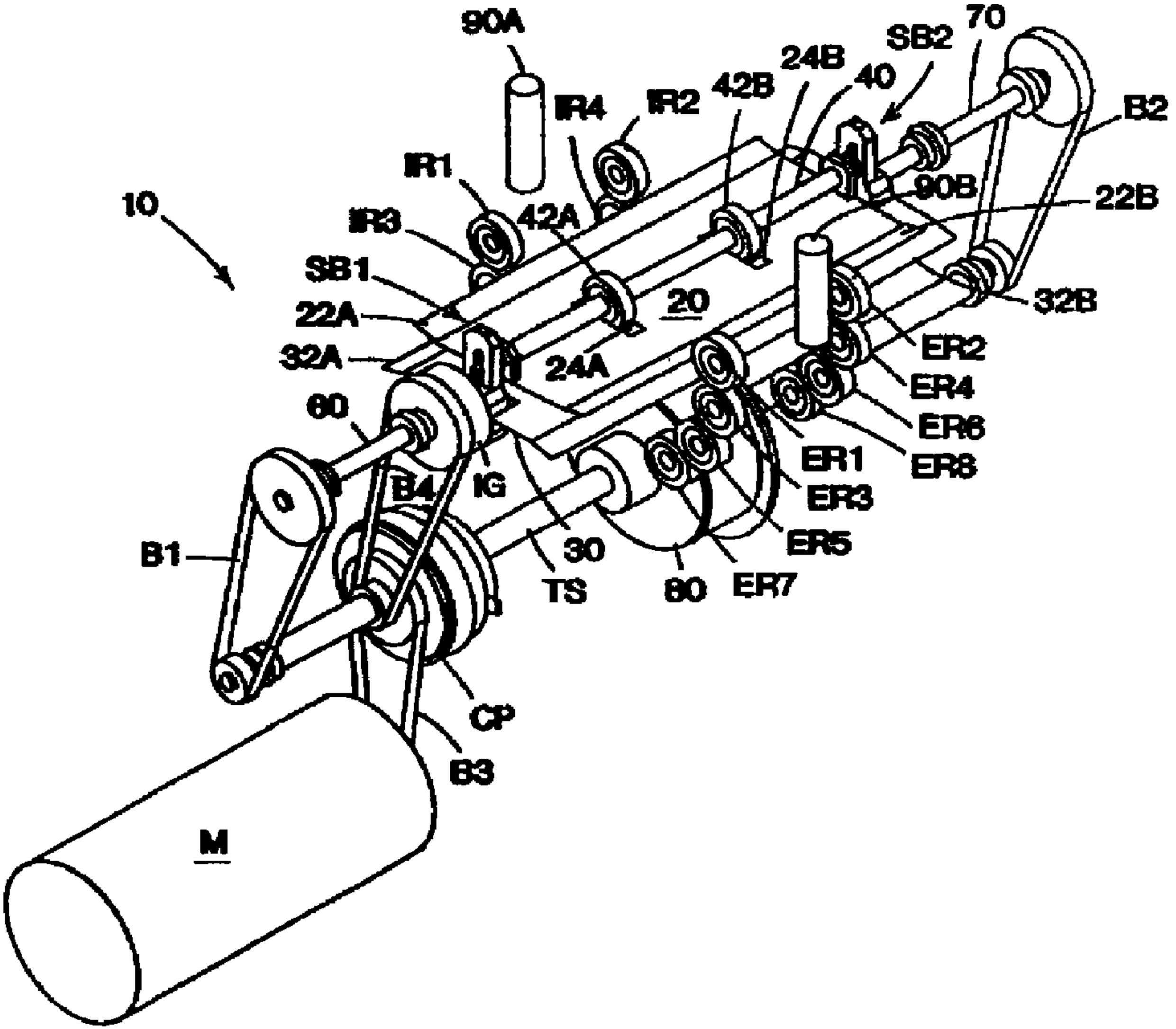
10
90A
IR4
IR2
42B
24B
40
SB2
70
B2
IR1
90B
22B
IR3
42A
SB1
20
32B
22A
24A
ER2
32A
ER4
60
ER6
ER1
ER8
B4
IG
ER3
ER5
30
B1
TS
80
ER7
CP
B3
M