March 27, 1951 W. E. ANGLIN 2,546,417

REFRIGERATING APPARATUS FOR BEVERAGE COOLERS

Filed May 14, 1948 4 Sheets-Sheet 1

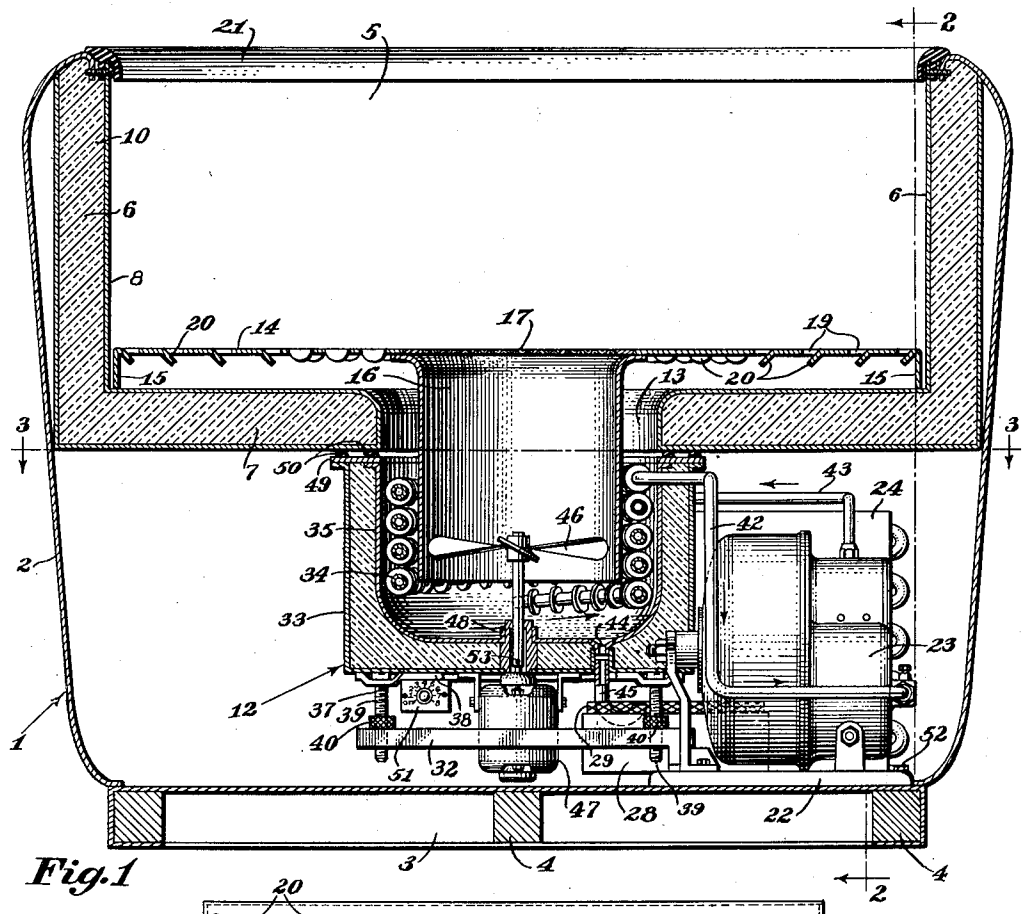

Fig. 1

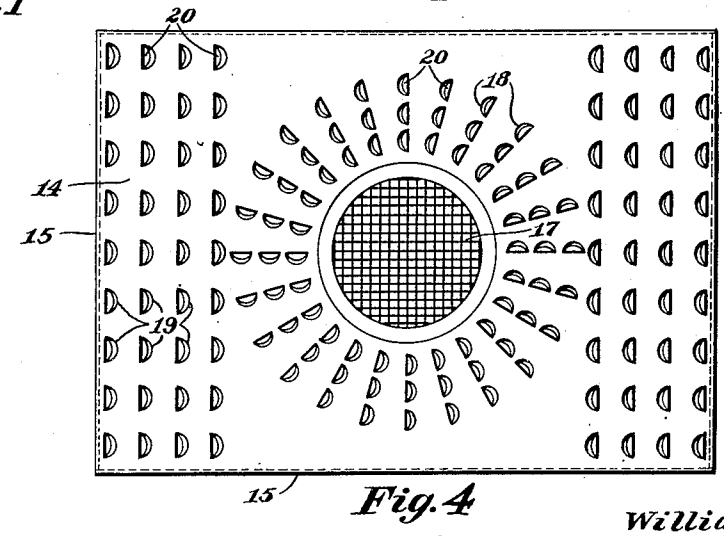

Fig. 4

INVENTOR,
William E. Anglin
By Mason, Fenwick & Lawrence
ATTORNEYS

March 27, 1951 W. E. ANGLIN 2,546,417

REFRIGERATING APPARATUS FOR BEVERAGE COOLERS

Filed May 14, 1948 4 Sheets-Sheet 2

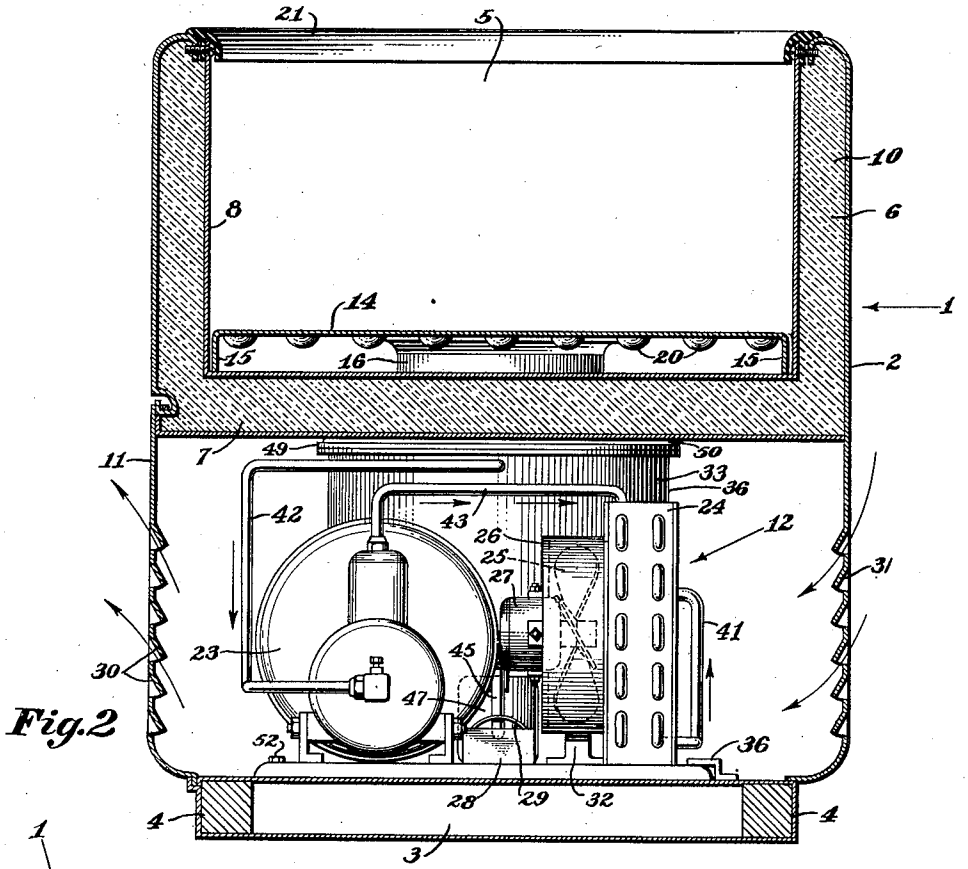

Fig. 2

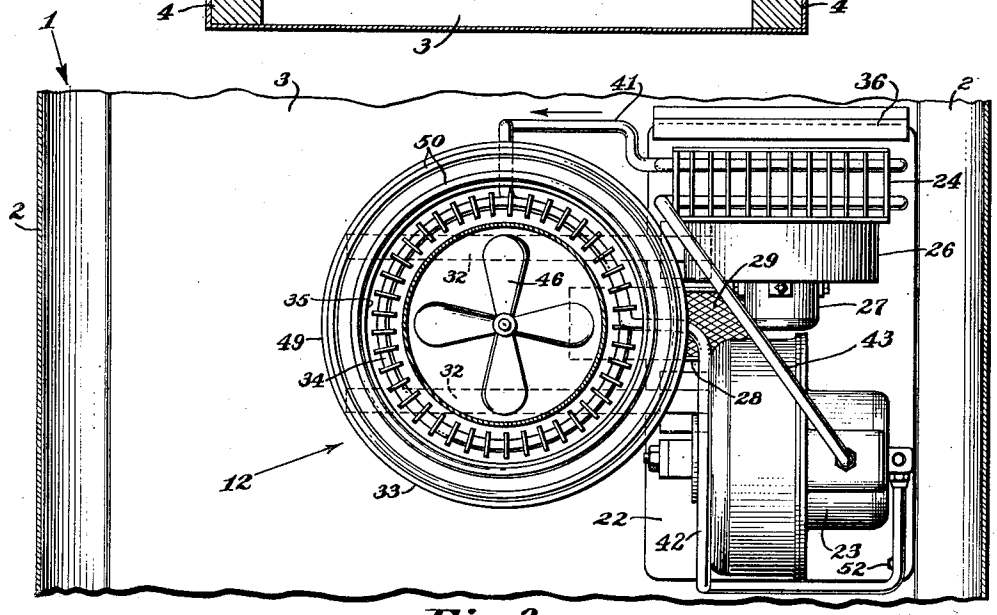

Fig. 3

INVENTOR
William E. Anglin
BY Mason, Fenwick & Lawrence
ATTORNEYS

March 27, 1951 W. E. ANGLIN 2,546,417

REFRIGERATING APPARATUS FOR BEVERAGE COOLERS

Filed May 14, 1948 4 Sheets-Sheet 3

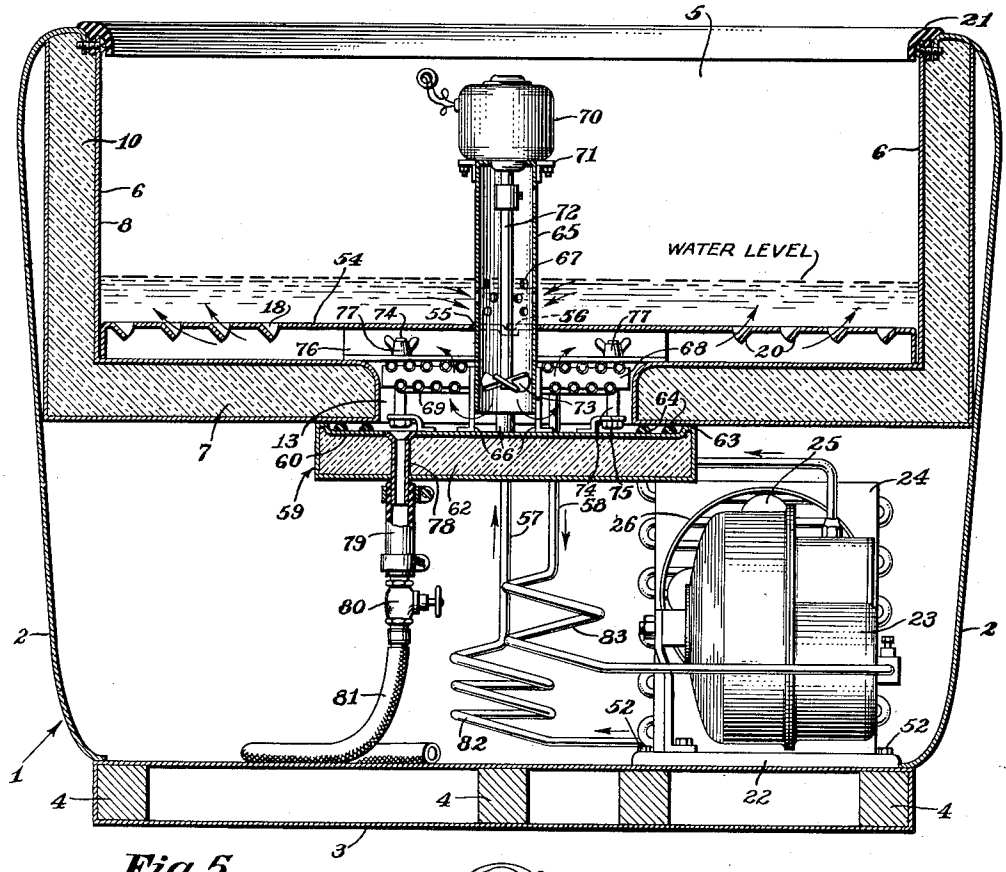

Fig. 5

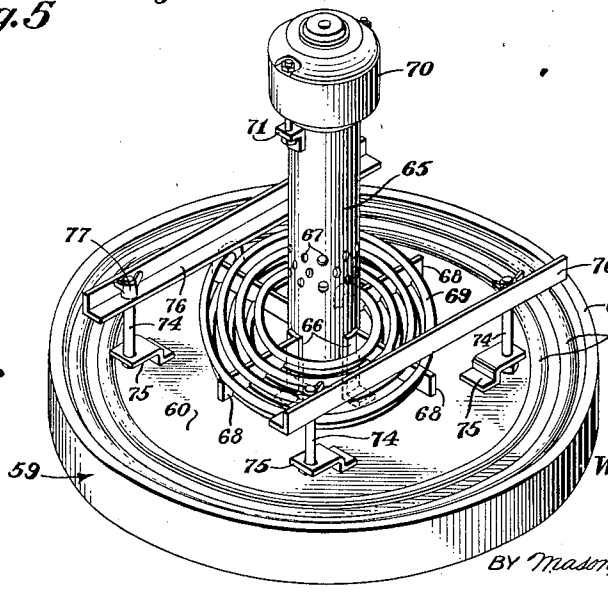

Fig. 6

Inventor
William E. Anglin
BY Mason, Fenwick & Lawrence
ATTORNEYS

March 27, 1951 W. E. ANGLIN 2,546,417

REFRIGERATING APPARATUS FOR BEVERAGE COOLERS

Filed May 14, 1948 4 Sheets-Sheet 4

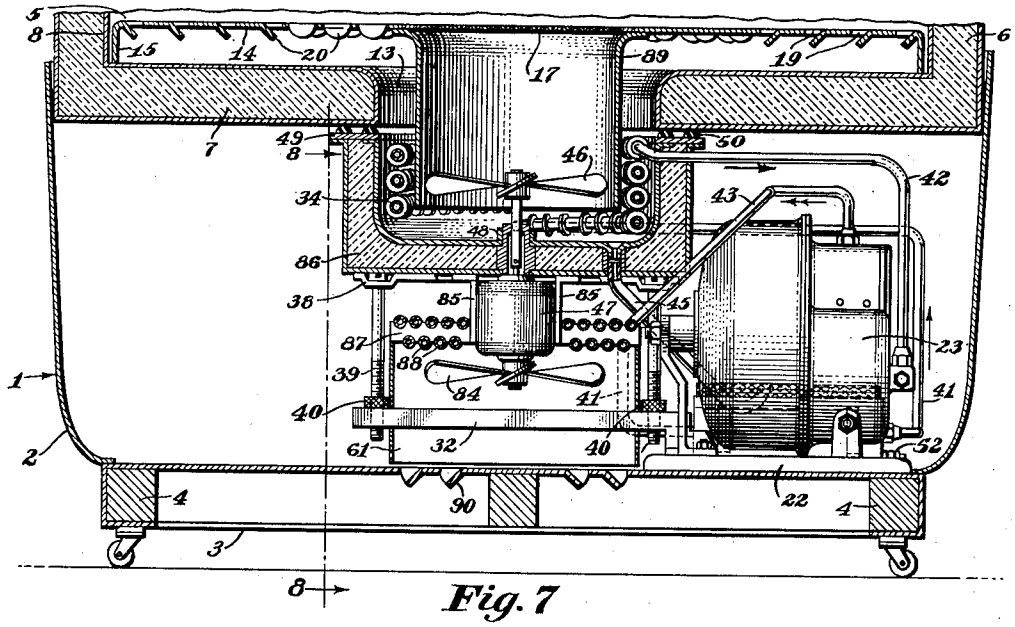

Fig. 7

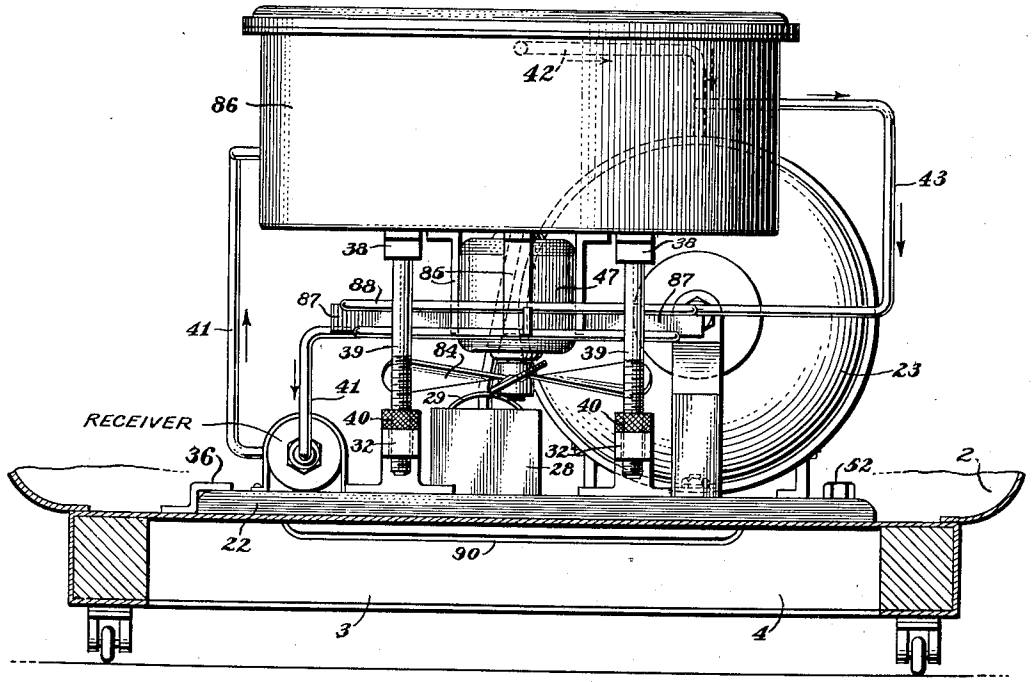

Fig. 8

INVENTOR
William E. Anglin

By Mason, Fenwick & Lawrence
ATTORNEYS

Patented Mar. 27, 1951

2,546,417

UNITED STATES PATENT OFFICE

2,546,417

REFRIGERATING APPARATUS FOR BEVERAGE COOLERS

William E. Anglin, Dallas, Tex.

Application May 14, 1948, Serial No. 27,104

15 Claims. (Cl. 62—141)

1

This invention relates to refrigerated chambers of that type in which the refrigerating unit it removable or replaceable as a unit, without disconnecting the refrigerant carrying conduits between the compressor, condenser and evaporating coil, to facilitate servicing when repairs are required. Such units are frequently referred to as "packaged units," since the replacement unit is generally brought to the place of installation in a crate or other container, and the removed unit taken away in the same container, to be repaired at the shop. In this way, the transfer can be made in a short time with minimum interruption to the maintenance of refrigeration in the chamber.

The actual removal or installation of the refrigerating unit is generally not a simple procedure, for the presence of the motor and compressor makes the unit heavy, and in general, it has to be lifted to the top of the refrigerator to be removed or inserted. This puts the service man in an awkward position, so that he is frequently obliged to let go of the unit before it is seated upon its normal support, resulting in impact shock both to the unit and refrigerator. In any event, there is considerable manipulation required of a heavy object in restricted quarters, unduly prolonging the job of removing the unit and inserting the replacement unit. Furthermore, the evaporator coil is generally located in a compartment separate from the motor-compressor-condenser part of the unit and is only flimsily attached by the flexible metal refrigerant conduits, so that a second man is usually required to handle the evaporator coil simultaneous with the lifting and lowering of the heavier part of the unit.

One of the objects of the present invention is to provide a refrigerating unit of the type embodying a closed refrigeration system, which can be removed or installed without the necessity of lifting it above the top of the refrigerated chamber.

Another object of the invention is to provide a refrigerating unit of the type described, to be employed with a refrigerated chamber having a bottom wall supported at such height as to permit the refrigerated unit to be positioned below said bottom wall, and having a hole in its bottom wall to register with the evaporator coil of the refrigerating unit, the latter including a closure for said hole beneath the evaporator coil, adapted to be brought into sealed engagement with said wall peripherally of said hole, whereby the evaporator coil is sealed within the refrigerated chamber, the motor-compressor condenser component of said unit being outside of said chamber.

2

Other and more specific objects of the invention will appear as the following description of practical embodiments thereof proceeds.

In its exemplary form herein shown, the invention is applied to a beverage cooler. It is, however, to be regarded as of general application to refrigerators of various types such as household, reach or walk-in boxes, deep freeze cabinets, air conditioners, etc.

The invention comprehends two types of heat exchange, one in which air is circulated over the evaporator coil, and through the refrigerator, and the other in which a liquid medium is similarly circulated, an example of the "packaged unit" for each type being herein illustrated and described.

In the drawings which accompany the following specification, and throughout the figures of which the same reference characters have been used to denote identical parts:

Figure 1 is a rear view in vertical section of a refrigerating unit embodying the principles of my invention, serving a beverage cooler;

Figure 2 is a vertical cross-section taken along the line 2—2 of Figure 1;

Figure 3 is a horizontal cross-section taken along the line 3—3 of Figure 1;

Figure 4 is a plan view of the bottle supporting tray.

The above figures illustrate a form of the invention designed for the use of air as the medium of heat exchange.

Figure 5 is a rear view in vertical section of a modified form of refrigerating unit in association with a beverage cooler, designed for the circulation of a liquid heat exchanging medium between coil and refrigerated chamber;

Figure 6 is a perspective view of the coil component of this unit, together with the structure intimately associated therewith;

Figure 7 is a longitudinal vertical section through a modified form of the invention;

Figure 8 is a cross-section taken along the line 8—8 of Figure 7, the shroud being omitted.

Referring now in detail to the several figures, and first adverting to that form of the invention disclosed in Figures 1 to 4, inclusive, the numeral 1 represents as a whole a beverage cooler comprising an outer casing 2, supported upon a base 3, said base including, as shown, a framework including the cross members 4. The casing 2 supports an open topped bottle cooling chamber 5, defined by the vertical insulated walls 6 and

the horizontal insulated bottom wall 7. Said walls include a continuous sheet metal lining 8, for said chamber. The bottle cooling chamber 5 occupies the upper part of the casing 2, so that the bottom wall 7 is at a distance above the base 3. At the rear the casing 2 is provided with a removable door 11 extending thereacross, giving access when removed, to the space below the bottom wall 7, within which space the refrigerating unit is located. Said unit as a whole is designated by the reference character 12.

The bottom wall 7 is provided with a large circular hole 13 therethrough, centrally located in the specific beverage cooler shown. The bottle cooling chamber 5 is provided with a removable bottle supporting tray 14, having a downturned peripheral flange 15 which rests upon the bottom wall 7, and having a deep cylindrical baffle 16 secured to the under side thereof, of smaller diameter than the hole 13, extending through said hole coaxially thereof. The tray 14 has a central hole in registry with the baffle 16, covered by a reticulated screen which, as shown, is in the same plane as the bottle supporting surface of said tray. The tray is provided with a circumferential series of louvers 18, extending in lines radiating from the center of the screen 17, and with parallel series of similar louvers 19, extending crosswise of the tray at each end. The louvers are formed by stamping out tongues 20 in an inclined downward direction, said tongues forming baffles beneath the tray. Said baffles are so directed as to deflect an air column rising through the hole 13, outside of the baffle 16 distributively through said louvers. A hinged lid, not shown, normally closes the cooling chamber 5, resting upon a peripheral rubber gasket 21, and which is raised by the customer who serves himself to a bottle from said chamber.

The refrigerating unit comprises a platform 22, on which are mounted a motor-compressor 23, condenser 24, and condenser fan 25, the latter being within a hood 26, and being operated by the fan motor 27. These parts are conventional and their arrangement is more or less conventional. A condensate pan 28 is also carried by the platform 22.

The condensate pan is provided with a convex supporting screen 29, reaching down to the interior bottom of the pan, over which a piece of gauze material or the like is spread, the edges of which dip into the condensate in the pan, raising it wick-like by capillarity, and assisting in its evaporation. The removable door 11 is provided with louvers 30, adjacent the motor-compressor, and the front of the casing 2 is provided with louvers 31 adjacent the condenser, air being drawn in at the latter louvers by the fan 25, and discharged through the louvers 30, the air, heated by its passage through the condenser, passing over the gauze material and evaporating the condensate. At opposite sides of the pan 28, the platform 22 is provided with outwardly extending arms 32, rigidly secured to said platform. These support an insulated well 33, within which the finned evaporator coil 34 is mounted. The walls of the well 33 are of insulating material and provided with a metal lining 35. The outer side of the bottom wall 37 of the well is horizontal and flat, and has secured thereto above each of the arms 32 a metal strip 38, having recesses at their opposite ends beneath said well which retain the heads of screws 39, the lower ends of which screws pass freely through unthreaded apertures in the arms 32. A knurled nut 40 on each screw above the arm 32 permits the screws to be raised or lowered relative to said arms when the nuts are turned, effecting vertical adjustment of the well 33 with respect to said arms and the platform 22. The coil 34 has conduit connections 41 and 42 (see particularly Figure 3), leading respectively from the condenser to the coil, and from the coil to the compressor. These connections have sufficient fullness to provide the flexibility necessary for the adjustment of the well together with the coil relative to the instrumentalities mounted on the stationary platform 22. The conduit connection 41 may be a capillary tube, or a receiver for liquid refrigerant (not shown), with temperature responsive feed valve (not shown), intercalated in the connection from the condenser to the evaporator coil. There is a connection 43 from the compressor to the condenser.

The well 33 has a drainage outlet 44, connected to a trap 45, which spills on the gauze material into the pan 28.

A fan 46 is provided for circulating refrigerated air past the coil 34, and through the chamber 5. This fan is on a vertical shaft coaxially of the well 33 and baffle 16, said shaft being driven by a motor 47 secured beneath said well and adjustable unitarily therewith. The inner lining 35 of the well has an upwardly extending flange 48 about the shaft bearing, to prevent any condensate in the well from leaking onto the motor. The fan operates within the lower end of the baffle 16, draws air downward through the reticulated screen 17, forces it upwardly over the finned coil 34, and distributes it in all directions beneath the tray 14, through which it issues by way of the louvers 18, 19, and returns through the reticulated screen which covers the central opening.

The well 33 is provided at the top with a flat annular plate 49, preferably of non heat conductive material, to which the inner and outer linings are secured, the upper face of said plate carrying the yielding circumferential gaskets 50 in adherence thereto, and which gaskets are pressed into sealing relation with the bottom wall 7 of the bottle cooling chamber 5, by means of the screws 39.

The numeral 51 represents the usual adjustable thermostatic switch which can be set to determine the temperature at which the refrigerating unit shall operate, the electrical connections being conventional and therefore not shown. The platform 22 is secured in place by means of the angle clamp 36, secured to the base of the cabinet near the front, under which the adjacent edge of the platform 22 is slipped, the opposite side of the platform being secured by bolts 52.

In order to remove the refrigerating unit, the tray 14 is lifted out through the top of the cooling chamber 5, carrying with it the cylindrical baffle 16, so that the latter does not obstruct the lateral movement of the refrigerating unit. The bolts 52 are then removed and the well 33, together with the coil 34, are lowered by operating the knurled nuts 40 so as to lower the screws 39. The refrigerating unit may then be slidably taken out through the rear of the casing 2, the door 11, of course, having been removed.

The replacement unit is inserted by reversing the removal operation, that is, the unit does not have to be lifted any higher than the height of the base 3. It is then slidably pushed into place, the screws being in relatively low position to per-

mit the gaskets 50 to clear the bottom wall 7. The bolts 52 are then replaced. The screws 39 are then screwed upwardly by manipulation of the knurled nuts 40 until the gaskets 50 have been compressed against the bottom wall 7. The well 33 thus becomes a part of the cooling chamber 5, with the evaporator coil sealed in said chamber while the rest of the refrigerating unit, with the exception of the fan, is outside of said chamber. The tray 14 is then replaced, bringing the baffle into position about the fan, and forming with the side wall of the well an annular conduit for the upward passage of refrigerated air. The reactive force created by compressing the gaskets 50 against the bottom wall 7, presses the lefthand end of the platform 22 against the base 3, thus obviating the necessity of employing bolts or any other fastening means to hold down the lefthand side of said platform.

In the shop, should it be necessary to remove the fan, this is done by dropping the motor 41 sufficiently to expose the set screw 53 below the well, whereupon by loosening the set screw, the fan shaft may be disconnected from the armature shaft of the motor.

Referring now to Figures 5 and 6, the structure of the beverage cooler 1 is to all intents and purposes the same as that in the first described form of the invention, and the tray 54 is similar to the tray 14, with the exception that it carries no cylindrical baffle 16, nor does it have a large central opening. Instead, it has a rather small central opening 55 and is divided transversely in the middle, having a stepped joint 56. This form of invention is designed for the liquid cooling of the bottles, the cooling chamber 5 now functioning as a tank. The motor-compressor-condenser component of the refrigerating unit is essentially the same as that of the first described modification, comprising a platform 22 on which are mounted the motor-compressor 23, condenser 24, condenser fan 25, and fan hood 26. The platform 22 is secured to the base 3 by lag screws 52, both at its outer and inner ends.

In contradistinction to the first described form of the invention, the evaporator coil component of the refrigerating unit is not supported by the platform 22, but connected with the motor-compressor-condenser component solely by the flexible refrigeration conduits 57 and 58, leading respectively from the condenser and to the compressor.

The coil component comprises an insulated closure 59 for the hole 13 in the bottom wall 7 of the cooling chamber. This closure, similarly to the walls of the cooling unit, has an inner metal lining 60, and is insulated as indicated at 62. The upper face of the closure 59 is slightly dished, forming a peripheral flange 63. A pair of inner and outer circumferential gaskets 64 are adhesively secured within the dished face of the closure 59, adjacent the peripheral flange, adapted to abut the under side of the bottom wall 7. Said gaskets, when released, are slightly higher than the flange 63, so that when the closure 59 is secured with the flange 63 in contact with the bottom wall 7, the gaskets 64 are compressed, forming a watertight seal. A tubular stack 65 coaxial with the closure 59 and with the hole 13, is secured to the inner face of the closure by means of brackets 66. The lower part of said stack is a water conduit, and has a zone of water inlet openings 67, opening to the cooling chamber 5, the uppermost of which determines the water level within the chamber 5. The

brackets 66 also support radiating arms 68, which support the turns of the evaporator coil 69. The arms 68 on their upper and lower edges, are formed with circular depressions a little deeper than the radius of the circle, in which depressions the turns of the coil are seated, the metal of said arms at the edges of said depressions being upset against the tubing of the coil, thereby holding it in place.

The upper end of the stack 65 supports a motor 70, which is secured thereto by means of studs passing through outstanding lugs 71 on said stack. The motor is connected to an impeller shaft 72, carrying the impeller 73 at its lower end, the impeller being within the lower open end of the stack 65. The lower end of said stack extends below the coil 69, but terminates above the inner face of the closure 59, and functions as a baffle to determine the circulation of water past said coil.

The closure 59 is secured in place by means of upstanding bolts 74, fixed to lugs 75, the latter being secured to the upper face of the closure 59. There are two pairs of such bolts, one pair being on each side of the stack, and having their upper threaded ends passing through the opposite ends of angle bars 76, which bridge the hole 13 and rest upon the inner face of the bottom wall 7, and are of such width in a height direction as to support the two halves of the tray. The closure 59 is drawn into sealed relation with the bottom wall 7, by means of wing nuts 77 on the upper ends of the bolts 74 which operate against the horizontal flanges of the angle bars 76.

The refrigerant connections 57 and 58 pass through the closure 59, and are soldered or brazed to the inner metallic lining 60, so as to produce a watertight joint at this point. A drainage tube 78 also passes through the closure 59, connected to the inner lining 60 in a watertight manner, and extending a short distance below said closure. A short section of hose 79 is clamped to the extended end of said drainage tube and a stop cock 80 connected to said hose. A length of flexible hose 81 is connected to the stop cock and normally occupies an inert position within the casing 2. When it is desired to drain the liquid from the cooling chamber 5, the door 11 is removed, the end of the hose 81 inserted into a bucket and the stop cock opened. Since in this form of the invention there is no condensate, the evaporating pan 28 which is present in the first described form of the invention, is omitted.

In order to remove this unit from the cooler, the motor 70, together with the impeller shaft and impeller, is first removed. The halves of the tray 54 are then slipped up out of the way or taken out at the top of the cooling chamber. The wing nuts 77 are then unscrewed and removed, freeing the bolts 74 from the angle bars 76. The closure 59, together with the coil and stack, is now lowered to the base 3 of the cooler. In order to permit the closure with coil to be lowered this distance, there must be considerable flexibility in the refrigerant connections 57 and 58. This is provided by giving considerable extra length to the refrigerant connections by boiling them in the manner indicated at 82 and 83. When the coil component of the refrigerating unit has thus been lowered, the entire unit may be slipped out laterally in the same manner as described in connection with the first modification.

To reinsert a replacement unit, the removal procedure is reversed.

In operation, the impeller 73 circulates water downward from the lower end of the stack, outward and upward in all directions through the coil, the chilled water being distributed beneath the tray 54, issuing through the louvers 18, circulating about the bottles resting upon said tray, and returning from all directions through the outlet openings 67 back to the impeller.

Both forms of the invention are characterized by the fact that practically no lifting of the refrigerating unit is required, either in removal or replacement, that either may be interchangeably used with refrigerators of similar construction and that both seal the coil within the refrigerated chamber, in a leakproof manner.

Figures 7 and 8 show a slightly modified form of the refrigerating unit disclosed in Figures 1 to 4, inclusive, the condenser being made a part of the coil component of said system instead of part of the motor-compressor-condenser component.

Referring to Figures 7 and 8, the shaft of the motor 47 which drives the fan 46 is extended at the lower side of the motor and carries the condenser fan 84. The brackets 85 which support the motor from the under side of the well 86, carry radially extending plates 87, similar to the plates 68 shown in Figure 6, which support the convolutions of the annular condenser 88, which surrounds the motor. The condenser is connected to the evaporator coil by means of the conduit 41 and to the compressor by the conduit 43. The opposite end of the evaporator coil is connected to the compressor by the conduit 42.

In order to make room for the fan 84, the well 86 is shorter than the well 33 shown in Figure 1, but is structurally similar. In view of the shortening of the well 86, the tubular baffle 89, which depends from the under side of the bottle supporting tray 14, is correspondingly shorter. Change in the position of the condenser 88 has necessitated a shift in the position of the condensate pan 28, which in Figure 7 is shown supported upon the platform 22.

The cabinet 2 is shown supported upon casters, giving access of atmospheric air to the under surface of its base which is provided with louvers 90, admitting air to the compartment in which the refrigerating unit is housed. The fan 84 draws air through the louvers, circulates it about the tubing of the condenser, from which it exhausts through the louvers in the door of the cabinet.

An open ended cylindrical preferably flexible shroud 61 surrounds the fan, being secured at one end to the condenser unit and extending about the louvers 90 at the other end, forming an induction conduit for the fan which substantially excludes the compartment space outside of said conduit.

Other than the above, the construction of the invention shown in Figures 7 and 8 is essentially the same as that shown in Figures 1 to 4, inclusive.

While I have in the above description disclosed what I believe to be several practical adaptations of my invention, it will be understood by those skilled in the art that the details of construction and arrangement of parts, as shown and described, are by way of example and not necessarily limiting the scope or application of the invention.

What I claim as my invention is:

1. In refrigerating apparatus of that type which includes a refrigerated chamber above a laterally accessible compartment for receiving a refrigerating unit, said refrigerated chamber having a bottom wall with an opening therethrough communicating with said compartment, a refrigerating unit for said refrigerated chamber housed in said compartment comprising a motor-compressor-condenser component and an evaporator coil component with refrigerant conduit connections between said components, said refrigerating unit being removable or replaceable as a unit laterally from or into said compartment without breaking said connections, said coil component including an annular coil and a closure for said opening beneath said coil and between said coil and said motor-compressor-condenser component, said coil being mounted on said closure, a tubular baffle of smaller cross-sectional dimensions than said opening having its lower end extending through said coil having its upper end opening in the refrigerated chamber and a pump within said baffle for recirculating fluid heat exchanging medium past said coil and through said refrigerated chamber, and means for raising said coil component independently of said motor-compressor-condenser component to bring said closure into sealing contact with said bottom wall peripherally about said opening whereby said coil is sealed within said refrigerated chamber while said motor-compressor-condenser component is excluded therefrom.

2. In refrigerating apparatus of that type which includes a refrigerated chamber above a laterally accessible compartment for receiving a refrigerating unit, said refrigerated chamber having a bottom wall with an opening therethrough communicating with said compartment, a refrigerating unit for said refrigerated chamber housed in said compartment, comprising a platform supporting a motor, compressor and condenser, said platform having a lateral extension beneath said opening, a closure for said opening in the form of a well adjustably mounted for vertical movement on said extension, means for raising said closure into sealing contact with said bottom wall peripherally of said opening, an annular evaporator coil within said well vertically movable therewith, refrigerant conduit connections between said coil and compressor and condenser, said refrigerating unit being removable or replaceable as a unit without breaking said connections, by lowering said well and coil to clear said bottom wall and sliding said unit laterally with respect to said compartment.

3. In refrigerating apparatus of that type which includes a refrigerated chamber above a laterally accessible compartment for receiving a refrigerating unit, said refrigerated chamber having a bottom wall with an opening therethrough communicating with said compartment, a refrigerating unit for said refrigerated chamber housed in said compartment, comprising a platform supporting a motor, compressor and condenser, said platform having a lateral extension beneath said opening, a closure for said opening in the form of a well adjustably mounted for vertical movement on said extension whereby it may be raised into sealing contact with said bottom wall peripherally of said opening, an annular evaporator coil within said well vertically movable therewith, refrigerant conduit connections between said coil and compressor and condenser, a motor carried by said well exteriorly thereof and a fan driven thereby within said annular coil, a removable louvered tray within said refrigerated chamber in spaced relation to said bottom wall, a tubular baffle carried

by said tray extending within said annular coil about said fan having its lower end terminating above the bottom of said well and its upper end opening into the part of the refrigerated chamber above said tray, said fan developing recirculation of air from said refrigerated chamber, through said baffle, about said coil and through said tray, said refrigerating unit being removable or replaceable as a unit without breaking said connections, after temporary removal of said tray with said baffle, by adjustably lowering said well and coil to clear said bottom wall and sliding said unit laterally with respect to said compartment.

4. In refrigerating apparatus of that type which includes a refrigerated chamber above a laterally accessible compartment for receiving a refrigerating unit, said refrigerated chamber having a bottom wall with an opening therethrough communicating with said compartment, a refrigerating unit for said refrigerated chamber housed in said compartment comprising a base supporting the conventional instrumentalities and conduit connections therebetween constituting a Carnot type refrigeration system, said instrumentalities including an evaporator coil, means forming a closure for said opening unitary with said coil and between said coil and the other instrumentalities of said system, said coil and closure being movable relative to said other instrumentalities through the flexibility of said connections without breaking said connections, and screw and nut means between said base and closure, supporting said coil and closure from said base, reacting oppositely against said base and closure, for raising said coil and closure as a unit relative to said base to bring said coil in registry with said opening and said closure into sealing contact with said bottom wall peripherally of said opening whereby said coil is sealed within said refrigerated chamber, while the other instrumentalities of said system are excluded therefrom.

5. In refrigerating apparatus of that type which includes a refrigerated chamber above a laterally accessible compartment for receiving a refrigerating unit, said refrigerated chamber having a bottom wall with an opening therethrough communicating with said compartment, a refrigerating unit for said refrigerated chamber housed in said compartment comprising the conventional instrumentalities and conduit connections therebetween constituting a Carnot type refrigeration system, said instrumentalities including an annular evaporator coil, means forming a dished closure for said opening unitary with said coil and between said coil and the other instrumentalities of said system having its dished side toward said coil, said coil and closure being movable relative to said other instrumentalities through the flexibility of said conduit connections without breaking said connections, a motor on the lower side of said closure carried thereby having its shaft extending through said closure and an impeller on said shaft extending within said coil, a tubular baffle between said impeller and coil, and means between said base and closure supporting said coil and closure, for raising said coil and closure relative to said other instrumentalities for bringing said coil into registry with said opening and said closure into sealing engagement with said bottom wall peripherally of said opening whereby said coil is sealed within said refrigerated chamber, while said other instrumentalities are excluded therefrom.

6. Refrigerating apparatus as claimed in claim 5, said closure having the form of a well surrounding said coil.

7. In refrigerating apparatus of that type which includes a refrigerated chamber above a laterally accessible compartment for receiving a refrigerating unit, said refrigerated chamber having a bottom wall with an opening therethrough communicating with said wall, a refrigerating unit for said refrigerated chamber housed in said compartment comprising a base supporting the conventional instrumentalities and conduit connections therebetween constituting a Carnot type refrigeration system, said instrumentalities including an annular evaporator coil and a condenser, means forming a closure for said opening unitary with said coil and condenser and between said coil and the other instrumentalities of said system, said coil, closure and condenser being movable relative to said other instrumentalities through the flexibility of said conduit connections without breaking said connections, a motor on the lower side of said closure, carried thereby, having its shaft extending through said closure, within said coil and an impeller on said shaft operating within said coil, a tubular baffle between said impeller and coil, said condenser being carried by said closure, a fan on the opposite end of said motor shaft adjacent said condenser, and screw and nut means between said base and closure, supporting said coil, closure and condenser for raising said coil, closure and condenser relative to said other instrumentalities to bring said coil into registry with said opening and said closure into sealing engagement with said bottom wall peripherally of said opening whereby said coil is sealed within said refrigerated chamber, while said other instrumentalities are excluded therefrom.

8. In refrigerating apparatus of that type which includes a refrigerated chamber above a laterally accessible compartment for receiving a refrigerating unit, said refrigerated chamber having a bottom wall with an opening therethrough communicating with said compartment, a refrigerating unit for said refrigerated chamber housed in said compartment, comprising a platform supporting a motor, compressor and condenser, a closure for said opening, an annular evaporator coil mounted on the upper side of said closure, spaced therefrom, flexible conduit connections between said coil and said compressor and condenser, securing means coacting with the upper side of said bottom wall for fixing said coil within said opening and bringing said closure into sealing engagement with the lower side of said bottom wall peripherally of said opening, a tubular baffle supported upon said closure extending through said coil into said refrigerated chamber, having its lower end spaced from said closure and being apertured in a zone intermediate its length, a removable motor on the upper end of said baffle having a shaft extending through said baffle, an impeller on said shaft at a point below said apertured zone, the overall height dimension of said closure including said tubular baffle being less than the height of said compartment.

9. Refrigerating apparatus as claimed in claim 8, said securing means comprising bars bridging said opening resting on the upper side of said bottom wall, bolts secured to said closure extending through said opening and through said bars, and nuts on said bolts coacting with said bars

to effect clamping pressure between said bars and closure against said bottom wall.

10. In refrigerating apparatus of that type which includes a refrigerated chamber above a laterally accessible compartment for receiving a refrigerating unit, said refrigerated chamber having a bottom wall with an opening therethrough communicating with said compartment, a refrigerating unit for said refrigerated chamber housed in said compartment comprising a base supporting the conventional instrumentalities and conduit connections therebetween constituting a Carnot type refrigeration system, said instrumentalities including an evaporator coil, means forming a closure for said opening unitary with said coil and between said coil and the other instrumentalities of said system, said coil and closure being movable relative to said other instrumentalities through the flexibility of said connections without breaking said connections, and means adjustable lengthwise between said base and closure, supporting said coil and closure from said base and reacting oppositely against said base and closure, and reacting against said base and closure, for raising said coil and closure as a unit to bring said coil in registry with said opening and said closure into sealing contact with said bottom wall peripherally of said opening whereby said coil is sealed within said refrigerated chamber, while the other instrumentalities of said system are excluded therefrom.

11. In refrigerating apparatus of that type which includes a refrigerated chamber above a laterally accessible compartment for receiving a refrigerating unit, said refrigerated chamber having a bottom wall with an opening therethrough communicating with said wall, a refrigerating unit for said refrigerated chamber housed in said compartment comprising a base supporting the conventional instrumentalities and conduit connections therebetween constituting a Carnot type refrigeration system, said instrumentalities including an annular evaporator coil and a condenser, means forming a closure for said opening unitary with said coil and condenser and between said coil and the other instrumentalities of said system, said coil, closure and condenser being movable relative to said other instrumentalities through the flexibility of said conduit connections without breaking said connections, a motor on the lower side of said closure, carried thereby, having its shaft extending through said closure, within said coil and an impeller on said shaft operating within said coil, a tubular baffle between said impeller and coil, said condenser being carried by said closure, a fan on the opposite end of said motor shaft adjacent said condenser, and means between said base and closure, supporting said coil, closure and condenser for raising said coil, closure and condenser relative to said other instrumentalities to bring said coil into registry with said opening and said closure into sealing engagement with said bottom wall peripherally of said opening whereby said coil is sealed within said refrigerated chamber, while said other instrumentalities are excluded therefrom.

12. In refrigerating apparatus of that type which includes a refrigerated chamber above a laterally accessible compartment for receiving a refrigerating unit, said refrigerated chamber having a bottom wall with an opening therethrough communicating with said compartment, a refrigerating unit for said refrigerated chamber housed in said compartment, comprising a platform supporting a motor, compressor and condenser, a closure for said opening, an annular evaporator coil mounted on the upper side of said closure, spaced therefrom, flexible conduit connections between said coil and said compressor and condenser, securing means coacting with the upper side of said bottom wall for fixing said coil within said opening and bringing said closure into sealing engagement with the lower side of said bottom wall peripherally of said opening, a tubular baffle supported upon said closure extending through said coil into said refrigerated chamber, having its lower end spaced from said closure and being apertured in a zone intermediate its length, a removable motor on the upper end of said baffle having a shaft extending through said baffle, and an impeller on said shaft at a point below said apertured zone.

13. In refrigerating apparatus of that type which includes a refrigerated chamber above a laterally accessible compartment for receiving a refrigerating unit, said refrigerated chamber having a bottom wall with an opening therethrough communicating with said compartment, a refrigerating unit for said refrigerated chamber housed in said compartment comprising the conventional instrumentalities and conduit connections therebetween constituting a Carnot type refrigeration system, said instrumentalities including an annular evaporator coil, a pan for receiving condensate from the surface of said evaporator coil, means forming a dished closure for said opening unitary with said coil and between said coil and the other instrumentalities of said system and said pan, having its dished side toward said coil, said coil and closure being movable relative to said other instrumentalities through the flexibility of said conduit connections without breaking said connections, a motor on the lower side of said closure carried thereby having its shaft extending through said closure and an impeller on said shaft extending within said coil, a tubular baffle between said impeller and coil, a drainage conduit communicating with the dished side of said closure discharging into said pan, and means between said base and closure supporting said coil and closure, for raising said coil and closure relative to said other instrumentalities for bringing said coil into registry with said opening and said closure into sealing engagement with said bottom wall peripherally of said opening whereby said coil is sealed within said refrigerated chamber, while said other instrumentalities are excluded therefrom.

14. In refrigeration apparatus of that type which includes a refrigerated chamber adjacent a laterally accessible compartment for receiving a refrigerating unit, said refrigerated chamber having a wall with an opening therethrough communicating with said compartment, a refrigerating unit for said chamber housed in said compartment comprising a motor-compressor-condenser component and an evaporator coil component, with refrigerant conduit connections between said components, said refrigerating unit being removable or replaceable as a unit laterally from or into said compartment without breaking said connections, said coil component including a closure for said opening between said coil and motor-compressor-condenser component, said coil being mounted on said closure, a tubular open ended baffle of smaller cross-sectional dimensions than said opening extending through said coil, and a pump within said baffle for re-circulating fluid heat

exchanging medium over said coil and through said chamber, and means for moving said coil component independently of said motor-compressor-condenser component to bring said closure into sealing contact with said wall peripherally about said opening whereby said coil is sealed within said refrigerated chamber while said motor-compressor-condenser component is excluded therefrom.

15. In refrigerating apparatus of that type which includes a refrigerated chamber having a laterally accessible compartment for receiving a refrigerating unit, said refrigerated chamber having a bottom wall with an opening therethrough communicating with said compartment, a refrigerating unit for said refrigerated chamber removably mounted in said compartment, comprising a base supporting the conventional instrumentalities and conduit connections therebetween which constitute a Carnot type refrigeration system, said instrumentalities including among others an evaporator coil and motor, means forming a closure for said opening unitary with said coil and between said coil and the other instrumentalities of said system, the motor being carried by said closure on its lower side, and having its shaft extending through said closure adjacent to said coil, an impeller on said shaft on the coil side of said closure, said coil, closure

and motor being movable together relative to the other instrumentalities through the flexibility of said conduit connection without breaking said connections, and adjustable elevating means between said base and closure, supporting said coil, closure and motor from said base, reacting oppositely against said base and closure for raising said coil, closure and motor as a unit, relative to said base, to bring said coil in registry with said opening and said closure into sealing contact with said bottom wall periphery of said opening whereby said coil is sealed within said refrigerated chamber while the other instrumentalities of said system are excluded therefrom.

WILLIAM E. ANGLIN.

REFERENCES CITED

The following references are of record in the file of this patent:

UNITED STATES PATENTS

Number	Name	Date
2,204,804	Heintzen	June 18, 1940
2,241,023	Tanner	May 6, 1941
2,245,234	Tanner	June 10, 1941
2,250,612	Tanner	July 29, 1941
2,387,622	Tanner	Oct. 23, 1945
2,407,159	Jones	Sept. 3, 1946