Jan. 21, 1964 P. LEMS 3,118,368

STRAP CHUTE

Filed June 23, 1961 3 Sheets-Sheet 1

Fig. 1.

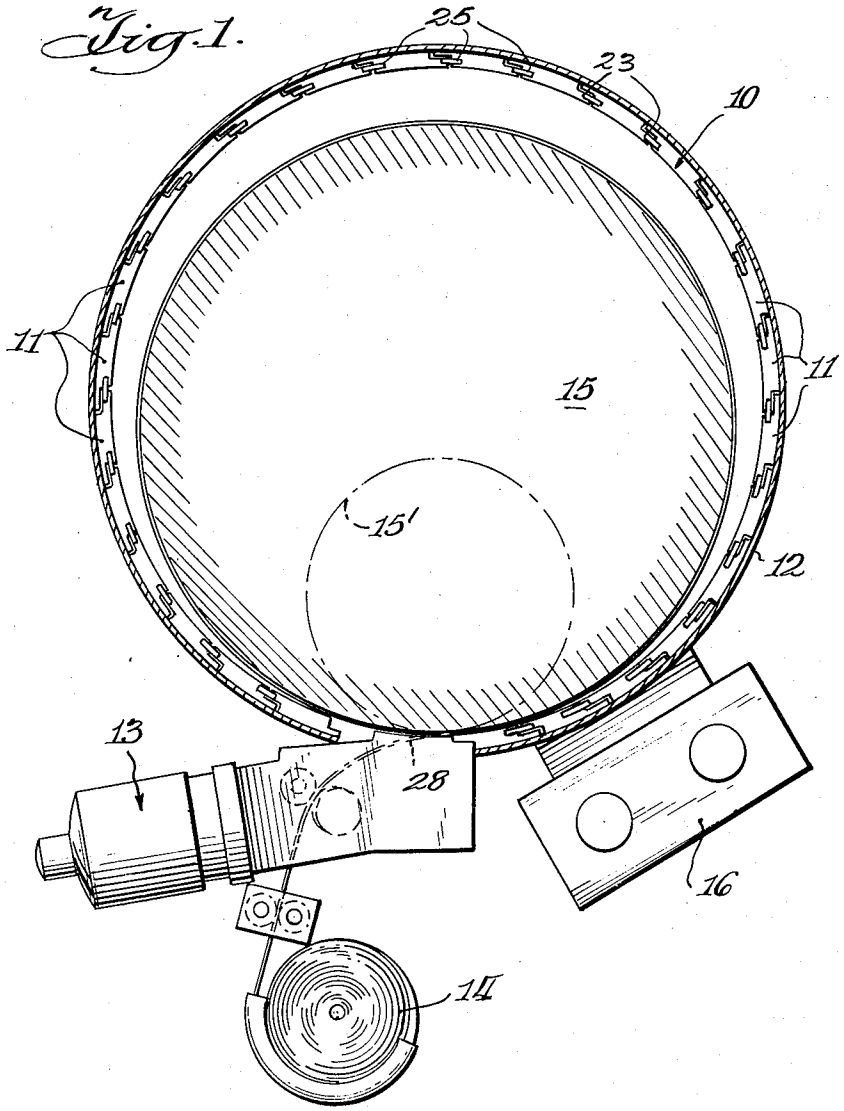

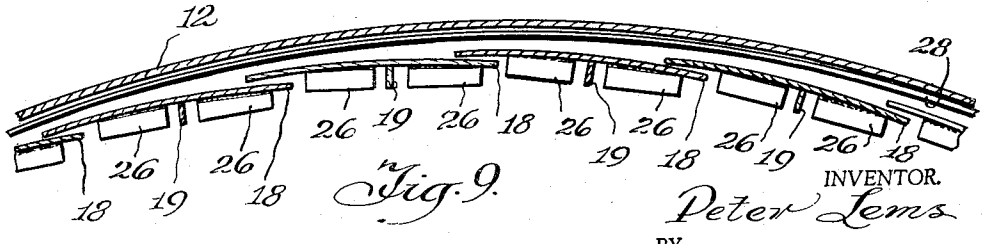

Fig. 9.

INVENTOR.

Peter Lems

BY

Schneider, Dressler, Goldsmith & Clement

Attorneys

Jan. 21, 1964 P. LEMS 3,118,368

STRAP CHUTE

Filed June 23, 1961 3 Sheets-Sheet 2

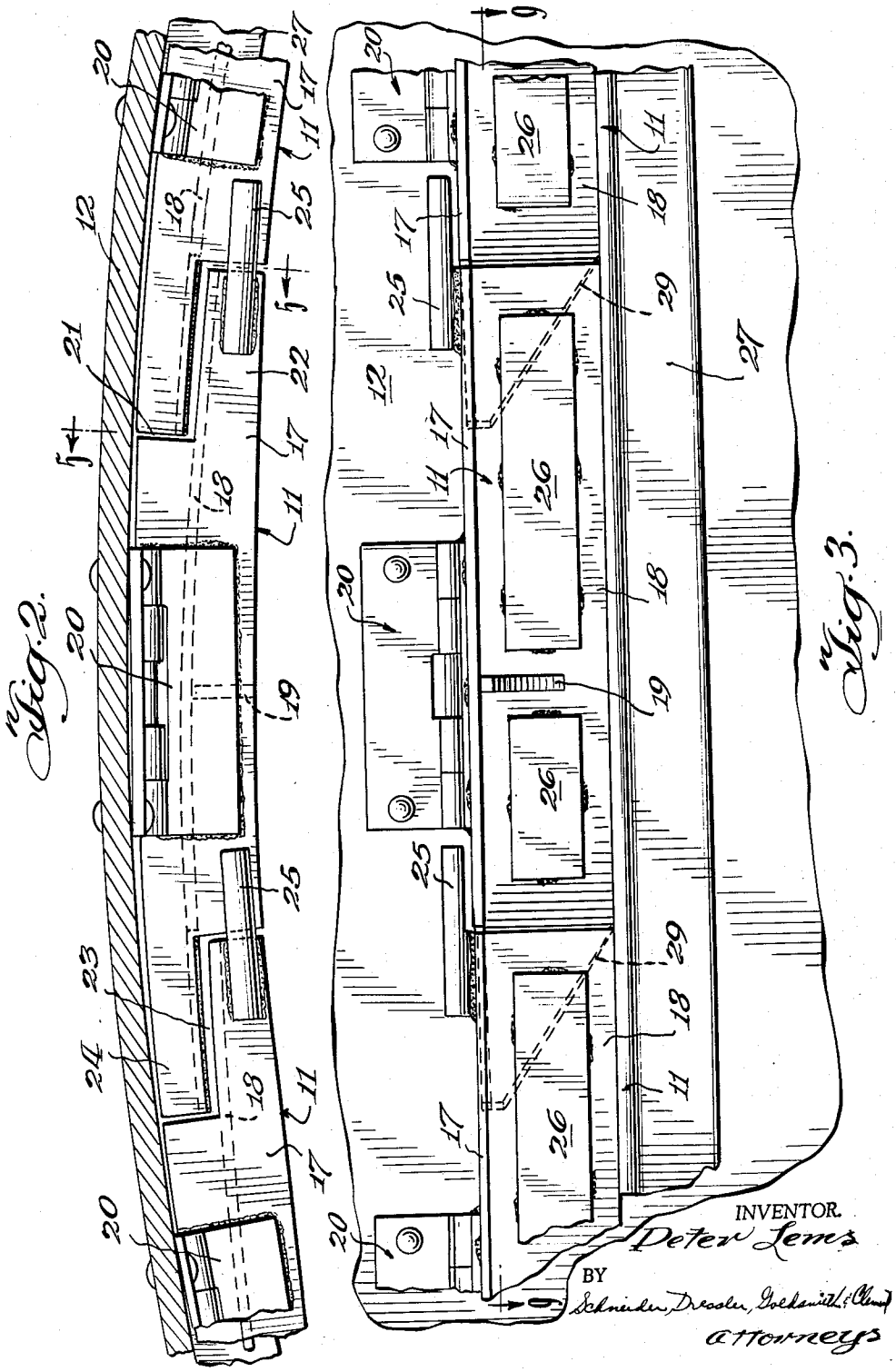

Fig. 2.

Fig. 3.

INVENTOR.
Peter Lems
BY
Schneider, Dressler, Goldsmith & Clement
Attorneys

Jan. 21, 1964 P. LEMS 3,118,368

STRAP CHUTE

Filed June 23, 1961 3 Sheets-Sheet 3

Fig. 6.

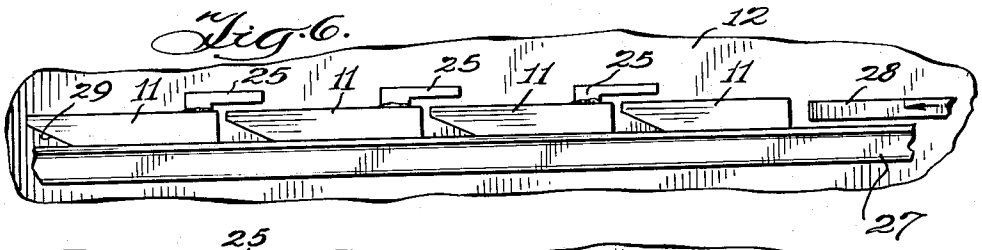

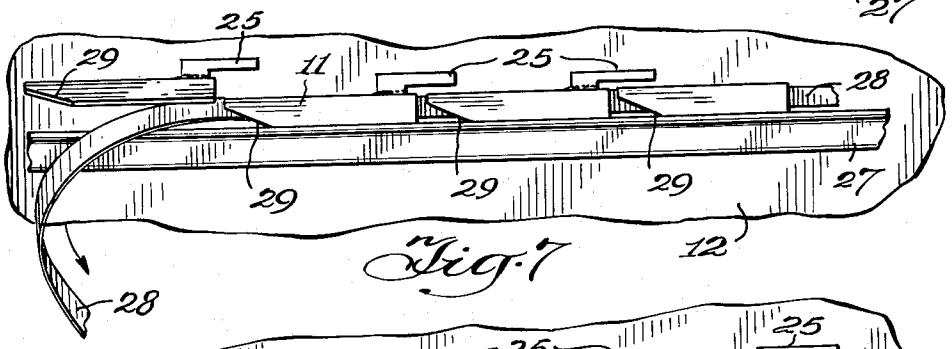

Fig. 7

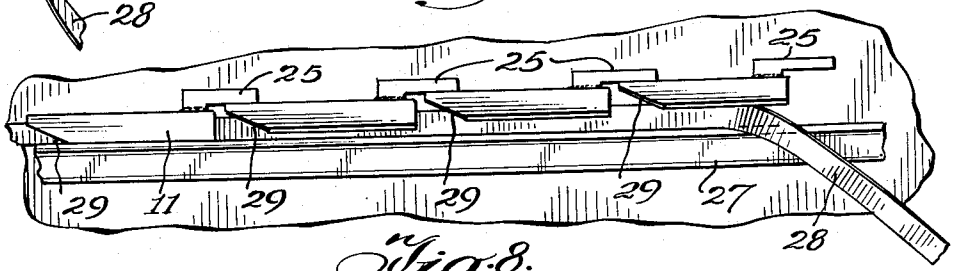

Fig. 8.

Fig. 4.

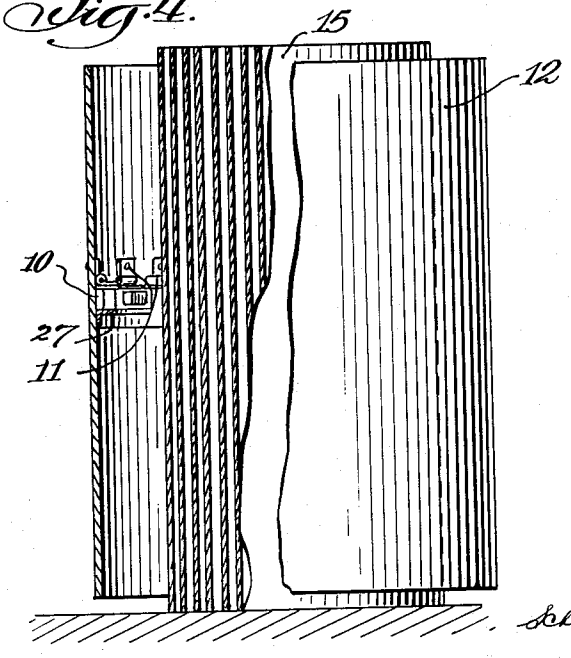

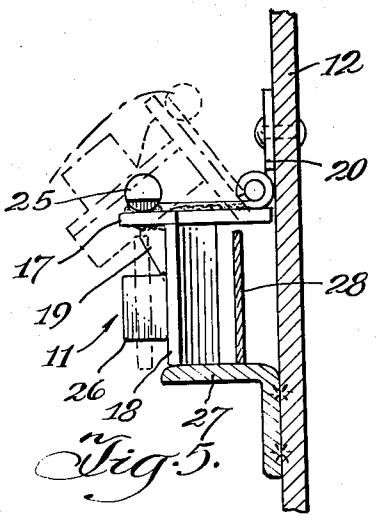

Fig. 5.

INVENTOR.

Peter Lems

BY

Schneider, Dressler, Goldsmith & Clement

attorneys

United States Patent Office 3,118,368 Patented Jan. 21, 1964

3,118,368
STRAP CHUTE

Peter Lems, Evanston, Ill., assignor to Signode Steel Strapping Company, a corporation of Delaware

Filed June 23, 1961, Ser. No. 119,146
6 Claims. (Cl. 100—26)

The present invention relates to strap chutes and more particularly to a chute construction and chute segments for releasably guiding a strap fed therethrough.

Broadly, the present invention is concerned with the art of packaging and securing packages together by means of ligatures such as steel strap. In automatic equipment the strap is fed through a guideway circumscribing the article or package about which the strap is to be tensioned and sealed with the overlapped ends thereof secured together.

The strap is normally fed forwardly through the chute or guideway until the free end overlaps the position where the strap is being fed into the guideway. The free end is then clamped by the strapping machine. With the free end held securely, the strap is tensioned in such a manner that it moves out of the chute toward the package. Tensioning of the strap continues until it is tautly disposed about the package. At that stage, the free end of the strap and the portion of the strap overlapping the free end are enveloped in a seal and the several parts are secured together by clamping. The excess strap is severed at the time the sealing operation is effected.

The particular aspect of the foregoing which forms the subject of the present invention, is the guideway or chute construction through which the strap is longitudinally fed to first loosely circumscribe the package and then from which the strap is withdrawn generally radially inward from the chute toward the package.

The basic requirements of a chute construction are that it must accept longitudinal movement of the strap during the feeding operation and then transverse movement during the tensioning operation.

Many forms of chute constructions are known and used. By-and-large these constructions employ a spring biased plate covering a channel. The plate may be substantially elongated or may be in a series of short sections.

Constructions embodying the present invention, however, avoid the mechanical complexity of spring biasing, provide a more positive guideway construction and open more conveniently during tensioning while holding a closed position more positively during strap feeding. Further, chute constructions embodying this invention are readily and conveniently adaptable to the formation of chutes of any desired configuration such as circular or rectangular.

In the illustrative embodiment of the invention described in detail hereinbelow and shown in the drawings, the chute is comprised of a plurality of novel interrelated chute segments cooperating to form a horizontal, circular chute. The chute segments may be interengaged to form a fully closed chute for guiding the strap and are individually pivotable to permit convenient, controlled peeling or removal of the strap from the chute.

The construction of the segments is such that, within broad limits, the dimensions thereof are not critical, the segments are readily replaceable and are so gravitationally operated that the closing force thereof is easily adjusted by the simple addition of weights thereto.

It will be readily observed that embodiments of this invention employ chute segments or covers that are individually articulated but which may be so interrelated as to cooperate in the holding of the strap, as well as in movement for peeling of the strap therefrom.

Numerous advantages and features of the present invention will be readily apparent in the following detailed description of the invention and an illustrative embodiment thereof and from the drawings in which each and every detail shown forms a part of this specification, in which like numerals refer to like parts and in which:

FIGURE 1 is a horizontal cross-sectional view of a strapping mechanism utilizing a chute construction embodying this invention;

FIG. 2 is an enlarged horizontal sectional view of a fragment of a chute construction and strapping machine shown in FIG. 1;

FIG. 3 is a fragmental elevational view of the portion of the strap chute shown in FIG. 2;

FIG. 4 is a broken, partly sectional, partly elevational view of a portion of the strapping machine and the strap chute;

FIG. 5 is a vertical, sectional view of the strap chute taken substantially along the broken line 5—5 of FIG. 2;

FIGS. 6, 7 and 8 are fragmental, elevational views similar to FIG. 3 but schematically illustrating the strap chute during strap feeding and strap tensioning, respectively; and

FIG. 9 is a fragmental, horizontal sectional view taken substantially along the line 9—9 of FIG. 3.

Articulated strap chutes embodying the present invention may be utilized in devices such as the one shown in FIGS. 1 and 4, wherein the chute 10 is composed of segments 11 hingedly mounted on a cylindrical securing wall 12.

The cylindrical wall in the illustrative machine shown, carries a power strapping machine 13 which is effective to feed strap from a reel supply 14 thereof forwardly through the chute 10, grip the free end of the strap, tension the strap about a package 15, shear the excess strap and seal and crimp the overlapped ends of the strap. This entire mechanism is mounted on a jack column 16 so that it may be raised or lowered to a position above or a selected position about the package 15 which, for illustrative purposes, is shown in FIG. 4 as a coil of steel or other wound material. A second package 15' is shown in broken lines in FIG. 1 to illustrate the capacity of the machine to strap various sizes and shapes of packages.

The chute 10 extends about the entire inner periphery of the supporting wall 12 so that it may receive strap directly from the power strapping machine 13 and guide the strap completely about the package 15, circumscribing the same, to a position where the free end of the strap is fed back to the power strapping machine 13. It will be appreciated, however, that the particular machine and arrangement shown is merely illustrative and that articulated and segmented chutes embodying this invention may be used with a wide variety of strapping machines and may assume a wide variety of configurations that may completely or only partially circumscribe the package about which the strap or ligature is to be tensioned and sealed.

As noted above, the chute 10 is composed of a plurality of interrelated articulated chute segments, the preferred form of which is shown in FIGS. 2, 3, 5 and 9.

The individual segments 11 are generally L-shaped in cross-sectional configuration and are provided with a top wall 17 and a dependent front wall 18. The top wall preferably extends beyond the outer face of the front wall 18 and a brace 19 is secured to both walls to reinforce the perpendicular relation therebetween.

The segments are secured at the midpoint thereof to the outer wall or support wall 12 by hinges 20 having one leg secured to the top wall 17 and the other leg secured to the support wall 12 with the hinge pin extending longitudinally of the segment adjacent to the support wall.

The securing means employed for attaching the hinges 20 to the support wall 12 may be any desired securing means, such as welds or rivets or bolts. It is preferred,

however, that the means employed to secure the hinges to the support wall are readily removable and replaceable so that the chute segments may be moved or replaced as desired.

The segments are interrelated in a number of ways so as to be cooperative and provide a complete, fully closed chute for guiding strap therethrough, even when the free end of the strap is badly kinked or curled, and to permit ready and convenient removal of the strap from the chute in a transverse direction.

The top plates of the segments are formed with complementary recesses and projections **21–24**, inclusive, so that the projections **22** are of the same configuration as the recesses **23** and complementary to the projection **24**. The front plate **18** extends from the outer end of the projection **24** to the outer end of the projection **22** at the opposite end of the segment along a line which is not parallel to the outer support wall **12** but which is at a small, acute angle with respect to that wall so that the ends of the plate are offset by the thickness thereof. By this construction, the ends of the front plates **18** of adjacent segments are overlapped to insure against interference with the movement of strap through the chute in a direction toward the closer proximity end of the front plates with respect to the support wall.

On the projections **22** at the trailing ends of the top plates **17** there are secured overlap pins **25** which project in a trailing direction from the projections **22** and overlie the leading ends of the adjacent chute segments.

The overlapped ends of the front plates and the overlap pins cooperate to provide an interrelation between adjacent chute segments which provides a strong holding force and opposition to outward movement or releasing movement of the chute segments when the strap is being fed forwardly therethrough. Any force tending to open a chute segment, such as may occur when the end of the strap is bent or kinked or curled, is opposed by the weight of succeeding segments acting against the top plate by the pin on the next adjacent segment and acting against the front plate by the overlapped end of the next segment. The weight of the segments providing this closing action and holding action is variable as desired, and may be increased by supplemental weights **26** secured to the outer faces of the front plates **18**. These weights may be secured in position by any desired convenient means.

The operating characteristics of the chute segments may be best understood with reference to the illustrations of FIGS. 6, 7 and 8 and comparison thereof with FIGS. 3 and 5. In these figures, it is shown that when the segments are in their normal, closed position the front plate and the top plate of each segment forms a closed channel with the mounting face of the support wall **12** and with the upper face of a channel bottom member **27** forming a stop for downward pivotal movement of the chute segments enclosing the bottom of the channel so formed. This channel bottom member, in the illustrative embodiment of the invention shown in the drawings, is an arcuately formed angle member having one leg secured to the support wall and the other leg projecting perpendicularly to the wall, a distance at least as great as the maximum distance between the support wall and the bottom edge of the front plate when the front plate is in a normal position, as shown in solid lines in FIG. 5.

When a strap **28** is fed forwardly in the direction of the arrow thereon in FIG. 6, the leading end thereof progresses through the closed channel, provided by the segments **11**, the securing wall **12** and the channel bottom member **27**. If the end of the strap is curled or bent it will be guided, nonetheless, through the chute since it cannot escape by virtue of the overlapped relation of the front plates and the inner engagement of the top plates through the mechanism of the overlap pins **25**.

When, however, it is desired to withdraw the strap

during tensioning, the segments through the mechanism of the hinges 20, move pivotally upwardly successively, either as shown in FIG. 7, or as shown in FIG. 8, depending upon the character of the application of the tensioning force. When the strap is withdrawn by tensioning in the manner shown in FIG. 7, the segments will lift, substantially individually, and pivot upwardly to the dotted position shown in FIG. 5 as the strap first rides under the beveled edge **29** provided at the leading end of the front plates **18**.

The more common manner of tensioning, however, effects a general peeling manner of strap action from the chute by progressing from the trailing ends of the segments, as shown in FIG. 8. With this manner of tensioning, the strap moves outwardly, pivotally moving the segments upwardly but in a manner restraining free movement of the strap by virtue of the weight provided on each segment from the succeeding segments. This also provides for successive, gradual raising of several segments ahead of the one from which the strap is being removed whereby the peeling action is a smooth, progressive action. Also, the segments are lowered smoothly and easily as they ride down on the beveled forward edge thereof.

It will be readily seen from the foregoing that chutes and chute segment constructions embodying this invention are simple, rugged and efficient and that numerous modifications and variations thereof may be made without departing from the true spirit and scope of the novel concepts and principles of this invention.

I claim:

1. An articulated strap chute comprising a wall structure, an elongated, substantially rigid strap chute base rigidly secured to said wall structure and extending outwardly therefrom at right angles, and a plurality of chute covers each having a top wall movably secured to said wall structure over said base in parallel relationship to said base, said chute covers being longitudinally disposed with respect to said base, said base and said chute covers being cooperatively arranged to form a channel against said wall structure, said channel being open only at the ends of said chute covers and having a height equal to the distance between said top wall and said base.

2. An articulated strap chute comprising a support wall having a front surface, a plurality of individual chute cover elements L-shaped in cross section extending along the front surface of said wall structure and disposed therealong to form a guideway parallel to the front surface of said support wall, and a plurality of hinges securing said individual covers to the front surface of said support wall for individual pivotal movement and release of strap disposed between the chute cover elements and the front surface of said wall structure.

3. An articulated strap chute comprising a plurality of juxtaposed chute covers, a vertical supporting wall structure having a front surface, individual hinges having substantially horizontal axes securing each of said chute covers to the front surface of said wall structure at the top of the chute covers, said chute covers being L-shaped in cross section and disposed to gravitationally close downwardly to form a chute in cooperation with the front surface of said wall structure.

4. An articulated strap chute comprising a plurality of juxtaposed chute covers, a vertical supporting wall structure having a front surface, individual hinges having substantially horizontal axes secured to the front surface of said supporting wall structure, said hanges securing each of said chute covers to said wall structure at the top of the chute covers, said chute covers being L-shaped in cross section and disposed to gravitationally close downwardly to form a chute in cooperation with the front surface of said wall structure, means on the upper surface of each of said chute covers overlying an immediately adjacent chute cover to interengage the chute covers.

5. An articulated strap chute comprising a plurality of juxtaposed chute covers, a vertical supporting wall structure having a front surface, individual hinges having substantially horizontal axes secured to the front surface of said supporting wall structure, said hinges securing each of said chute covers to said wall structure at the top of the chute covers, said chute covers being L-shaped in cross section and disposed to gravitationally close downwardly to form a chute in cooperation with the front surface of said wall structure, each of said chute covers having an outer wall, said chute covers being arranged with the outer walls thereof in overlapping relation.

6. An articulated strap chute comprising a plurality of juxtaposed chute covers, a vertical supporting wall structure having a front surface, individual hinges having substantially horizontal axes secured to the front surface of said supporting wall structure, said hinges securing each of said chute covers to said wall structure at the top

of the chute covers, said chute covers being L-shaped in cross section and disposed to gravitationally close downwardly to form a chute in cooperation with the front surface of said wall structure, means on the upper surface of each of said chute covers overlying an immediately adjacent chute cover to interengage the chute covers, each of said chute covers having an outer wall, said chute covers being arranged with the outer walls thereof in overlapping relation.

References Cited in the file of this patent

UNITED STATES PATENTS

1,357,883	McChesney	Nov. 2, 1926
2,215,121	Harvey et al.	Sept. 17, 1940
2,632,381	Buckland	Mar. 24, 1953
2,780,986	Ritenour	Feb. 12, 1957
2,853,938	Hall et al.	Sept. 30, 1958
2,908,215	Fawcett	Oct. 13, 1959