Oct. 18, 1949. M. DEBREY 2,484,934

ALTERNATING CURRENT RELAY

Filed Oct. 15, 1946 4 Sheets-Sheet 1

FIG. 1

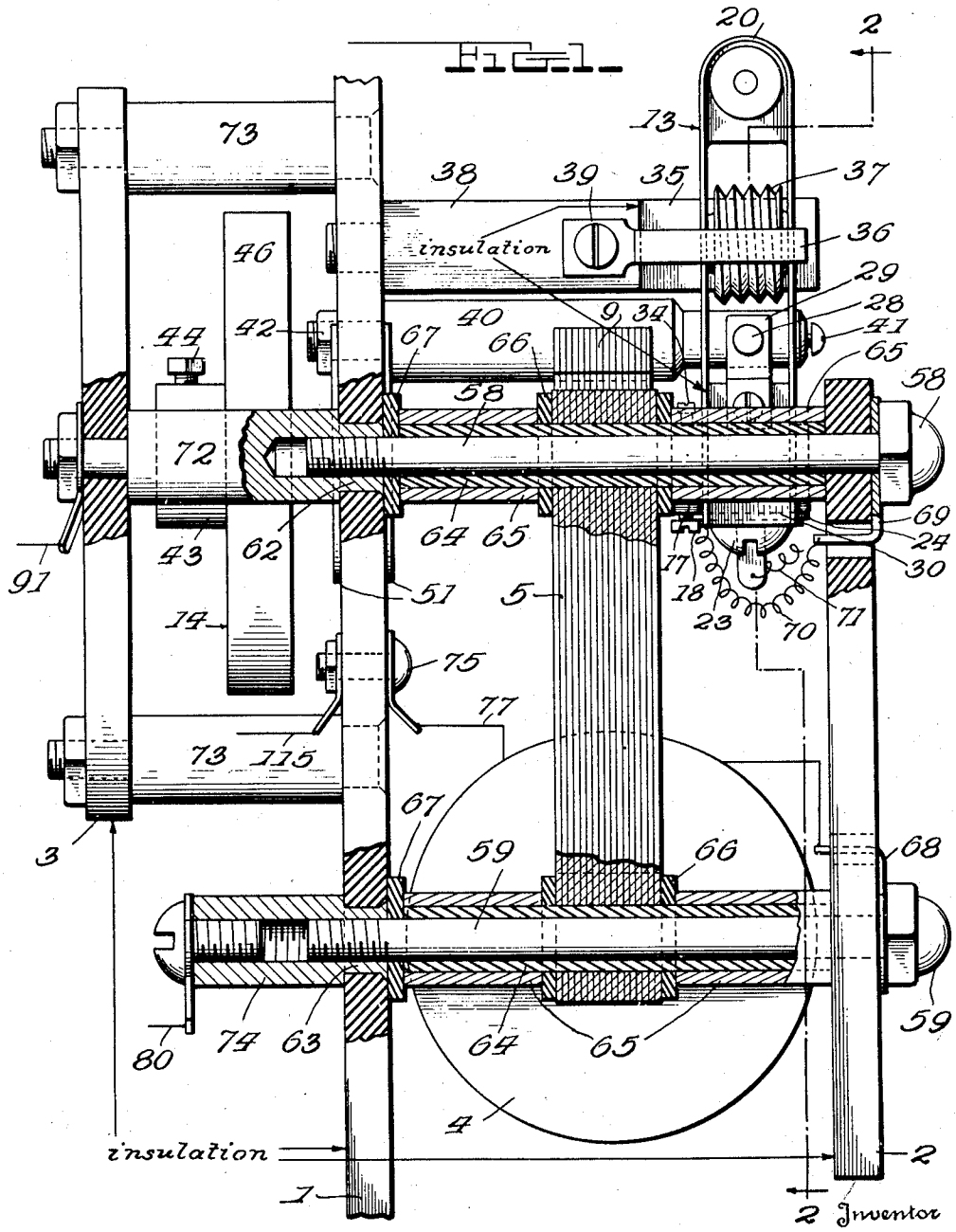

Inventor

Michael Debrey

By H. B. Wilson & Co.

Attorney

Oct. 18, 1949. M. DEBREY 2,484,934

ALTERNATING CURRENT RELAY

Filed Oct. 15, 1946 4 Sheets-Sheet 2

FIG. 2

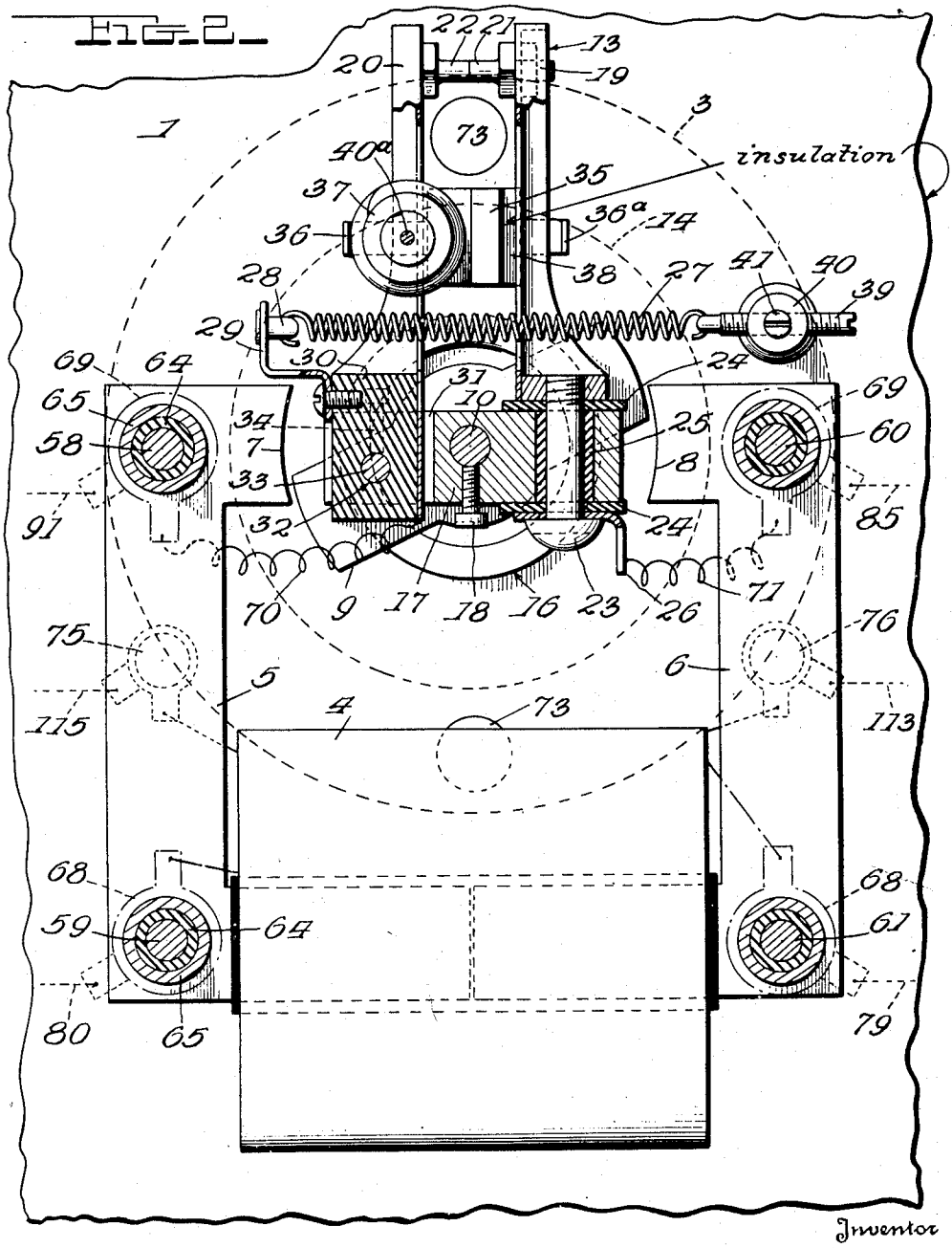

Inventor

Michael Debrey

By H. B. Wilson & Co.

Attorney

Oct. 18, 1949. M. DEBREY 2,484,934

ALTERNATING CURRENT RELAY

Filed Oct. 15, 1946 4 Sheets-Sheet 3

FIG. 3

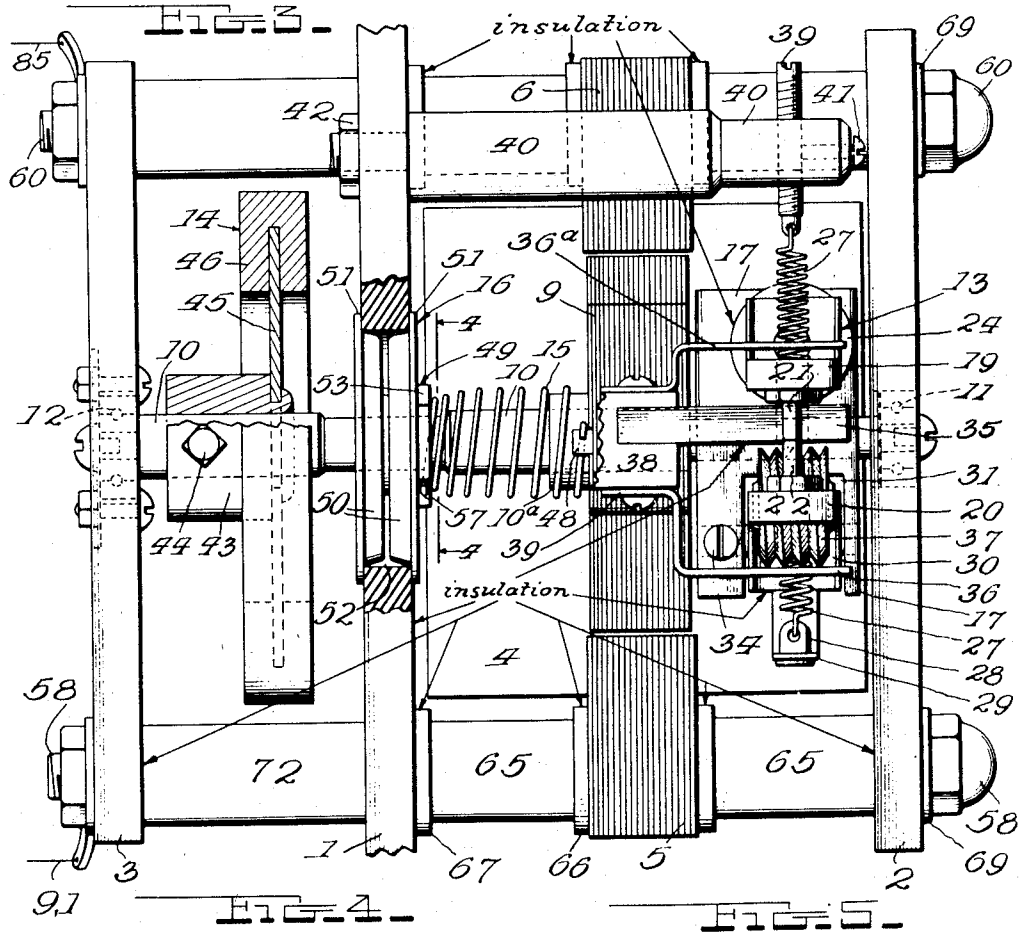

FIG. 4

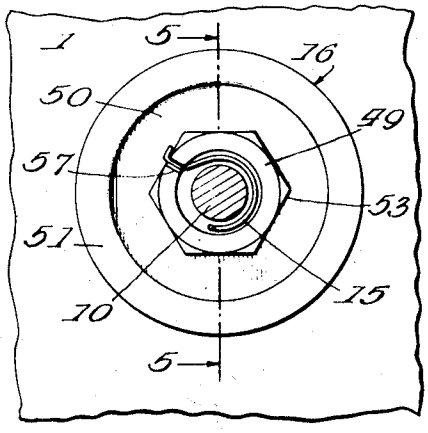

FIG. 5

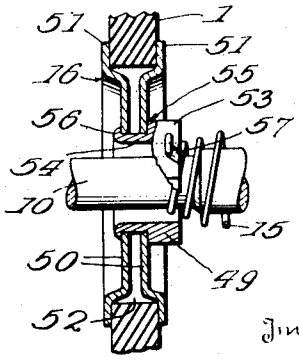

Inventor

Michael Debrey

By H. Bewilson & Co.

Attorney

Oct. 18, 1949. M. DEBREY 2,484,934

ALTERNATING CURRENT RELAY

Filed Oct. 15, 1946 4 Sheets-Sheet 4

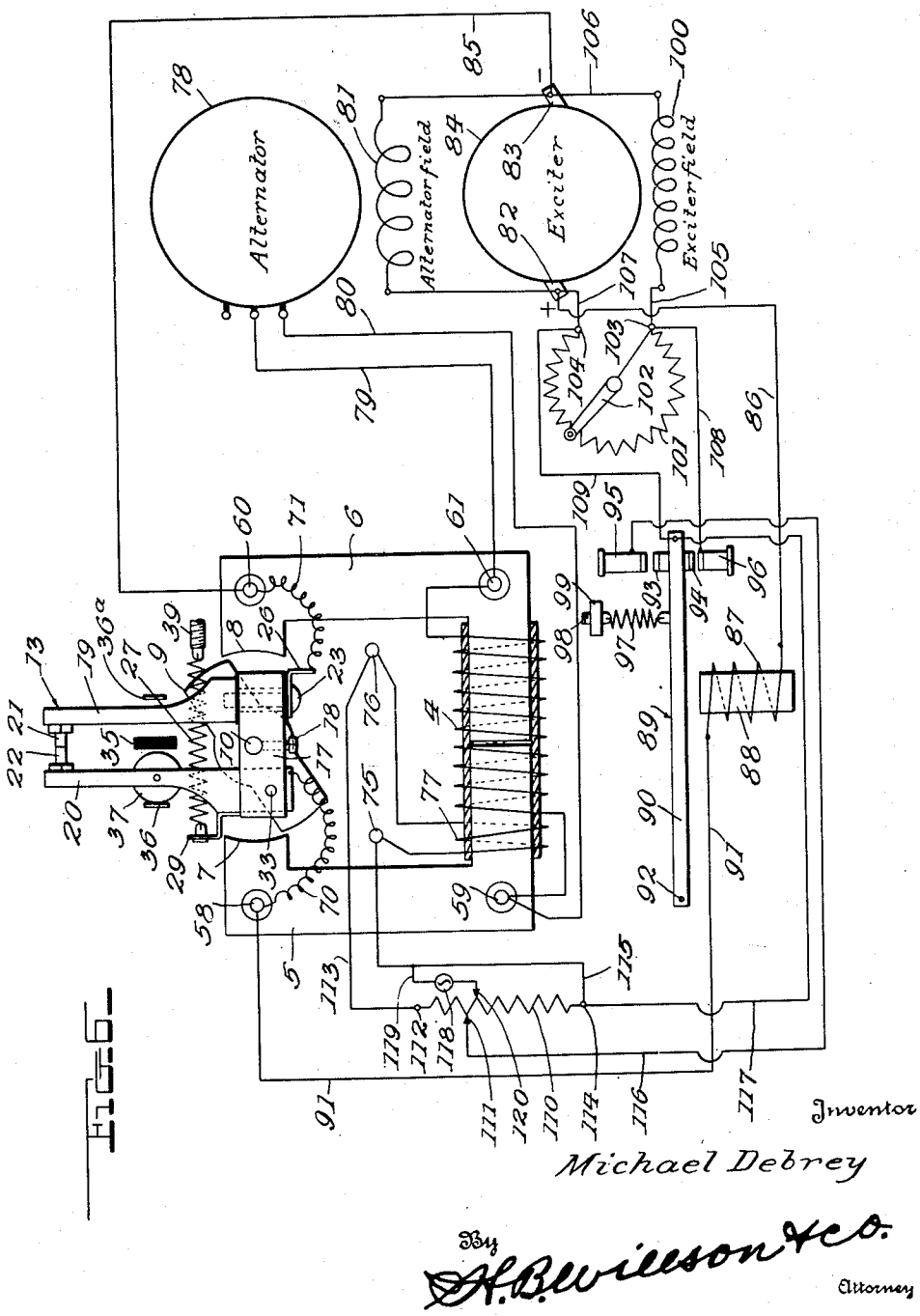

FIG. 6

Inventor
Michael Debrey
By H. B. Wilson & Co.
Attorney

Patented Oct. 18, 1949 2,484,934

UNITED STATES PATENT OFFICE

2,484,934

ALTERNATING CURRENT RELAY

Michael Debrey, East Moline, Ill.

Application October 15, 1946, Serial No. 703,409

23 Claims. (Cl. 200—91)

1

My invention relates to improvements in alternating current generator voltage regulators of the type wherein a resistance in series with the field winding of the direct current exciter is intermittently short-circuited so as to keep the field excitation of the alternator supplied from said exciter at the proper value to maintain the desired output voltage of the alternator.

The invention presents improvements over the voltage regulator of my Patent 2,324,370, July 13, 1943, in which the vibrations were in synchronism with the alternations of the alternating current to which it was connected, that is, vibrated twice for each cycle; but in the present invention, it is desired to produce a slow vibrating regulator by which alternating current generators of relatively large size can be handled at a slow vibration of approximately between 200 and 500 vibrations per minute. To obtain such a voltage regulator of slow vibrating character, vibrating at a frequency other than the frequency of the alternator, I provide an improved vibrating or oscillating contact mechanism on the pivot of which is a ballast wheel or weight having predetermined characteristics to cause the regulator to vibrate at the desired speed usually below 500 vibrations per minute, and I utilize the voltage regulator circuit as disclosed in my Patent 1,989,084, January 29, 1935. Synchronous voltage regulators cannot usually handle alternators larger than 100 kw. requiring a 2½ kw. exciter, because of arcing on the regulator contacts.

The invention contemplates improvements in various details of such regulators, such as vibratory contact making and breaking mechanism and the use of the frequency suppression ballast wheel or weight as above noted, and also an improved means for adjusting the spring which moves the vibrating armature of the regulator against the magnetic pull of two pole pieces to permit the regulator to be adjusted or calibrated for the desired voltage operation, an improved means for preventing the sticking or sluggish operation of the regulator when used in power plants where oily vapors abound, and an improved construction for removably mounting the A. C. coil of the regulator so that if it is burned out or damaged, it may be readily replaced with a new coil without affecting any calibrated or adjusted elements of the regulator or removing it from the switchboard, and hence, such replacement may be done by an unskilled mechanic.

While as above indicated, one important object of the invention is to provide a regulator of the

2

vibratory contact type which will handle large field currents so that large alternators can be regulated, another important object is to provide a regulator of this type which will be of low cost to manufacture, and at the same time be efficient in operation.

Other objects and advantages of the invention will in part be stated specifically in the present specification and the drawings accompanying the same, and in part will be self-evident from the disclosure.

In the accompanying drawings which illustrate a preferred embodiment of the invention,

Figure 1 is a side view partly broken away and in section of an improved regulator;

Fig. 2 is a vertical section on the plane of line 2—2 of Fig. 1;

Fig. 3 is a top plan view with parts broken away and in section;

Fig. 4 is a detail section on line 4—4 of Fig. 3;

Fig. 5 is a detail section on line 5—5 of Fig. 4;

Fig. 6 is a diagrammatic front elevation showing the main structural parts of the instrument and indicating the circuits and electrical devices connected thereto.

Referring specifically to Figs. 1, 2 and 3, it will be seen that the frame of the instrument includes a main supporting plate 1, a front plate 2, and a rear plate 3, all formed of insulation and rigidly spaced from each other as hereinafter described and as shown more particularly in Fig. 1. Between plates 1 and 2 is positioned a main magnetizing coil or winding 4 supported on the spaced lower arms of two laminated core members 5 and 6, the upper arms of which have concave pole faces 7 and 8 spaced apart for the free oscillation of a laminated armature 9 between them. The lower arms of core members 5, 6 have their ends within the A. C. coil in close juxtaposition as shown in Fig. 6. The core members 5, 6 form a U-shaped magnetic core or frame from which coil 4 may be insulated as seen in Fig. 2. Armature 9 is fixed to a forwardly and rearwardly extending pivot or shaft 10 which has its ends mounted in ball bearings 11 and 12 suitably secured in plates 2 and 3 respectively, as shown in Fig. 3. Also fixed to shaft 10 and positioned between front plate 2 and armature 9 is a vibratory make-and-break contact mechanism generally indicated at 13; and to said shaft is further fixed a ballast wheel 14 disposed between plates 1 and 3 as seen in Fig. 3. Hence, shaft 10, armature 9, contact device 13 and ballast wheel 14 form a vibratory unit, the parts of which will be more fully described. Instead of using

wheel 14 which is in the nature of a balance wheel, I may employ two or more ballast weights spaced equally around and suitably secured to shaft 10 or any other equivalent structure.

The alternating current passing through coil 4 produces an alternating magnetic flux through core sections 5, 6 and armature 9 tending to draw said armature periodically into line with pole faces 7, 8 and against the action of a helical or torsion spring 15 shown in Fig. 3. Spring 15 surrounds shaft 10 and has one end anchored to the unit and preferably to armature 9 and its other end anchored to an adjusting device indicated generally at 16, and hereinafter described, said device being mounted in an opening in plate 1 and having an opening through which shaft 10 extends as shown in Fig. 5. Spring 15 is set to normally urge the ends of armature 9 away from pole faces 7, 8 as shown in Fig. 2 and by adjusting device 16 as hereinafter described, the spring can be wound to a desired strength for calibration or adjustment of the vibrating armature 9 and against the pull of the magnetic poles 7, 8 at a given voltage of the alternator which is to be regulated and whose output voltage is applied across the winding 4.

The make-and-break contact mechanism 13 preferably includes a base block 17 apertured between its ends to receive shaft 10 to which it is fixedly secured by a screw 18 as seen in Fig. 2. Rising from opposite ends of the base or cross block 17 are upright arms or supports 19, 20 which carry the two vibratory contacts 21, 22. These vibratory arms are preferably of open sheet metal formation to keep the air resistance as small as possible and the two contacts which may have the usual platinum tips, are adjustably mounted by means of nuts applied to their threaded ends on opposite sides of the arms as shown in Fig. 2. Arm 19 which carries contact 21 is rigidly fixed to block 17 and hence vibrates in synchronism with armature 9. It is secured by a screw 23 which passes through an opening in block 17, said screw being threaded in the lower solid portion of arm 19 as shown in Fig. 2. Arm 19 is completely insulated from other parts by the use of washers 24 and a sleeve 25 of insulating material as shown in Fig. 2. A conductor attaching clip 26 is clamped beneath the head of screw 23.

The arm 20 which carries contact 22 is pivotally mounted on block 17 and is urged in a direction to move contact 22 toward contact 21 by a coil spring 27. The latter extends through the open portions of arms 19, 20 and has one end hooked into a pin 28 which is swiveled or rotatably mounted on the upper end of an angle bracket 29. The lower end of bracket 29 is secured by a screw, as seen in Fig. 2, to a block of insulation 30 which fills and is secured in the channel-shaped lower end of arm 20. Said lower end is disposed in a recess 31 formed in one end of block 17 and is formed with an opening 32 for a pivot pin 33 on which vibrating arm 20 swings. Pivot pin 33 is secured in the recessed or bifurcated end of block 17 by a set screw 34 shown in Figs. 2 and 3. The swinging or vibratory movement of arm 20 on its pivot 33, which of course is independent of the general vibratory movement of the entire unit 13 with armature 9, is limited in one direction by a central rigid stop 35 and in the opposite direction by an outside yielding or spring stop 36, these stops coacting with a roller 37 mounted on said arm 20, as shown in Fig. 2.

Stop 35 is in the form of a flat faced block of insulation disposed between arms 19, 20 and having one end secured in a supporting post or bracket 38 rigidly secured to main plate 1 as seen in Fig. 1. Yielding stop 36 comprises a flat spring metal arm forming the free end of an angle bracket 39 secured by a screw to post 38. This spring stop 36 functions to yieldably hold the roller 37 and hence contact 22 in case a very heavy load is thrown upon the alternator which supplies current to coil 4 as hereinafter explained. While such heavy load is connected, contacts 21, 22 will be held tightly engaged by the action of stop 36. If desired, I may employ a spring stop 36a similar to stop 36 to limit the movement of arm 19 in one direction as shown in Figs. 2 and 3.

Roller 37 which is disposed in the open portion of arm 20, is rotatable on a pivot pin 40a having its ends secured in the side portions of said arm, the arrangement being such that when contacts 21, 22 are engaged with each other in the position shown in Fig. 2, roller 37 is in contact with stop 36. When armature 9 moves in a clockwise direction under the action of the magnetic flux in core 5, 6, arm 20 can follow arm 19 only to a limited extent because roller 36 will bump against stop 35 to separate contacts 21, 22 and will roll on the flat face of stop 35 as arm 20 moves vertically due to the offset position of pivot 33 with respect to pivot or shaft 10. When the regulator is not in use, torsion spring 15 forces the entire vibratory unit toward spring stop 36, and since the latter will yield, arm 19 through the engagement of its contact 21 with contact 22, will force arm 20 so far that finally arm 19 is against stop 35 and roller 37 is against stop 36. At this time, there is a wide opening between roller 37 and stop 35. The only time that roller 37 touches stop 35 is when the magnetic flux pulls armature 9 towards poles 7, 8. It will be understood that when the instrument is in use, armature 9 is constantly vibrating and that the separation of contacts 21 and 22 may be from .001 to .060 thousandths of an inch, depending on load carried. The space between spring stop 36 and the adjacent side of fixed stop 35 is greater than the diameter of roller 37 and hence the contacts 21 and 22 will remain in engagement with each other as the unit vibrates and changes its position until roller 37 bumps against fixed stop 35. In other words, the distance which the two contacts travel together is dependent upon the space provided for the travel of roller 37 between stops 35 and 36 and that space thus controls the time at which the contacts will break. Hence, these contacts are engaged while armature 9 is shifting away from poles 7 and 8 and will remain engaged until poles 7 and 8 pull armature 9 back far enough to cause roller 37 to bump stop 35 to separate said contacts 21 and 22. With this construction, I obtain a good wide opening and not a rubbing contact on each make-and-break of contacts 21 and 22. The regulator must be adjusted or calibrated while it is in operation and contact arm 20 must be set for pressure by spring 27 in order that the right amount of pressure be applied to the two contacts. Also the right amount of pull must be exerted on arm 20 so that it can yield under the pressure of contact 21 against contact 22. If too much pull is applied by spring 27, contact 21 will tend to rebound as soon as it hits contact 22, but by applying the correct pull by spring 27, contact 22 will always back up under the pressure of contact 21 and as it backs up, it takes so much time, and to come back again to a point where bumping roller 37 hits fixed stop

35 will take some time, and this time is required for the core of the field relay hereinafter described to get properly charged by its winding.

While the periphery of roller 37 which is cylindrical may be smooth when the regulator is to be used under more or less ideal conditions, said periphery is preferably formed with coarse pitch screw threads of V-shape as shown so that only the sharp edges of the screw threads contact with stop 35. Instead of screw threads, I may of course use parallel V-shaped ribs. This construction prevents the regulator from becoming sluggish and the roller from sticking to stop 35 as it bumps against the latter to cause contacts 21, 22 to open. These regulators are frequently used in power plants where oily vapors settle on everything, and it has been found that when the roller is provided with a threaded or ribbed surface so that only the sharp edges of the threads or ribs touch the stop or bumper 35, there is no tendency of the parts sticking even though the surface of 35 is oily.

While one end of spring 27 is anchored to swiveled pin 28, its other end is hooked onto an adjusting screw 39 which is threaded transversely through a post 40 and said screw 39 may be locked in an adjusted position by a set screw 41 in the front end of post 40. The latter extends forwardly from main plate or panel 1 to which it is fixed by a nut 42 on the reduced threaded end of the post as seen in Fig. 3. The tension of spring 27 is set when the instrument is calibrated or adjusted to operate at the desired number of vibrations per minute.

While the ballast wheel or weight 14 may be of any suitable construction, it preferably comprises a hub 43 apertured to receive shaft 10 to which it is fixed by a set screw 44 as shown in Fig. 3, a web or disk 45 suitably fixed to the hub and a heavy annular rim 46 which is preferably of lead and molded on the periphery of the web. The weight of the ballast wheel is a substantial one and is determined according to the power or magnetomotive force of coil 4 so that it and the vibratory unit of which it forms a part, cannot oscillate at a speed higher than 700 per minute without the application of external force. Because of the natural mechanical frequency of the ballast wheel or weight, the tendency for synchronous vibration which the A. C. current would cause on armature 9 is ironed out or reduced and the magnetic field causes the vibratory unit to vibrate at the desired slow motion of from 200 to 500 vibrations per minute. The ballast wheel, weight or equivalent element 14 as above indicated serves to iron out the ripples of oscillation caused by the A. C. magnetic wave exerted upon armature 9, and I believe its use might be compared with the use of a ballast condenser used across the terminals of a rectifying system where A. C. voltage is rectified into D. C. voltage by vacuum tubes, since such a ballast condenser irons out the ripples that are ordinarily left in the A. C. voltage by the tube which rectifies the A. C. voltage into D. C. current. The proper size of the ballast element can be determined by putting a given weight to vibration under a given amount of power and noting its action, but as a formula for determining its weight, I would say that for a two inch diameter ballast element, the total weight would be between three and one-half and four ounces, and the amount of power applied to vibrate the total assembly provided for the make-and-break of the contacts would have to be approximately four hundred and fifty magnetic lines of force per square centimeter.

The speed of vibration of armature 9 can be controlled by the adjustment of spring 27. Spring 15 is used for calibrating or adjusting the contacts against the A. C. magnetic pull exerted on armature 9. Spring 15 may be centered on shaft 10 by a sleeve or collar 10a positioned within it and suitably secured to the shaft. Spring 15 may have one end anchored to the vibratory unit by hooking said end to a lug 48 on armature 9 as seen in Fig. 3. Lug 48 may be formed by making parallel slits in the adjacent endmost lamination of the armature and bending out the portion between said slits. The spring adjusting device 16 to which the other end of spring 15 is anchored comprises a sleeve or hub 49 and two friction disks 50 as shown in Fig. 5. The two opposed disks 50 have offset annular flanges 51 which form depressed or cup-shaped portions that project into a circular opening 52 formed in main plate 1, the two flanges being in frictional engagement with the opposite sides of said plate as seen in Figs. 3 and 5. Sleeve 49 through which shaft 10 passes freely has a hexagonal or other wrench-engaging portion 53 at one end and a reduced portion 54 providing the sleeve with a shoulder 55. The disks 50 are centrally apertured to receive portion 54, one disk seating against shoulder 55 and the other being secured by riveting or spinning outwardly the end of portion 54 as shown at 56. The latter operation is performed while the flanges 51 are in tight engagement with plate 1 so that the spring adjusting device 16 will be frictionally held in any position to which it may be rotated by a wrench or other tool applied to portion 53, the frictional engagement being much greater than any force that ever could be exerted by spring 15. The part 53 is formed with an angular notch 57 in which the end of the spring may be hooked to anchor the latter. It will thus be seen that by rotating part 53 of the friction adjusting device 16 in the proper direction, spring 15 may be adjusted to offer the proper resistance to the magnetic pull of pole pieces 7, 8 on armature 9 for any given voltage; and hence, the desired voltage to be maintained can be changed to any point desired for operation of the alternator.

It happens at times that A. C. coil windings in regulators of this type burn out or become damaged and need to be replaced with new coils. With regulators now on the market, the coils cannot be replaced without removing the regulators from the switchboards and without upsetting the calibrated elements of the instruments. Since only highly skilled persons can properly calibrate voltage regulators, it is usually necessary to return such instruments to the factory, when they need new coils. With my present invention, the construction is such that the magnetizing winding or coil 4 may be quickly and easily replaced without disturbing the calibrated elements and without removing the regulator from the switchboard, and hence, such replacement may be done by the ordinary mechanic or electrician.

As previously stated and as shown in Fig. 2, coil 4 is supported on the inturned lower arms of core sections 5, 6, and the above stated advantage is attained by making either of said core sections readily removable so that when one is removed on either side, the damaged coil may be slipped off of the arm of the other fixed core section, a new coil slipped into position and the removed core section then replaced, while the calibrated parts of the instrument are undis-

turbed. The leads of winding 4 are of course readily removed from their terminal posts as hereinafter explained.

In the illustrated structure, both core sections are mounted for ready removal but it is only necessary to remove one. Core section 5 is supported by upper and lower removable bolts 58, 59 while core section 6 is supported by similar bolts 60, 61 (Fig. 2). These bolts 58, 59 extend through openings in front plate 2 and have wrench-engaging heads at their front ends and screw threaded rear ends as shown in Fig. 1. Said threaded ends engage threaded sockets or nut members 62, 63 anchored in main plate 1. The intermediate portions of these bolts are surrounded by sleeves 64 of insulation which extend with the bolts through openings in the core section 5. Metal spacing sleeves 65 surround sleeves 64 on opposite sides of said core section to space apart plate 1, core section 5 and plate 2, insulating washers 66 being positioned on opposite sides of core section 5. An insulating washer 67 is also on the bolts between the nut members 62 and 63 and the adjacent ends of sleeves 64 and 65 as shown in Fig. 1. The same construction is associated with bolts 60, 61 which support core section 6 and space it from plates 2 and 3. Thus, it will be seen that when the coil terminals hereinafter described are disconnected and the mounting bolts on one side, for example, bolts 58, 59, are removed, core section 5 may be removed and magnetizing coil 4 replaced by a new one and the removed parts then replaced. During such replacement, the bolts 60, 61 on the other side will hold the other parts and there will be no change in the calibrated parts of the instrument.

The four mounting bolts 58, 59 and 60, 61 being insulated as above described, may serve as binding posts for some of the conductor wires of the instrument. The terminals of coil 4 as shown in Fig. 2 are connected to clips 68 clamped beneath the heads of the two lower bolts 59, 61, the ends of the clips extending through openings in front plate 2 as shown in Fig. 1. Similar clips 69 are clamped beneath the heads of the two upper bolts 58, 60, and from the one on bolt 58 extends a flexible wire coil 70 which is soldered at its other end to the bottom of arm 20, as shown in Fig. 2, while a similar flexible wire 71 has one end connected to the clip on bolt 60 and its other end connected to clip 26. The two upper sockets or nut members 62 may be integral with spacers 72 which hold the rear plate 3 from the main plate 1 as shown in Fig. 1. These spacers have reduced and threaded rear ends which pass through plate 3 and receive clamping nuts with terminal clips beneath them. The front ends of spacers 72 have threaded sockets to receive the bolts 58, 60 and while they may be permanently attached to plate 1 in any desired manner, they preferably have reduced portions which are pressed tightly into drilled holes in plate 1 and then riveted as shown in Fig. 1 so they cannot turn. While plate 3 may be of any shape, it is shown as circular and if desired one or two additional spacers 73 may be employed. The two lower socket or nut members 63 which are secured to plate 1 in the same manner as spacers 72 and 73, are preferably in the form of internally threaded sleeves 74 and serve as conductor binding posts, terminal clips and binding screws being mounted on their rear ends as shown in Fig. 1.

Two additional conductor binding posts 75, 76 are mounted on main plate 1. These are in the form of bolts passed through openings in said

plate and having terminal clips beneath their heads and nuts as shown in Fig. 1. These binding posts are for the terminals of a supplemental or secondary winding or coil 77 which is wound on the magnetic frame or core sections 5, 6 and may be wound over coil 4, said winding or coil 77 being shown only in the circuit diagram, Fig. 6. This secondary winding 77 which might be termed the anti-hunting element winding of the voltage regulator, provides means for the slow vibration of the instrument by applying additional magnetomotive force in the magnetic circuit of the core.

Referring now to Fig. 6, 78 represents the alternator to be regulated which has two output leads connected by conductors 79, 80 to the terminals of magnetizing coil 4 by means of bolts 59, 61 and the associated parts as previously described. It will be understood that conductors 79, 80 may extend from the output terminals of a single phase generator or from one side of a three-wire system or from one of the phases of a multiphase generator, as the case may be. The field winding 81 of the alternator is connected to the terminals or brushes 82, 83 of the exciter direct current generator 84 which serves to excite the field of the alternator. From one exciter terminal as negative terminal 83 extends a conductor 85 which is in electrical connection with contact 21 through bolt 60 and associated parts, flexible wire 71, clip 26, screw 23 and arm 19. From the positive exciter terminal 82 extends a conductor 86 which is connected to one end of the actuating winding or coil 87 that surrounds the core 88 of a field relay 89 having a vibratory armature 90. The other end of coil 87 is in electrical connection with contact 22 through conductor 81, bolt 58 and associated parts, flexible wire 70 and arm 20. The armature 90 of the relay is preferably pivoted at one end at 92 on a suitable support, and at its free end on opposite sides are contacts 93 and 94 which coact respectively with relatively fixed contacts 95 and 96. These contacts 95 and 96 may be on adjustable screws suitably supported as in common practice in relays of this character. When core 88 is magnetized, armature 90 is drawn down to move contact 94 into engagement with contact 96 and when it is demagnetized, a spring 97 pulls it upwardly to move contact 93 into engagement with contact 95. Spring 97 may be a coil fastened at one end to the relay armature and at its other end to an adjusting screw 98 in a suitable support 99. In Fig. 6, armature 90 is shown in a position between its two circuit closing positions.

Included in the circuit of the exciter field 100 of the direct current generator 84, is a rheostat 101 with an adjustable contact 102 and terminals 103 and 104. The terminal 103 to which the adjustable contact is connected, is connected by a conductor 105 to one end of exciter field 100, the other end of which is connected by a conductor 106 to the terminal 83 of the exciter. The other terminal 104 of the rheostat is connected by a conductor 107 to terminal 82 of the exciter. Terminal 103 of the field rheostat is connected by a conductor 108 to contact 96 and the other terminal 104 is connected by a conductor 109 to relay armature 90 so that when armature contact 94 engages relay contact 96, the rheostat 101 is short circuited.

An external resistance 110 with a sliding or other adjustable contact 111 has one terminal 112 connected by a conductor 113 to binding post 76 to which one end of supplementary winding 77

is connected, while the other terminal 114 is connected by a conductor 115 to the other binding post 76 of winding 77. Sliding contact 111 of the variable resistance 110 is connected by a conductor 116 to the relay contact 95. To terminal 114 of the resistance 110 is connected a conductor 117 which leads to relay armature 90, the latter being in electrical connection with its contacts 93, 94 as above indicated. It will thus be seen that when contacts 93 and 95 are engaged, the portion of resistance 110 between sliding contact 111 and terminal 114 will be short circuited.

If desired, a flickering-light signal lamp 118 may have one terminal connected by a conductor 119 to conductor 115 and its other terminal connected by a conductor to another sliding contact 120 on resistance 110, as shown in Fig. 6. When this signal lamp is used, a suitable lamp socket, not illustrated, may be provided for it on front plate 2. The lamp will flicker as often as contacts 93—95 close and open, and hence will show an attendant within sight of the instrument that the voltage regulator is in operation and that the voltage conditions are correct.

It is to be noted that exciter 84 generates the power for the operation of relay 89, the contacts of which cause the alternate short circuiting of rheostat 101 and a portion of resistance 110. To cause an oscillation of anywhere between 200 and 500 per minute, the current that can flow through external rheostat 110 is altered when armature 90 closes contacts 93 and 95 at times when core 88 is not energized by coil 87. When core 88 is so energized, contacts 93 and 95 are open but contacts 94—96 are closed to completely short circuit field rheostat 101. This closing of contacts 94—96 increases the field current of the exciter and causes the exciter output voltage to increase whereby the said output voltage of alternator 78 is affected in like manner.

When the alternator 78 is operating at the desired output voltage, armature 9 of the vibratory contact make-and-break device 13 is attracted by pole pieces 7, 8 so far as to instantaneously separate contacts 21, 22 whereupon relay core 88 is completely deenergized. When thus deenergized, relay contacts 93, 95 are closed and contacts 94, 96 are open as above stated; and during this period of time, the voltage of exciter 84 will drop slightly and a portion of external resistance 110 will be shunted out by the closing of contacts 93, 95. While contacts 94, 96 are open, and rheostat 101 cuts down the field current, the exciter is losing voltage to some extent and the alternator likewise loses a portion of its output voltage. During the period that contacts 94, 96 have shunted out a portion of external resistance 110, less current flows through coil 77 and its magnetomotive force of main winding 4 is reduced by the reduction of output voltage of the alternator due to the exciter voltage dropping and this, with the decrease in supplemental winding 77, will cause a deficiency in the magnetization of pole pieces 7, 8 to such an extent that armature 9 is permitted to slightly pull away from the pole pieces 7, 8 under the influence of spring 15, so that contacts 21, 22 again come into engagement, whereupon the circuit that energizes coil 87 is closed and again core 88 attracts armature 90 to cause contacts 94, 96 to close and again shunt rheostat 101 out of the exciter field circuit. Then the exciter voltage steps up and in proportion raises the voltage of the alternating current generator.

While the voltage of the alternator 78 is raised during the time contacts 94, 96 were closed, contacts 93, 95 are then opened and less current passes through secondary winding 77. While coil 77 is thus traversed by less current, main coil 4 regains its full efficiency in energizing pole pieces 7, 8 due to increased applied voltage, and the regained efficiency of coil 4 plus the slightly raised voltage of the alternator will again cause pole pieces 7, 8 to pull armature 9 into the magnetic field so far as to cause contacts 21, 22 to again separate. Thus, the action of the regulator continues indefinitely as long as the alternator and the exciter are rotating at the predetermined speed at which they carry the load. That is, the regulator will keep on vibrating to maintain the desired voltage until the alternator is overloaded to such an extent that it can no longer maintain its desired A. C. voltage at such an increased load, and at a certain lower A. C. voltage than that for which the regulator is calibrated, the armature 9 will not be attracted by pole pieces 7, 8 so far as to separate contacts 21, 22; and as long as these contacts are not separated by the magnetic pull on armature 9, coil 87 will remain energized to hold its core 88 continually magnetized so that armature 90 will be held down to keep contacts 94, 96 engaged. While these contacts are closed, the exciter field rheostat 101 is continuously shunted out of the circuit, and hence, during this length of time can supply all the excitation necessary for the alternator to carry the necessary load during the period of overload which it is able to carry.

It is to be understood that the relay may be used in connection with either an alternating or a direct current.

While one form of the regulator has been disclosed in detail, it is obvious that the present specification is to be understood in an illustrative sense and not as a limitation, since it should be evident to those skilled in the art that various changes and modifications might be made without departing from the spirit and scope of the invention as defined in the following claims.

I claim:

1. In a voltage regulator, the combination of a supporting frame, a vibratory unit supported by said frame and including a shaft mounted for oscillation on said frame, a base member fixed between its ends to said shaft, a contact-carrying arm having one end secured to and insulated from said member on one side of said shaft, a second contact-carrying arm disposed substantially parallel with the first one and having one end pivoted to said member on the other side of said shaft, coacting contacts carried by the free ends of said arms, a bumping roller journaled on the intermediate portion of said pivoted arm, an armature fixed between its ends to said shaft and so constructed as to be oscillated when an alternating magnetic flux is applied directly thereto and a ballast element fixed to said shaft and being of relative large weight, a fixed stop of insulation supported by said frame and disposed between said arms for coaction with one side of said roller, a yieldable spring stop supported by said frame and disposed for coaction with the other side of said roller, a spring connected between said frame and said pivoted arm for moving the latter to urge its contact toward the coacting contact, and spring means connected between said frame and said oscillatory unit for biasing said armature to cause it to assume a definite position for a given magnetic force acting thereon.

2. A voltage regulator as defined in claim 1 in further combination with means for adjusting the spring acting on said pivoted arm and means for adjusting the spring means for biasing said armature.

3. In a voltage regulator, a magnetic frame having a principal armature gap, a magnetizing winding on said frame, a mounting base, a shaft rotatably mounted on said base in said armature gap, an armature fixedly carried on said shaft and adapted to substantially fill said armature gap, spring means normally urging said armature out of the position of minimum reluctance, a block fixedly carried by said shaft, a first arm fixedly carried on said shaft and provided with a terminal contact stud, a second arm pivotally carried on said block and provided with a terminal contact stud, auxiliary resilient means urging said second arm toward said first arm for engagement of said contacts, and a fixed stop carried by said base and positioned between said arms for engaging said second arm when said armature is rotated.

4. A voltage regulator as recited in claim 3, said pivot of said second arm being substantially offset from said shaft.

5. A voltage regulator as recited in claim 3, said pivot of said second arm being substantially offset from said shaft, and a roller rotatably mounted on said second arm and adapted to roll upon said stop as said armature is rotated.

6. A voltage regulator as recited in claim 3, and a substantial ballast weight carried on said shaft for damping its rotation.

7. A voltage regulator as recited in claim 3, and a resilient stop on the outside of said second arm opposite said fixed stop.

8. A voltage regulator as recited in claim 3, a resilient stop on the outside of said second arm opposite said fixed stop, and a resilient stop on the outside of said first arm opposite said fixed stop.

9. In a voltage regulator, a vibratory make-and-break contact unit comprising a shaft to be mounted for oscillatory movement, an elongated block extending transversely of said shaft and fixed thereto, a contact-carrying arm fixed to said block on one side of said shaft, a second arm pivotally connected to said block on the other side of said shaft and carrying a contact to coact with the contact on said first-mentioned arm, a bumper carried by said pivotally mounted arm, a ballast weight fixed to said shaft and an armature fixed between its ends to said shaft and so constructed as to be oscillated when an alternating magnetic flux is applied directly thereto to cause said unit to oscillate.

10. In a voltage regulator, a vibratory make-and-break contact mechanism comprising an elongated block mounted for oscillation on a transverse axis located between its ends, a contact-carrying arm having one end fixed to said block on one side of the pivotal axis of said block, a second contact-carrying arm disposed substantially parallel with said first mentioned arm and having one end pivoted to said block on the other side of said axis, coacting contacts on the free ends of said arms, and a bumper carried by said pivotally mounted arm.

11. In a voltage regulator, a vibratory make-and-break contact mechanism including a contact-carrying arm mounted for swinging and sliding movement and a bumping roller on said arm and provided with a periphery having spaced V-shaped ribs.

12. In a voltage regulator, the combination of a supporting frame including a main plate, a front plate and a rear plate in spaced parallel relation, said front and rear plates having forwardly and rearwardly alined shaft bearings and said main plate having an opening, a shaft extending through said opening and mounted for oscillation in said bearings, an armature fixed to said shaft between said main and front plates and so constructed as to be oscillated by an alternating magnetic flux applied directly thereto, a make-and-break contact mechanism carried by said shaft in rear of said front plate, said shaft, armature and contact mechanism constituting a vibratory unit, a rotatably adjustable device frictionally mounted at said opening in the main plate and having an opening through which said shaft passes, and a helical spring surrounding said shaft between said device and said armature and having one end anchored to said friction device and its other end anchored to said vibratory unit.

13. A voltage regulator as defined in claim 12 in which said rotatably adjustable device comprises a sleeve through which said shaft passes and a pair of disks secured to said sleeve and positioned over said opening in the main plate with their outer portions in frictional engagement with the opposite sides of said main plate.

14. In a voltage regulator, a magnetic frame having a principal armature gap, a magnetizing winding on said frame, a mounting base, a shaft rotatably mounted on said base in said armature gap, an armature fixedly carried on said shaft and adapted to substantially fill said armature gap, spring means normally urging said armature out of the position of minimum reluctance, a block fixedly carried by said shaft, a first arm fixedly carried on said shaft and provided with a terminal contact stud, a second arm pivotally carried on said block and provided with a terminal contact stud, auxiliary resilient means urging said second arm toward said first arm for engagement of said contacts, a bumping roller mounted on said second arm, and a fixed stop carried by said base and positioned between said arms for engagement by said roller when the armature is turned in one direction, said first stop having a flat face for contact with said roller, said roller having a periphery of spaced V-shaped ribs to roll on said flat face.

15. In a voltage regulator of the type in which a vibratorily oscillatable shaft is mounted on a supporting frame and is electro-magnetically turned in one direction against a biasing force tending to turn it in the other direction; a fixed stop on said frame spaced laterally from said shaft, one contact arm secured to said shaft and located at and in spaced relation with one side of said fixed stop, a second contact arm located at and in spaced relation with the other side of said fixed stop for coaction with said one arm, said other side of said fixed stop having a surface disposed substantially in a plane radial to said shaft, a bumping roller disposed between the ends of said second arm and mounted on this arm on an axis parallel with the shaft axis, said roller being located to strike said surface of said fixed stop as said shaft turns in said one direction, means pivotally mounting said second arm on said shaft on an axis parallel with the shaft axis and laterally offset from the latter to cause slight endwise movement of said second arm after said roller strikes said surface of said fixed stop, thereby causing rolling of said roller on

this surface, spring means acting on said second arm and yieldably holding it in conducting contact with said one arm to cause said second arm to follow said one arm upon shaft turning in said one direction until said roller strikes said surface of said fixed stop, whereupon said one arm may leave said second arm to cause contact opening, and a stop on said frame for limiting the distance which said one arm may push said second arm upon turning of said shaft in said other direction, said stops being so positioned that said shaft may have limited oscillation without causing contact opening.

16. In a voltage regulator of the type in which a vibratorily oscillatable shaft is mounted on a supporting frame and is electro-magnetically turned in one direction against a biasing force tending to turn it in the other direction; a fixed stop on said frame spaced laterally from said shaft, one contact arm secured to said shaft and located at and in spaced relation with one side of said fixed stop, a second contact arm located at and in spaced relation with the other side of said fixed stop for coaction with said one arm, said other side of said fixed stop having a surface disposed substantially in plane radial to said shaft, a bumping roller disposed between the ends of said second arm and mounted on this arm on an axis parallel with the shaft axis, said roller being located to strike said surface of said fixed stop as said shaft turns in said one direction, means pivotally mounting said second arm on said shaft on an axis parallel with the shaft axis and laterally offset from the latter to cause slight endwise movement of said second arm after said roller strikes said surface of said fixed stop, thereby causing rolling of said roller on this surface, spring means acting on said second arm and yieldably holding it in conducting contact with said one arm to cause said second arm to follow said one arm upon shaft turning in said one direction until said roller strikes said surface of said fixed stop, whereupon said one arm may leave said second arm to cause contact opening, and a yieldable stop on said frame in position to contact with the side of said roller remote from said fixed stop, the normal distance between said yieldable stop and said surface of said fixed stop being slightly greater than the diameter of said roller, to allow limited shaft oscillation without causing contact opening.

17. A structure as specified in claim 15; one of the coacting surfaces of said roller and fixed stop being of sharp-ridged form, thereby preventing said coacting surfaces from sticking together if they become coated with an oily film.

18. In a voltage regulator having a swingable contact arm; a roller mounted on said arm, the axis of said roller being disposed at a right angle to the direction of swinging movement of said arm, and a fixed stop having a surface in the path of said roller to be struck by the periphery of the latter to limit the swinging movement of said arm in one direction, one of the coacting surfaces of said roller and stop being of sharp-ridged form to prevent said surfaces from sticking together if they become coated with an oily film.

19. In a voltage regulator of the type in which a vibratorily oscillatable shaft is mounted on a supporting frame and is electro-magnetically turned in one direction against a biasing force tending to turn it in the other direction; a fixed stop on said frame spaced laterally from said shaft, one contact arm secured to said shaft at and in spaced relation with one side of said fixed stop, a second contact arm located at and in spaced relation with the other side of said fixed stop, said contact arms having coacting terminal contacts, means pivotally mounting said second contact arm on said shaft for swinging movement toward and from said one arm, and spring means urging said second arm toward said one arm, whereby upon turning of said shaft in said one direction said second arm will follow and remain in contact with said one arm until said second arm strikes said fixed stop, and this stop may be struck by said one arm to determine the maximum distance which said shaft may turn in said other direction.

20. In a voltage regulator, a supporting frame including an intermediate plate, a second plate spaced forwardly from and parallel with said intermediate plate, and a third plate spaced rearwardly from and parallel with said intermediate plate; alined bearings supported by said second and third plates; a vibratory unit including a shaft having an armature, and a pair of relatively movable contact arms both supported by said shaft; said shaft being mounted in said bearings and being therefore supported by said second and third plates, said armature and said contact arms being disposed between said intermediate plate and said second plate; means connected between one of said contact arms and said frame for adjusting the operation of the contacts; means connected between said vibratory unit and said intermediate plate for adjusting the operation of said unit; a core between said intermediate and front plates and cooperable with said armature, said core comprising two sections having alined coil-supporting arms; a magnetizing coil removably surrounding said coil-supporting arms; and core section-supporting means supported by said intermediate and second plates and independently supporting said core sections, said core section-supporting means including removable fasteners removably supporting at least one of said core sections to permit coil removal when this core section is removed.

21. In a voltage regulator of the type in which a vibratorily oscillatable shaft is mounted on a supporting frame and is electro-magnetically turned in one direction against a biasing force tending to turn it in the other direction; a fixed plate embodied in said frame, said plate being disposed between the ends of said shaft in a plane at a right angle to said shaft and having an opening through which said shaft passes, the wall of said opening being spaced from said shaft, a coiled torsion spring surrounding said shaft and having one of its ends connected to said shaft to supply said biasing force, and a combined anchor and adjusting device to which the other end of said spring is connected, said device surrounding said shaft and having friction means contacting with said plate and permanently set for predetermined friction against said plate to hold said device in any position to which it may be turned, said device also having means for engagement with a tool to facilitate turning of said device to accurately tension said spring.

22. In a voltage regulator of the type in which a vibratorily oscillatable shaft is mounted on a supporting frame and is electro-magnetically turned in one direction against a biasing force tending to turn it in the other direction; a fixed plate embodied in said frame, said plate being disposed between the ends of said shaft in a

plane at a right angle to said shaft and having an opening through which said shaft passes, said opening having a diameter greater than the shaft diameter and having a side wall concentric with said shaft, a coiled torsion spring surrounding said shaft and having one of its ends connected to said shaft to supply said biasing force, and a combined anchor and adjusting device to which the other end of said spring is connected, said device being rotatively mounted in said opening of said plate and having an opening through which said shaft extends, said device having friction means contacting with opposite sides of said plate and permanently set for predetermined friction against said plate to hold said device in any position to which it may be turned, said friction device also having means for engagement with a tool to facilitate turning of said device to accurately tension said spring.

23. In a voltage regulator of the type in which a vibratorily oscillatable shaft is mounted on a supporting frame and is electro-magnetically turned in one direction against a biasing force tending to turn it in the other direction; a fixed plate embodied in said frame, said plate being disposed between the ends of said shaft in a plane at a right angle to said shaft and having an opening through which said shaft passes, said

opening having a diameter greater than the shaft diameter and having a side wall concentric with said shaft, a coiled torsion spring surrounding said shaft and having one of its ends connected to said shaft to supply said biasing force, and a combined anchor and adjusting device to which the other end of said spring is connected, said device comprising two friction disks spanning said opening and contacting frictionally with opposite sides of said plate, and a tubular hub connecting said disks in permanently set relation with each other and surrounding said shaft, at least one of said disks having a centering portion received in said opening.

MICHAEL DEBREY.

REFERENCES CITED

The following references are of record in the file of this patent:

UNITED STATES PATENTS

Number	Name	Date
1,011,070	McQuown	Dec. 5, 1911
1,442,309	Thompson	Jan. 16, 1923
1,758,456	Merricocci	May 13, 1930
2,295,238	Schenk	Sept. 8, 1942
2,324,370	Debrey	July 13, 1943
2,369,376	Spaulding	Feb. 13, 1945