United States Patent

Vik

[15] 3,654,875

[45] Apr. 11, 1972

[54] **PALLET FOR HANDLING SHIPPING DRUMS**

[72] Inventor: **Albam M. Vik,** New Brighton, Minn.

[73] Assignee: **Inventors Engineering Inc.,** Fridley, Minn.

[22] Filed: **Oct. 28, 1969**

[21] Appl. No.: **871,983**

Related U.S. Application Data

[63] Continuation of Ser. No. 698,898, Jan. 18, 1968, abandoned, which is a continuation-in-part of Ser. No. 673,609, Oct. 9, 1967, Pat. No. 3,521,771.

[52] **U.S. Cl.** .....**108/51,** 108/53, 108/55, 214/10.5 R, 220/97 B, 214/621

[51] **Int. Cl.** **B65d 19/44**

[58] **Field of Search** .....214/10.5, 620, 621, 300; 206/60 A, 300; 108/51, 52, 53, 55, 58; 220/97, 97 B, 97 C, 97 D, 97 E, 97 F

[56] **References Cited**

UNITED STATES PATENTS

2,385,407	9/1945	Endress	220/97 X
2,594,287	4/1952	Budd	206/60 A X
3,162,331	12/1964	Hutchins et al.	214/621 X
3,180,537	4/1965	Collins	220/97 B
3,211,311	10/1965	Krabbenschmidt	214/300
3,294,306	12/1966	Areddy	220/97 X
3,318,473	5/1967	Jones et al.	214/621
3,348,738	10/1967	Hertlein	214/621 UX
3,354,515	11/1967	Robinson	220/97 B

FOREIGN PATENTS OR APPLICATIONS

678,108	1/1964	Canada	206/60 A
846,541	8/1960	Great Britain	220/97

Primary Examiner—Gerald M. Forlenza
Assistant Examiner—Robert J. Spar
Attorney—James V. Harmon

[57] **ABSTRACT**

A pallet is described which is to be used for handling and transporting shipping drums, such as fiber drums, steel drums or barrels by fastening the pallet to the base of the drum. The pallet is of just sufficient size to accommodate a single drum. The drum is filled and transported while maintaining it secured to the pallet at all times. The pallet includes a circular extension, comprising a ring of strip material adapted to fit telescopically over the lower end of the drum and a plurality of horizontally disposed legs fastened rigidly to the ring.

4 Claims, 11 Drawing Figures

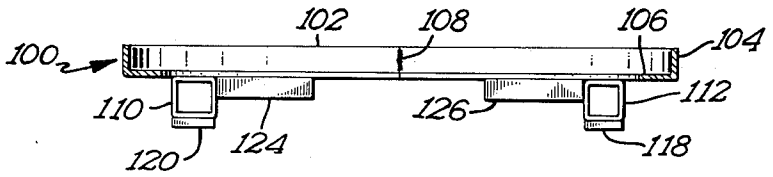

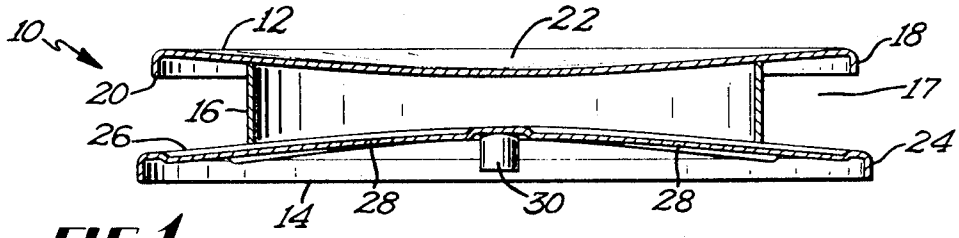

FIG 1

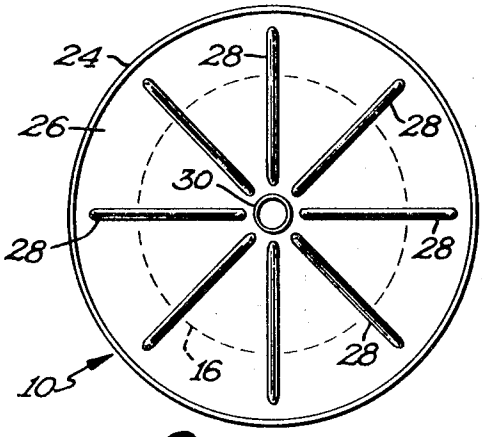

FIG 2

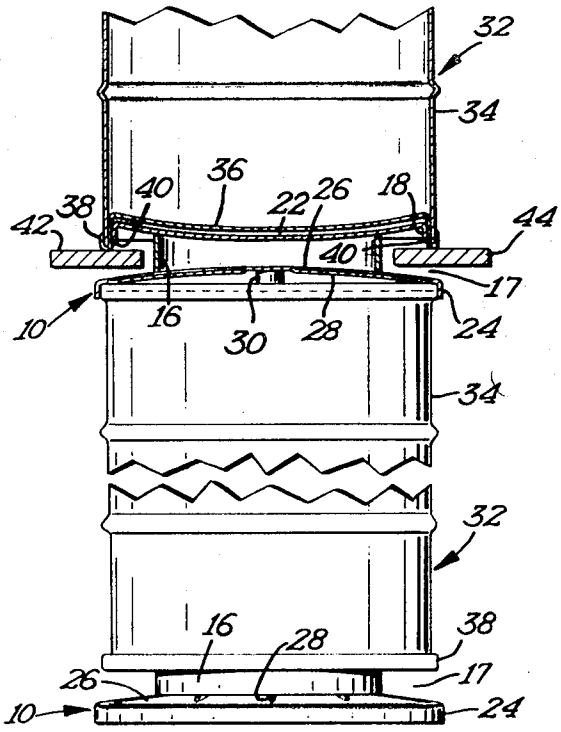

FIG 3

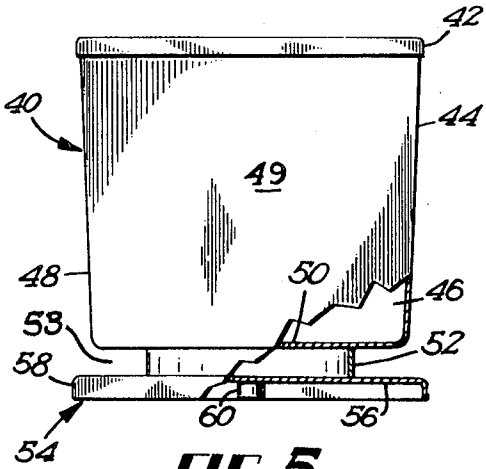

FIG 5

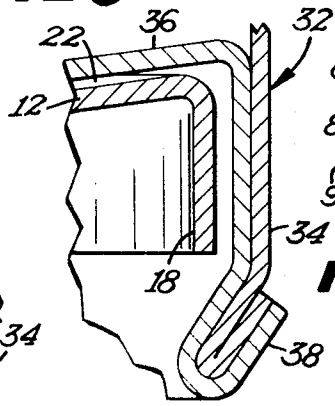

FIG 4

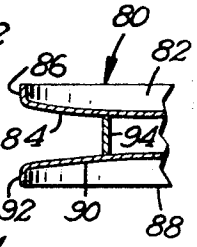

FIG 7

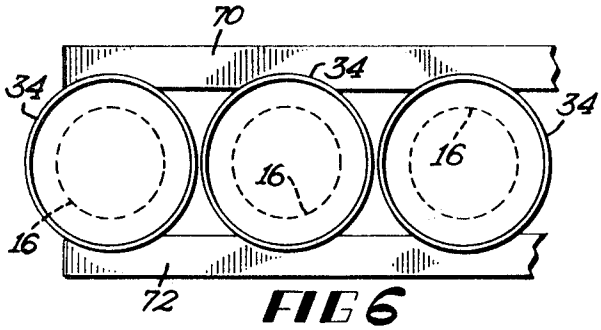

FIG 6

INVENTOR.
ALBAM M. VIK
BY James V. Harmon
ATTORNEY

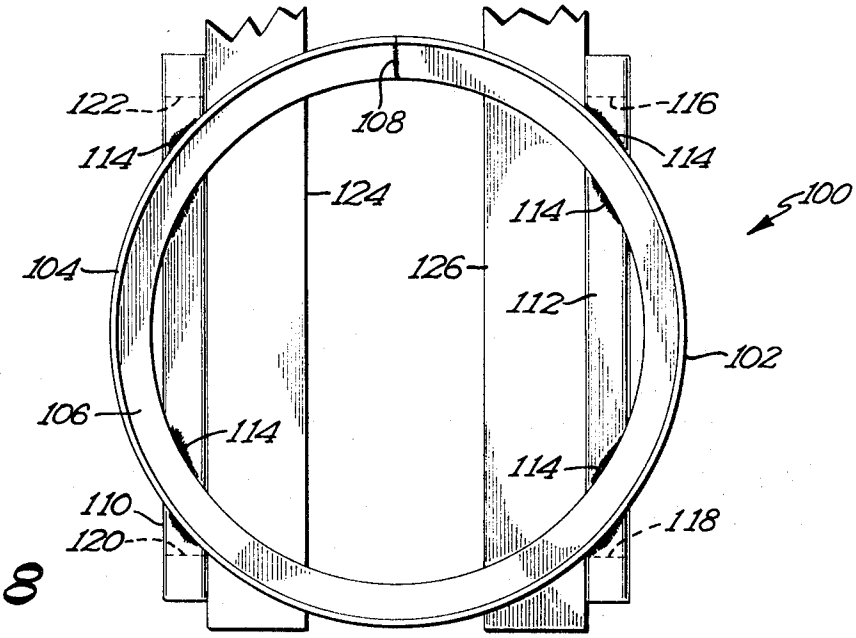

FIG 8

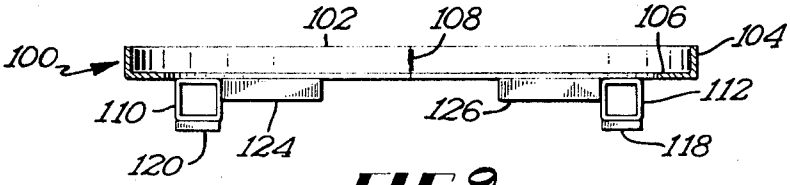

FIG 9

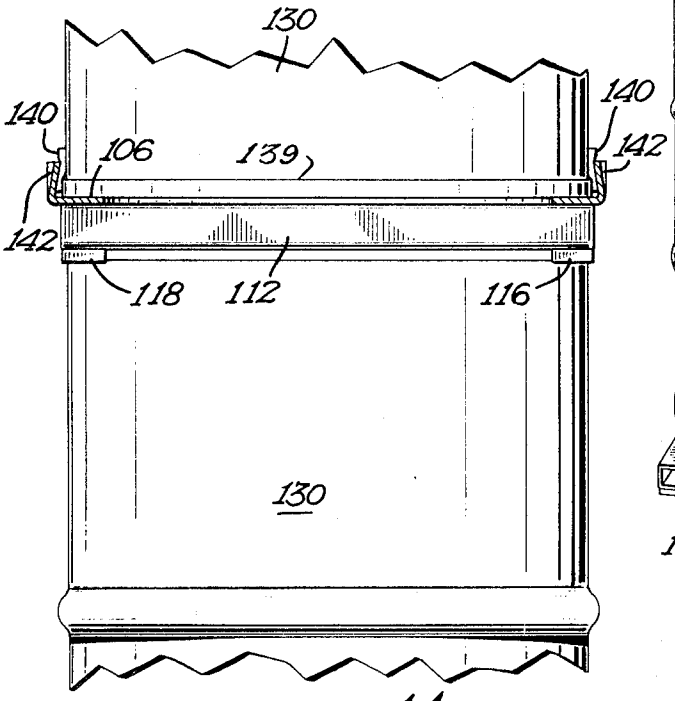

FIG 11

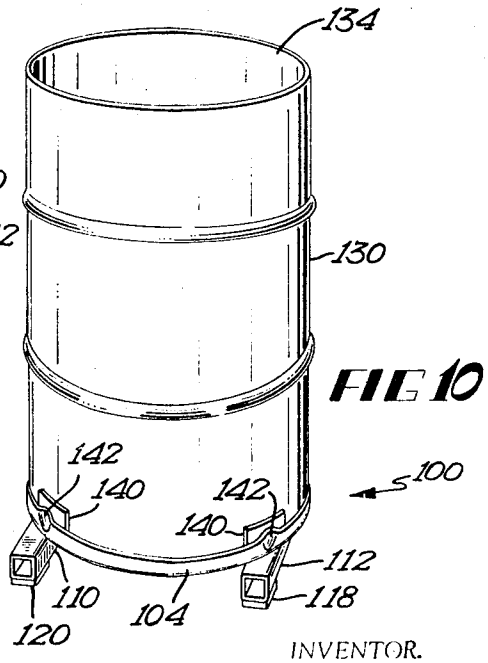

FIG 10

INVENTOR.
ALBAN M. VIK
BY James V. Harmon
ATTORNEY

PALLET FOR HANDLING SHIPPING DRUMS

This application is a continuation of application, Ser. No. 698,898, filed Jan. 18, 1968, now abandoned bearing the same title, which, in turn, is a continuation-in-part of my prior application, Ser. No. 673,609, filed Oct. 9, 1967, now U.S. Pat. No. 3,521,771.

This invention relates to a pallet for handling shipping drums.

Shipping drums such as fiber drums, steel oil drums and barrels are characteristically difficult to handle, not only because of their cylindrical shape but also because there are no extensions or handles by which they can be lifted. Even if handles were provided, their weight would make manual handling impractical. Accordingly, it is the present practice to handle shipping drums of this kind in one of two ways. The most common method is to place four such drums on a wooden pallet of the type having a rectangular horizontally disposed spaced-apart upper and lower surface connected together by wooden spacers. After the drums are filled, from two to four of the drums are lifted or slid onto the pallet by hand. A lift truck is then employed for lifting the pallet upon which the drums rest to a truck or railroad car where they are transported to the desired location. The drums are then removed from the pallet and unloaded by hand. If they contain solid materials such as metal castings, they must be inverted. This is a particularly difficult and time-consuming operation when the drums are heavily loaded. After the drums have been removed, the pallets are separately handled and stored. The drums are then returned or reused either by themselves or in conjunction with the pallets upon which they were initially shipped.

This method of handling shipping drums has a number of disadvantages, the primary one being the requirement for manual handling when the drums are loaded onto or removed from the pallets and the requirement for handling and shipping of the pallets separately. Moreover, because it is possible for the drums to slide about on the pallets this method of handling produces a safety hazard and it is not usually practical to stack the drums in tiers one above the other.

In another method used for handling shipping drums of the type under consideration, a pair of clamp arms mounted upon a lift truck are provided with jaws of the proper shape to fit the drum. After the clamp engages the drum, the lift truck is used to transport the drum to the vehicle used for carrying it to the desired destination. While this method of handling drums is entirely satisfactory in many cases, it is sometimes prohibitively expensive or inconvenient to use clamps because the trucks are required for performing other operations. Furthermore, the drums cannot be reliably stacked one above the other. For these and other reasons, prior methods employed for handling and shipping drums of the type described have not been entirely satisfactory.

It is thus a primary object of the present invention to provide an improved method for handling and transporting shipping drums such as fiberboard and steel drums.

Another more specific object of the invention is the provision of an improved method for transporting shipping drums which will enable the drums to be quickly and easily handled by means of fork lift trucks and stacked one above the other in vertical alignment.

A further object of the invention is the provision of an improved method of handling and transporting shipping drums without the necessity for manually lifting the drums and placing them on pallets either before they are filled or when they are emptied.

A still further object of the invention is the provision of an improved method for handling shipping drums of the type described in which drums can be easily loaded and unloaded from the forks of a standard fork lift truck and can be placed in closely spaced adjacent relationship without the pallet of one drum coming into contact with another.

A further object of the present invention is the provision of an improved drum pallet which is inexpensive to construct, adapted to reliably support a single drum and capable of being constructed with a minimum of parts.

These and other more detailed and specific objects will become apparent in view of the following specification and drawings wherein:

FIG. **1** is a central vertical sectional view of a shipping drum pallet in accordance with the invention.

FIG. **2** is a bottom view of the pallet of FIG. **1** on a somewhat reduced scale.

FIG. **3** is a partial side elevational view partly in section of two shipping containers to which a pallet in accordance with the invention is secured.

FIG. **4** is a greatly enlarged partial vertical sectional view of the lower edge of one of the shipping drums showing the upper portion of the pallet in its engaged position adjacent the bottom of the drum.

FIG. **5** is a side elevational view partly broken away of another embodiment of the invention.

FIG. **6** is a plan view of a plurality of shipping drums being transported in accordance with the invention.

FIG. **7** is a partial central vertical sectional view of a pallet in accordance with another embodiment of the invention.

FIG. **8** is a plan view of another form of pallet.

FIG. **9** is a front elevational view of the pallet of FIG. **8**.

FIG. **10** is a perspective view of the pallet during use.

FIG. **11** is a partial elevational view of the stacked drums utilizing the invention.

To the accomplishment of the foregoing and related ends this invention comprises the features hereinafter fully described and particularly pointed out in the claims, the following description setting forth in detail certain illustrative embodiments of the invention, these being indicative, however, of but a few of the various ways in which the principles of the invention may be employed.

A preferred method of practicing the invention will now be described. As a first step in practicing the invention, the shipping drums whether they be fiber drums, steel drums or barrels are mounted upon a supporting pallet of just sufficient size to accommodate a single drum. The construction of the pallet itself will be described more fully below. At this point it is sufficient to say that the pallet is provided with a drum engaging support on its upper surface and the base of the drum is placed on the drum engaging support, preferably with the base of the drum telescopically connected to the pallet to prevent lateral sliding movement of the pallet relative to the drum. The telescopic connection can be formed either by a flange at the bottom of the drum extending downwardly over the top of the pallet or, in the alternative, a circumferentially distributed vertically projecting extension on the upper edge of the pallet that projects upwardly over the side edges of the drum.

The pallet is then fastened to the drum by securing the upper edge of the pallet to the lower edge or base of the drum. This can be accomplished in a number of ways as for example by welding or by deforming the portions of the pallet adjacent the drum so as to provide overlapping tabs that extend inwardly over the chime or bead at the bottom of the drum and thereby securely grip the base of the drum. In the alternative, mechanical fasteners such as screws, bolts or clamps can be provided for this purpose. The connection between the drum and the pallet need not be a rigid one so long as it prevents the drum from being removed.

The drums with the pallets secured to them are filled in the usual way either manually or with automatic equipment. At this point they are ready for shipment. The drums are then lifted by means of the lift truck forks and are carried by a fork lift truck to a vehicle where they are transported to their destination. During this time the pallets remain fastened to the drum. Once the drums reach their destination, they are removed from the vehicle and emptied with the pallets remaining secured to the drums at all times. The drums are then cleaned if necessary in the usual way with the pallets secured to them. They are refilled with the pallet still secured to them. The drums are thus used with the pallets normally remaining permanently attached to them throughout their lifetime.

The invention is based partly on the recognition that the utility of a shipping drum can be greatly increased by permanently securing to it a small pallet of just sufficient size to accommodate a single drum and maintaining the pallet at all times secured to the drum throughout filling, shipment, emptying, refilling. While it is possible to utilize pallets in accordance with the invention without fastening the pallets in place on the drums as described herein, the drums will remain in position on the pallets solely as the result of their own weight. This has the disadvantage of the drums becoming inadvertently separated from the pallets or falling off the pallet during shipment.

Refer now to FIGS. 1 – 7. FIGS. 1 – 4 illustrate one form of pallet embodying the present invention. The pallet which is designated **10** includes an upper drum engaging element **12** and a pedestal **14** joined together by a circular post **16** formed from a hollow ring of sheet metal welded at its upper and lower edges to the engaging element **12** and pedestal **14**. The edge portions of the supporting element, pedestal and the centerpost **16** define an annular recess **17** into which the forks of the lift truck extend when the pallet is to be lifted off the ground. The free edges of the supporting element and pedestal define fork engaging surfaces **20** and **26** respectively.

The periphery of the element **12** is bent downwardly to provide a circumferentially extending downwardly projecting circular flange **18** which serves both to locate and position the pallet within the recess at the bottom of the drum as well as to rigidify the upper supporting element **12**. In the event that the flange **18** is of sufficient length to extend below the lower end of the drum, its lower edge **20** will comprise an upper supporting surface. If, on the other hand, the flange **18** is shorter than the lower flange of the drum, the lower edge of the drum will serve as an upper supporting surface.

The supporting element **12** is formed from sheet metal having a dome shape with the apex of the dome projecting downwardly. The lower supporting plate **14** is similarly domed but in the opposite direction (with the apex of the dome projecting upwardly). This provision has two advantages. First, it rigidifies the sheet metal and secondly it allows the drum engaging element **12** to fit securely within the lower portion of the drum.

The lower pedestal **14** is also preferably reinforced by means of circumferentially spaced radially extending reinforcing ribs **28** in this case formed by stamping in them the pedestal **14**.

As seen in the figures, the periphery of the pedestal **14** is turned downwardly to provide a circumferentially extending downwardly projecting cylindrical flange **24** similar to the flange **18** of the element **12**. The flange **24** provides several important functions. First, it reinforces the pedestal **14** thereby making the plate more resistant to damage. Second, it provides a flat supporting surface for the pallet when the pallet is placed on the ground. Third, it provides a cylindrical recess adapted to fit over the top of a drum as will be described more fully in connection with FIG. 3. The flanges **18** and **24** can be continuous or interrupted, i.e., a series of tabs, but the latter construction will not provide as much reinforcement.

The center of the plate **14** has suitably secured to it, e.g., by welding, a supporting element such as a tube **30**. The bottom of the tube **30**, it will be noticed, is normally elevated slightly above the bottom edge of the flange **24**, but as the weight of the load resting on the pallet presses downwardly on the pallet, the center of the pallet will be deflected downwardly a short distance and the supporting member **30** will contact the ground. This provision assures that the center of the pallet will be adequately supported but prevents the pallet from being unstable when placed on the ground as it would be if the supporting element **30** projected below the flange **24**. While the pallets can be formed from many materials, I have found that ⅛ inch thick sheet metal steel metal steel is satisfactory.

Refer now particularly to FIG. 3 which shows the pallet **10** as it appears when being used. As shown in the figure, the element **12** is inserted into the recess at the bottom of a steel drum **32**. The recess is formed by downward extensions of the side wall **34** of the drum and a downward circular extension of the bottom wall **36** of the drum which is crimped to the side wall **34** being folded outwardly and back upon itself at **38** (FIG. 4). It should be noted that since the upper plate **12** is recessed within the drum **14**, it is only the lower edge of the drum at the seam **38** that is engaged by the upper edge of the fork. In this manner the pallet itself is protected from damage.

The pallet **10** can be secured to the drum **32** in a variety of ways, for example by welding as shown at **40** in FIG. 3 or in the alternative by bending a portion of the lower edge of the flange at the base of the drum **32** inwardly as shown in FIG. 4. This can conveniently be done by first inserting the upper end of the pallet and then hammering the lower edge of the drum seam centrally at three or four places about its circumference. The latter form of connection has the advantage of being semi-permanent and it is a simple matter to remove the pallet by placing a wrench or other tool over the bent-in sections of the drum chime and bending them outwardly to their original position. Welding **40** is preferred where a more permanent connection is desired. The pallets **10** can, in this manner, be removably secured to the drums without the requirement for fasteners which, if present, would add to the cost of the equipment.

As can be seen in FIG. 3, the forks **42** and **44** of a lift truck (not shown) are inserted in the annular recess **17**. Their upper surfaces will contact the upper fork engaging surface defined in this instance by the lower edge of the drum **32**. The lower surfaces of the forks will at times contact the lower fork engaging surfaces defined by the upper edge of the pedestal **14**. It can be seen that the recess **17** has sufficient height to accommodate the thickness of the forks **42** and **44** and that the centerpost **16** is of an appropriate diameter to fit between the forks **42** and **44**. It can also be seen that since the recess **17** is circular, the forks **42** and **44** can enter the recess from any direction, i.e., from any side of the drum and no special effort is received on the part of the fork lift truck operator to position the truck prior to moving the forks to the engaged position.

The flange **24** is of a slightly larger diameter than the flange **18**. In this way the flange **24** will just fit over the top of the drum **32** of a same size as the drum to which the pallet is fastened. A substantial number of the drums **32** can therefore be stacked one on top of the other without any danger of the pile falling over.

It will also be noted that downwardly turned edge **24** of the pedestal **14** will place the lower edge of the recess **17** at the proper height above the floor so that the tip of the forks as they slide across the floor will easily enter the recess **17** without being elevated above the floor. The pallets can thus be picked up without the requirement for vertical placement of the forks.

Refer now to FIG. 5 which shows a modified form of the invention. In this form of the invention is provided a portable storage and shipping drum **40** including an upper seamed edge **42**, vertically disposed flat side walls **44**, **46**, **48** and **49** and a flat bottom wall **50**. Welded to the bottom wall **50** is a post **52** formed from a sheet metal and positioned approximately in the center of the wall **50**. At the lower edge of the post **52** is welded a pedestal **54** which together with the post **52** and the bottom wall **50** defines a pallet having an annular recess **53** in all respects similar to the recess **17** of FIGS. 1 – 4 and having upper and lower fork engaging surfaces defined by the edges of the wall **50** and the edges **56** of the pedestal **54**. The periphery of the plate **54** is turned downwardly to provide a peripheral downwardly extending rectangular flange **58** which serves as a support when the pallet is placed on the ground as well as providing a recess which will fit telescopically over the top edge **42** of another one of the drums **40** when they are stacked. A central support element **60** which can consist of metal tubing is welded at its upward edge to the center of the plate **54**.

Refer now to FIG. 6 which illustrates the method of handling several of these drums and pallets simultaneously. As seen in the figure, the forks **70** and **72** have a somewhat greater length than those which are normally used. These forks are placed at the appropriate distance from one another to fit within the recesses **53** of each pallet. In this case three of the drums are shown being transported by a single lift truck.

Refer now to FIG. 7 which shows a modified form of pallet in accordance with the invention. The pallet **80** is similar in all respects to the pallet **10** except that the upper supporting plate **82** is provided with an upwardly extending circular flange **86** rather than a downwardly extending flange. The upper plate **82** is in this instance connected to a hollow tubular supporting post **94** in any convenient manner as by welding. The lower edge of the post **94** is similarly rigidly secured to a lower supporting plate **90** having a downwardly extending circular peripheral flange **92** with a lower edge **88** which serves as a support when the pallet is placed on the ground. The diameters of the flanges **86** and **92** are equal and are of an appropriate size to just fit over the lower and upper edges respectively of one of the drums **32**. If a permanent connection is to be made between the pallet and the drum, the upper edge of the flange **86** is welded to the outside surface of the drum wall **34**.

Refer now to FIGS. **8** – **11** which illustrate another form of the invention. A designated pallet **100** is made of just sufficient size to accommodate a single drum. The pallet **100** includes in its construction a drum engaging and supporting member or ring **102** formed from a suitable material such as angle iron having a vertically disposed flange **104** and a horizontally disposed flange **106**. The angle iron has been bent into a circular shape and is welded to itself at **108**. The flange **104** as seen in the figure fits telescopically over the base of a steel drum **130**. It is the telescopic connection between the drum engaging member **102** and the base of the drum that prevents lateral sliding movement between the drum and the pallet. Secured to the bottom of the drum engaging member are two supporting legs **110** and **112** formed from metal tubes secured at **114** to the drum engaging element in parallel relationship and each is positioned inwardly a slight distance from the opposite sides of the drum engaging element **100**. Secured to the lower surface of the legs **110** and **112** at their ends are cleats **116**, **118**, **120** and **122** which extend downwardly a short distance for the purpose of retaining the pallet **100** and the drum supported thereon securely in position on the top of a similar drum as seen in FIG. **11** when the drums are placed in stacked relationship as will be described more fully below. It should be noted that the length of each of the legs **110** and **112** is slightly less than the diameter of the drum engaging ring **102**. The legs will therefore not interfere with one another when drums are tightly stacked in side-by-side relationship. At the same time, however, the cleats secured to the base of the legs will prevent the drums above from sliding relative to the drums below when they are stacked. In addition, the cleats act as pedestals when the drums are placed on the floor thus holding the drums above the floor so as to promote better drainage and reduce rust damage.

When the pallet **100** is to be used, the forks **124** and **126** of a lift truck (not shown) are placed between the legs **110** and **112**. The pallet **100** and the drum **130** can then be lifted and transported to the desired location.

The drum **130** has an opening **134** at its upper end. The lower portion or base of the drum **130** is placed within the drum engaging element **102** with the vertical flange **104** extending upwardly over the adjacent to but spaced from the lower edge of the container **130** and slightly above the chime **139** (FIG. **11**). The pallet **100** is then secured to the base of the drum in any suitable manner. One preferred method of securing the pallet to the drum consists of placing a tough sheet of a resilient material such as a reinforced rubber sheet **140** between the flange **104** and the side wall of the drum **130**. Segments **142** of the flange **104** are then bent centrally (FIGS. **10** and **11**) to thereby tightly compress the sheet **140** against the side of the drum with the upper edge of the segments **142** overlapping the upper edge of the chime **139**. In this way the base of the drum **130** is securely fastened to the upper edge of the pallet **100** and the overlap connection between the bent portions **142** and the chime **139** will reliably prevent the removal of the drum from the pallet. Moreover, the resilient material between the flange and the side wall of the drum will protect the base of the drum from damage when the pallet is attached.

In accordance with the invention, the drum pallet **100** can be used as a temporary pallet but is preferably employed as a permanent drum base that makes it possible for the drum to be easily handled and stored with a conventional fork lift truck.

It is important to note that the connection between the drum and the pallet is located at the base of the drum and is a direct connection with the pallet. Thus, unlike metal strapping the connection is not subject to damage nor will it obstruct the opening in the drum.

It is apparent that many modifications and variations of this invention as hereinbefore set forth may be made without departing from the spirit and scope thereof. The term "shipping drum" is intended to include fiber and steel drums and barrels.

I claim:

1. A low cost pallet of simplified construction for receiving and transporting common fiber or metal shipping drums, said pallet comprising a circular drum-engaging ring, said ring comprising at least one piece of elongated strip material having a circular, vertical web and a circular horizontal web integral with the vertical web, said ring being of just sufficient size to accommodate a single drum, said vertical web being constructed and arranged to fit telescopically over the base of the drum, a plurality of elongated horizontally disposed legs rigidly secured to the lower surface of the ring, said legs being related to one another in such a way as to define openings below the ring into which the forks of a lift truck can be inserted, said legs being held together solely by the rigid connection between them and the drum engaging ring and cleats on the lower surface of the legs defining a recess for receiving the upper end of one of the drums for preventing the drums on top from sliding off of the upper edge of the drum engaged by the cleats.

2. The apparatus according to claim **1** wherein the legs comprise parallel tubes.

3. The apparatus according to claim **1** wherein the legs comprise parallel elongated elements having a length just slightly shorter than the diameter of the drum engaging element to thereby enable the pallets to be placed adjacent one another without the legs coming into contact.

4. The apparatus according to claim **1** wherein said cleats are provided at each end of each of the legs and extend downwardly therefrom to overlap and prevent lateral sliding movement between the pallet and a drum positioned beneath the pallet and between said cleats.

* * * * *