(No Model.) 2 Sheets—Sheet 1.

G. GATES.

CONCENTRATOR.

No. 590,789. Patented Sept. 28, 1897.

Fig. 1.

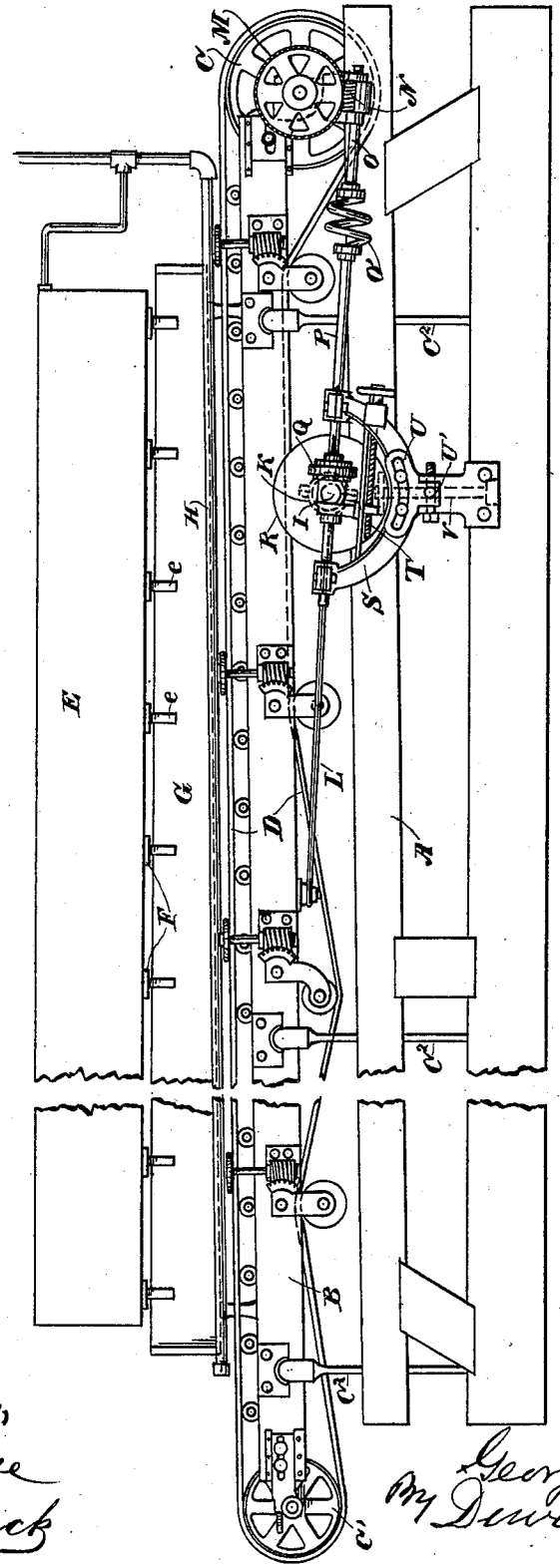

Fig. 6.

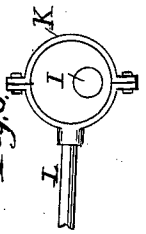

Fig. 2.

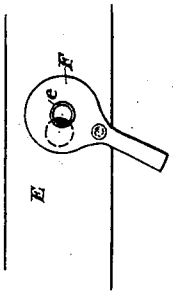

Witnesses,
H. Turner
H. F. Ascheck

Inventor
George Gates
By Dewey & Co. Attys

THE NORRIS PETERS CO., PHOTO-LITHO., WASHINGTON, D. C.

(No Model.) 2 Sheets—Sheet 2.

G. GATES.

CONCENTRATOR.

No. 590,789. Patented Sept. 28, 1897.

Fig. 3.

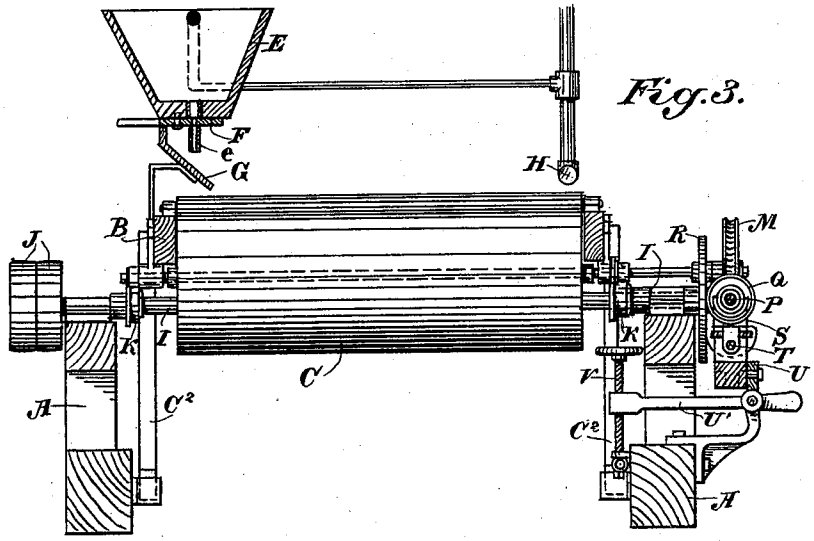

Fig. 4

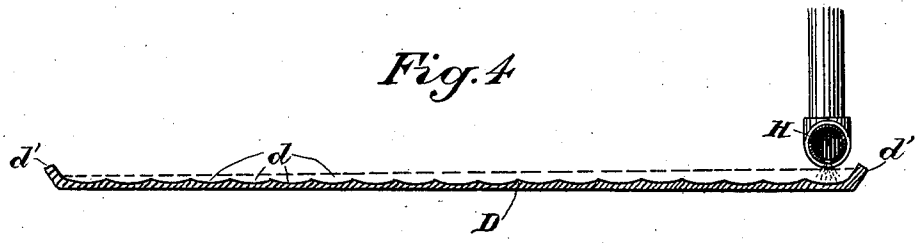

Fig. 5.

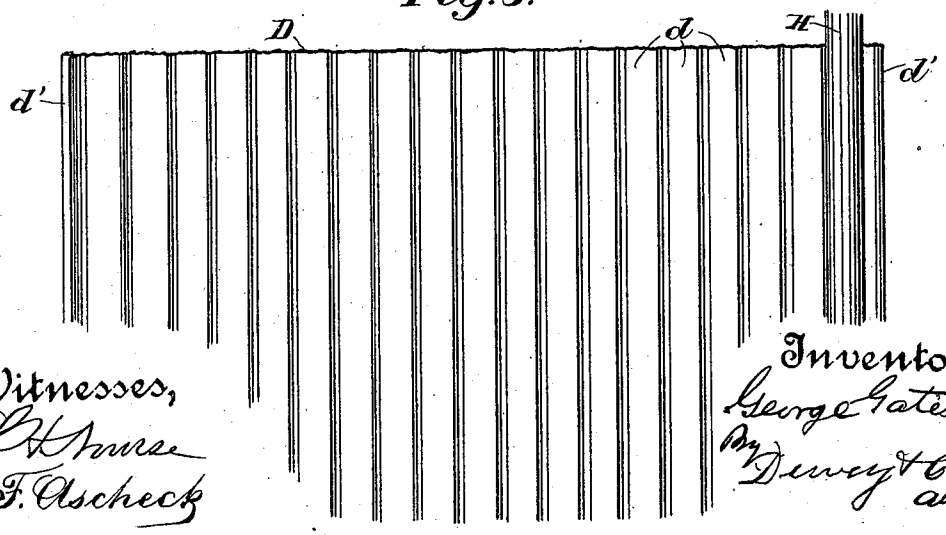

Witnesses,
J. F. Ascheck

Inventor
George Gates
By Dewey & Co.
Attys.

THE NORRIS PETERS CO., PHOTO-LITHO., WASHINGTON, D. C.

UNITED STATES PATENT OFFICE.

GEORGE GATES, OF JACKSON, CALIFORNIA.

CONCENTRATOR.

SPECIFICATION forming part of Letters Patent No. 590,789, dated September 28, 1897.

Application filed January 2, 1897. Serial No. 617,696. (No model.)

To all whom it may concern:

Be it known that I, GEORGE GATES, a citizen of the United States, residing at Jackson, county of Amador, State of California, have invented an Improvement in Concentrators; and I hereby declare the following to be a full, clear, and exact description of the same.

My invention relates to improvements in endless-traveling-belt concentrators of that class in which the belt is adapted to travel over drums at each end of the frame.

It consists in certain details of construction, which will be more fully explained by reference to the accompanying drawings, in which—

Figure 1 is a side elevation of my concentrator. Fig. 2 is a bottom view of the hopper, showing one of the valves. Fig. 3 is a transverse section, the belt being omitted. Fig. 4 is a similar section through the belt. Fig. 5 is a plan view of the same. Fig. 6 is a detail of one of the eccentrics K and a portion of one of the rods L.

A is the main frame, fixed at any suitable point, and B is a supplemental belt-carrying frame supported upon arms C^2, extending upwardly from the main frame and sufficiently flexible to allow the supplemental frame to be oscillated longitudinally by suitably-connected mechanism to be hereinafter described.

At each end of the supplemental frame B are the pulleys or drums C C′, the first being situated at the higher end of the frame and the other at the opposite or lower end. The frame is vertically adjustable, so that the inclination of the belt D, which passes over the drums C C′, may be regulated to suit the requirements for proper concentration of the material which is employed. This belt is peculiarly constructed, being made, as shown in transverse section, with a series of longitudinal depressions *d* extending the entire length of the belt, forming endless channels of about two inches in width and one-sixteenth of an inch deep each. These channels are made across the full width of the belt, which may be as much as four feet, and the edges of the belt have upturned flanges *d*′, which prevent the overflow of the pulp on either side of the belt.

The drums C C′ are so journaled that the belt is about one-half inch lower upon one side than upon the other, the object being to cause the pulp or material to be concentrated to gradually work its way from one side toward the other in a diagonal line, as will be hereinafter more fully described.

In order to supply the belt with material to be worked, I have shown a trough or hopper E, supported above and parallel with the higher edge of the belt. This trough or hopper extends approximately within a foot or a foot and a half of each end of each of the drums C C′, and the bottom is perforated with holes at intervals of about eighteen inches, through which the pulp may escape from the hopper. Beneath these holes, which have bushings fitted in them to prevent undue wear, are valves or gates F, pivoted to the bottom of the hopper, having handles extending out at one side by which they may be moved. These gates have openings made through them coincident with and smaller than the openings in the bottom of the hopper, with short tubes *e*, which may extend downwardly, so as to discharge the pulp. These gates may be moved by their handles, so as to increase or diminish the discharge to suit the exigencies of the working.

The pulp is fed into the end of the trough which is at the higher side of the belt D, so that the heavier portion of the pulp will be delivered through the nearest of the openings in the bottom and the lighter will be carried farther up, so that the very lightest of the material will be discharged nearer to the higher end of the belt. Any surplus water which may be contained in this trough may be discharged or carried entirely across the upper end of the belt by a pipe, so as to be delivered into the lowermost of the longitudinal channels *d* of the belt to assist in washing the deposit in this channel over the lower end of the belt, as will be hereinafter described.

The pulp and material which is discharged through the valves and tubes *e* from the trough E falls upon an inclined board G, suitably supported from the oscillating frame B and partaking of its motion. The pulp is thus shaken by the oscillations of the frame and gradually drips off the edge of the board, falling into the channels *d* nearest to the upper edge of the belt D. The belt is caused

to gradually travel around the drum C C′, its upper surface moving from the lowermost drum C′ toward and over the uppermost drum in the manner of this class of concentrators, and the pulp and the belt-frame being subjected to a longitudinal shaking motion at the same time the pulp is gradually settled, with the heavier sulfurets and other valuable material, into the first of the longitudinal grooves *d*, thence flowing over into the following ones it takes a diagonal direction as it passes across the belt, depositing the sulfurets and heavier valuable portions successively from the upper toward the lower side, my practice showing that the upper portion of this valuable material will be caught in the first half dozen or more of the grooves *d* and the remainder of the lighter and worthless material will travel across the belt and eventually be found in the lowermost of the channels *d* next to the inclined rib or flange on the lower edge of the belt. The constant shaking causes the lighter and worthless material to gradually flow down over the drum at the lower end of the belt, while the heavier valuable sulfurets will pass over the upper drum and be washed off in a suitable tank below, through which the belt passes in the manner usual for such concentrators. A pipe H extends above the lowermost groove *d* of the belt, this pipe having holes along the bottom through which water is discharged upon the belt, and this serves to constantly wash away the sand which has been delivered into this groove, discharging it over the lower end drum. The water which, as previously described, was discharged from the upper end of the feed-trough E may also be employed to wash this groove or channel, if desired, as previously described.

The movements of the belt are produced as follows: Across the main frame A is journaled a shaft I, having fixed upon it at one end pulleys J, through which power may be applied to rotate it. Upon this shaft are fixed eccentrics K, the straps of which are connected with the frame B by rods L, so that when the shaft I is rotated the eccentrics will produce a longitudinal vibration of the frame B and the belt. In order to advance the belt gradually from the lower end toward the upper end, I have shown a worm-wheel M, fixed to the shaft of the upper belt-drum C, and this is engaged by a worm or screw N, which is fixed upon the shaft O, journaled to the frame B.

P is another shaft having upon it a roller Q, the edge of which is caused to press against the flat side of a disk R, which is fixed upon the end of the driving-shaft I. The shaft P is journaled in boxes upon the segment S, the use of which will be hereinafter more fully described, and the adjacent ends of the shafts O and P are connected by a flexible and elastic spiral spring O′, forming a number of coils, as shown. This spring has a sufficient rigidity to transmit the rotation of the shaft P through itself to the shaft O, thus causing the worm N to revolve and by its engagement drive the drum C, but the coils of the spring allow the necessary endwise oscillating movement of one of the shafts while the other receives no such movement, thus allowing the power to drive the belt to be continuously communicated without being in any way interfered with by the oscillations of the reciprocations of the belt and its frame. In order to regulate the speed at which the belt is thus caused to travel over its drums, the friction-roller Q is moved nearer to or farther from center of the disk R by means of a screw T, which passes through a nut connected with the slidable box of the roller Q, this box being thus movable toward or from the center of the disk R, and the roller Q, moving on a feather in the shaft P, may be thus moved to any desired point between the center and periphery of the disk R. When it is nearest to the center of the disk, it will have the lowest speed, and when moved nearest to the periphery of the disk it will have a correspondingly greater speed imparted to it, and through its shaft P and the connected shaft O the speed will be imparted to the drum C, which carries the belt.

The arc segment S on which the shaft P is journaled is attached by bolts to a carrier U, which practically forms one arm of a bell-crank lever, the end of which is fulcrumed, and the other arm U′ extends inwardly into line with a vertical screw V, which passes through a nut in the arm U′, so that when the screw is turned this end of the arm is movable up or down about the fulcrum-pin at the angle. When this arm U′ is moved up, it will throw the segment a little outward, thus carrying the roller Q away from the face of the disk R, and it is then in condition to be moved longitudinally upon the shaft P, as previously described, to change the speed of the belt. As soon as it has been moved to the proper distance in either direction the screw V is turned so as to again bring the roller Q into contact with the disk R, and the movement of the belt recommences at the changed rate of speed.

Whenever the frame B is moved so as to change its angle and that of the surface of the traveling belt, it will also change the position of the shaft O by raising or lowering it with the frame from which it is supported, and in order to maintain the shaft P approximately in line with O whenever such change occurs the segment S, upon which the shaft P is journaled, is secured to the part U by bolts passing through a segmental slot made in the part U. When any change is made in the angle of travel of the belt, the nuts of these bolts are loosened and the segment S is moved about its center of motion, as permitted by the slot in the part U, until the shaft P is brought into proper alinement with the new position of the shaft O. The segment is then fixed by again tightening the nuts.

Having thus described my invention, what I claim as new, and desire to secure by Letters Patent, is—

1. A concentrator consisting of an endless belt having parallel and endless grooves or channels formed upon its surface and upwardly-turned edge flanges, supporting and driving drums around which the belt passes and through which motion is communicated to it, said drums being journaled so that one edge of the belt is slightly lower than the other, a feed trough or hopper extending parallel with the upper edge of the belt having openings in the bottom through which the pulp is delivered from the hopper, valves controlling said openings and having openings through them coincident with and smaller than the openings in the hopper, and an inclined board supported from the oscillating frame for distributing the pulp upon the higher edge of the belt.

2. In a concentrator, an endless belt having its surface formed with endless parallel longitudinal grooves or channels and edge flanges upon the belt, supporting and driving drums with means whereby the belt is gradually advanced over them, said drums being journaled so that one edge of the belt is higher than the other, a supply-hopper independently supported parallel with and above the higher edge of the belt having holes in the bottom through which the pulp is delivered, pivotally-secured valves having depending tubes with openings or passages through them coincident with and smaller than the openings in the hopper, a distributer consisting of an inclined surface supported from the belt-frame and partaking of its longitudinally-oscillating motion, whereby the pulp is distributed into the higher of the parallel grooves or channels and is gradually worked over the intervening ridges diagonally from one side of the belt to the other, a controlled water-supply consisting of a perforated pipe extending along one side of the belt whereby the material which is deposited in the lowermost of the channels may be washed off over the lower end of the belt while the heavier and valuable particles deposited in the uppermost of the series of channels are carried over the upper end of the belt.

3. In a concentrator consisting of an endless belt passing over drums upon a longitudinally-oscillating frame having a worm-wheel and screw by the rotation of which the belt is caused to travel over its supporting-drums, a shaft in line but out of contact with the worm or screw shaft having an elastic spiral spring connecting the two so that power may be transmitted from one to the other, a fulcrumed segment carrying boxes in which the driving-shaft is journaled, a roller movable longitudinally upon a feather on the shaft and an actuating-screw therefor, a disk fixed upon the main transverse power-shaft with its face parallel with the line of travel of the roller whereby the latter may be brought into contact with any portion of the surface of the disk from the center to the periphery so as to increase the speed at which the belt and connected parts travel and means for moving the segment to disengage the roller from the face of the disk.

4. A concentrator consisting of an endless belt passing around supporting driving-drums which are journaled upon a longitudinally-oscillating frame, a worm-wheel and a worm and worm-shaft supported by said frame through which power is transmitted to rotate the drums and cause the belt to travel around them, a shaft journaled upon a movable segment in line with and out of contact with the worm-shaft having an intermediate spiral-spring connection whereby power is transmitted while allowing the worm-shaft to reciprocate while the power-shaft rotates without reciprocation, a roller slidable upon a feather upon said power-shaft, a disk fixed upon the main driving-shaft at right angles with the roller so that the roller may be brought into contact with the face of the disk at points between the center and periphery thereof, a bell-crank lever upon which the shaft and roller-carrying segment is fixed, a screw whereby said lever may be tilted to move the segment and disengage the roller from the face of the disk, means for moving the roller along its shaft while out of contact with the disk, the bell-crank-lever-actuating screw being moved to again throw it into contact with the disk when it has been moved to the desired point.

5. In a concentrator, an endless belt passing around supporting and driving drums journaled upon a longitudinally-oscillating frame, a worm-gear and screw supported in said frame through which motion is transmitted to propel the belt, a power-shaft journaled upon an adjustable segment in line and out of contact with the screw-shaft, a spiral-spring connection between the ends of said shafts whereby the longitudinal oscillation of one is permitted independent of the other, means for adjusting the power-shaft with relation to the screw-shaft to compensate for raising and lowering the belt-carrying frame, consisting of a segmental slotted support for the shaft and means for turning it so as to change the angle of the power-shaft and maintain it approximately in line with the screw-shaft.

In witness whereof I have hereunto set my hand.

GEORGE GATES.

Witnesses:
S. H. NOURSE,
JESSIE C. BRODIE.