United States Patent [19]

Evenson

[11] **Des. 243,604**

[45] ** **Mar. 8, 1977**

[54] **LIST FINDER**

[75] Inventor: **Mel Evenson,** Santa Monica, Calif.

[73] Assignee: **Eldon Industries, Inc.,** Hawthorne, Calif.

[**] Term: **14 Years**

[21] Appl. No.: **541,425**

[22] Filed: **Jan. 16, 1975**

[51] **Int. Cl.** ..... **D19—02**

[52] **U.S. Cl.** **D19/76**

[58] **Field of Search** D19/76; 40/104.01, 104.05

[56] **References Cited**

U.S. PATENT DOCUMENTS

2,551,213	5/1951	Lang	40/104.01
2,575,482	10/1950	Berger	40/104.01
3,820,264	6/1974	Mori	D19/76

OTHER PUBLICATIONS

Office Products, 2/73, p. 12.

Primary Examiner—Joel Stearman
Assistant Examiner—George P. Word
Attorney, Agent, or Firm—Edward D. O'Brian

[57] **CLAIM**

The ornamental design for a list finder, substantially as shown and described.

DESCRIPTION

FIG. **1** is a perspective view of a list finder showing my new design;
FIG. **2** is a front elevational view;
FIG. **3** is a rear elevational view;
FIG. **4** is a right-end elevational view;
FIG. **5** is a bottom plan view thereof; and
FIG. **6** is a perspective view of a modified form of the list finder.

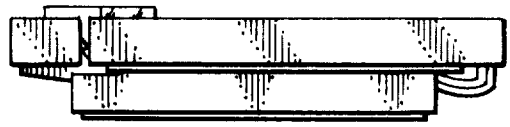

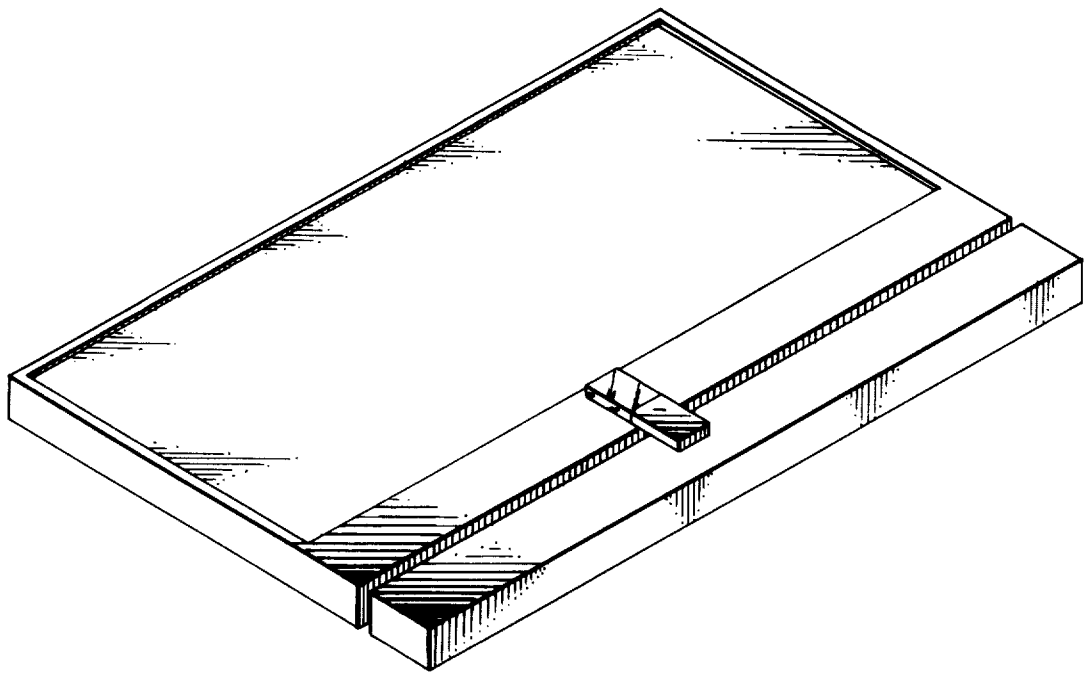

FIG. 1.

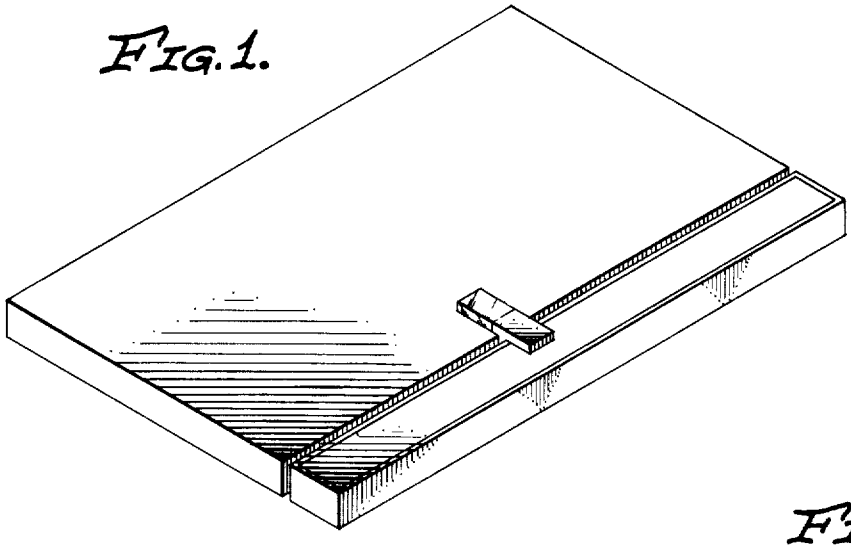

FIG. 2.

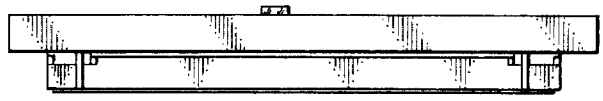

FIG. 3.

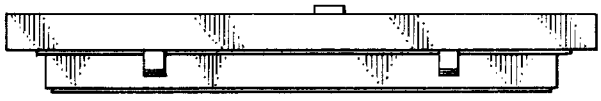

FIG. 4.

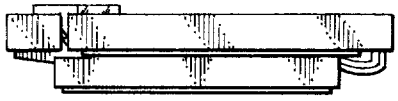

FIG. 5.

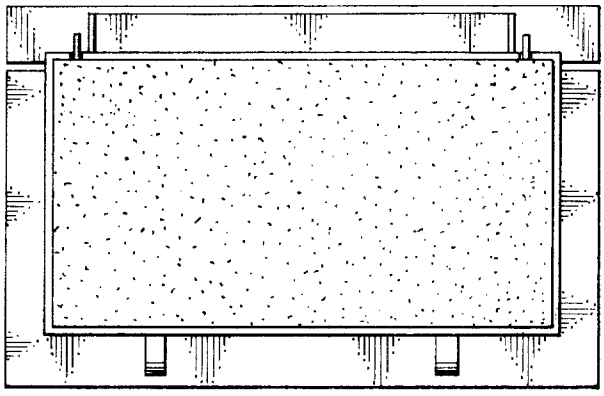

FIG. 6

