Aug. 26, 1969 C. MOZOLF 3,463,141

MALE CONTRACEPTIVE

Filed May 15, 1967

Fig. 1.

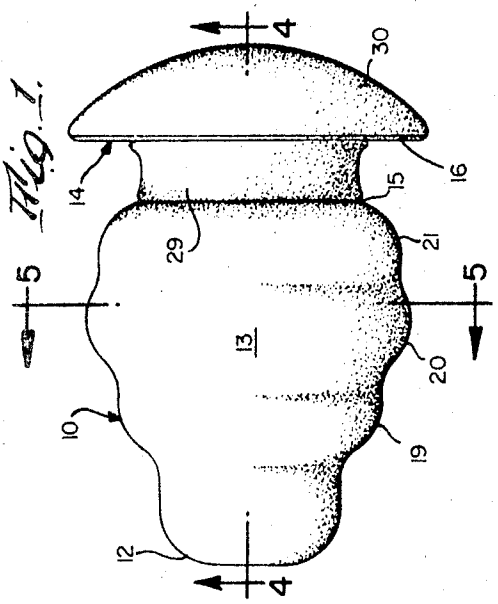

Fig. 2.

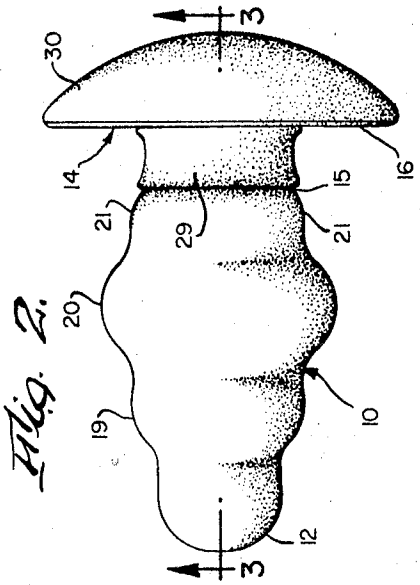

Fig. 3.

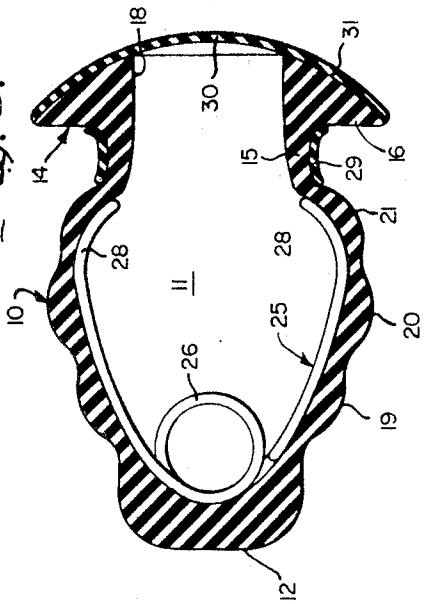

Fig. 4.

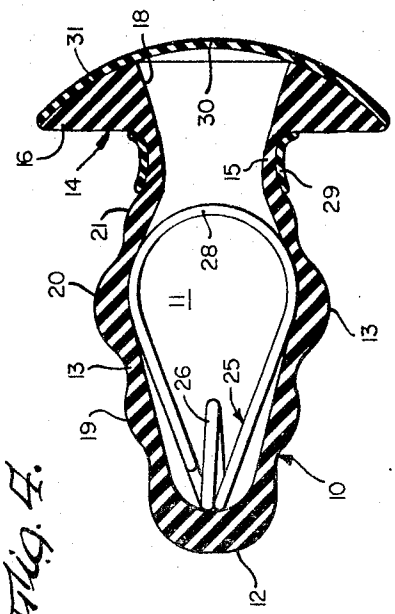

Fig. 5.

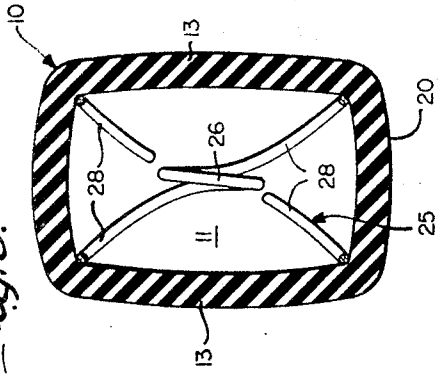

INVENTOR.
Casimir Mozolf
BY
Popp and Sommer
ATTORNEYS

United States Patent Office

3,463,141

Patented Aug. 26, 1969

3,463,141

MALE CONTRACEPTIVE

Casimir Mozolf, 356 N. Ogden St.,
Buffalo, N.Y. 14206

Filed May 15, 1967, Ser. No. 638,395
Int. Cl. A61f 5/37, 5/42, 5/44, 5/48; A61b 19/00
U.S. Cl. 128—1 2 Claims

ABSTRACT OF THE DISCLOSURE

The contraceptive is a soft, resilient, moisture impervious, elongated plug insertable endwise, when moistened, into the orifice of the urethra without discomfort and having sufficient area of contact, and preferably a series of endless external transverse ribs, to prevent ejection in response to fluid pressure in the urethra. Desirably the body is a hollow rubber body containing a distending spring and a head is provided to limit insertion of the body as well as to facilitate manual removal. The device can also be used, in the event of incontinence, to prevent escape of urine.

The present invention relates to a male contraceptive arranged to plug the urethra at the discharge orifice thereof. Objects of the invention are to provide such a male contraceptive which is easy manually to insert and remove without discomfort and requiring no special applicator, which can be worn with comfort, and which is effectively retained when worn to prevent the discharge of fluid which may tend to eject it.

In the drawings, FIG. 1 is a side elevational view of the contraceptive. FIG. 2 is a top plan view thereof. FIGS. 3–5 are sections taken on the correspondingly numbered lines of FIGS. 1 and 2.

The contraceptive comprises an elongated hollow flexible rubber body **10** forming a chamber **11** having a rounding head **12** at its inner end and having side walls **13** which are shaped so that the body is of progressively enlarging cross sectional size toward the outer end **14** of the body. This outer end **14** is formed to provide a reduced neck **15** and part of an enlarged head **16**, the chamber **11** having an open end **18** in this head. A series of endless external ribs transversely encircle the body **13**, these comprising a smallest diameter rib **19** near the end head **12**, a largest diameter rib **20** near the center of the body, and a smallest diameter rib **21** near the neck **15**.

A feature of the invention is that the external transverse dimension of the body in a vertical direction (FIG. 1) is greater than its external transverse dimension in a horizontal direction (FIG. 2) and that the body is soft and resilient. This resilience is provided by an internal wire spring **25** having a coil **26** nested in the end head **12** and loop-shaped arms **28** which form continuations of the ends of the coil **26** and extend lengthwise of the body **10** and press outwardly against its side walls **13** so as to distend the rubber body **10** laterally in all directions. The neck **15** is kept from distending by a rubber band **29**, and the head **16** is completed by a flexible end disk **30** which can be adhesively secured to the end face **31** of the head **16** so as to cover its open end **18**.

In use, the body **10** is moistened as by saliva, and its head **12** inserted into the orifice of the urethra with its

long or vertical dimension upright, thereby to conform to the cross sectional shape of the urethra. The body **13** is then fully inserted by end pressure against the head **16**, **30**, the walls of the urethra serving to contrast the transverse size of the body **13**. When fully inserted, the head **16** is against the orifice of the urethra and the expansive pressure of the spring **25** insures retention of the body in the urethra. The body **13** has sufficient external area in contact with the walls of the urethra to insure against ejection in response to fluid pressures in the urethra and prevention of such ejection is further insured by the ribs **19**, **20** and **21**.

The device can easily be removed from the urethra by pinching the male organ behind the small end of the device and thereafter pushing to force out the device.

I claim:

1. A male contraceptive, comprising an elongated, manually soft, hollow flexible walled rubber body having a continuous moisture impervious wall at its inner end and extending to adjacent its outer end, the transverse external dimension of said body in one direction being substantially greater than its transverse external dimension perpendicularly to said one direction, a spring wire coil arranged within said body and having arms forming continuations of the ends of said coil and extending lengthwise of and in contact with opposite interior sides of the flexible walls of said body and exerting an expansive force against said walls, a head at said outer end, a neck intermediate said head and body and integral therewith, and a band encircling said neck to prevent substantial expansion thereof, said body being compressible by the walls of the urethra to being insertable, when moistened and with its said inner end leading, into the orifice of the urethra without discomfort, with the greater transverse external dimension of said body generally aligned with the greater transverse dimension of the urethra, said head being of larger size than said orifice to limit such insertion of said body into the urethra and to facilitate its manual removal therefrom, and said elongated body having sufficient area of contact with the walls of the urethra to resist ejection in response to fluid pressure in the urethra.

2. A male contraceptive as set forth in claim **1** wherein said body has a series of integral endless ribs transversely encircling said body.

References Cited

UNITED STATES PATENTS

2,649,854	8/1953	Salm	128—1
2,763,265	9/1956	Waters	128—343
3,042,021	7/1962	Read	128—1
3,316,895	5/1967	Lewis	128—2
3,373,746	3/1968	White et al.	128—294

FOREIGN PATENTS

268,345	12/1914	Germany.
352,014	4/1922	Germany.

DALTON L. TRULUCK, Primary Examiner

U.S. Cl. X.R.

128—341