June 7, 1955 V. P. STEELE 2,710,119

JUICE PUMP

Filed June 11, 1954 2 Sheets-Sheet 1

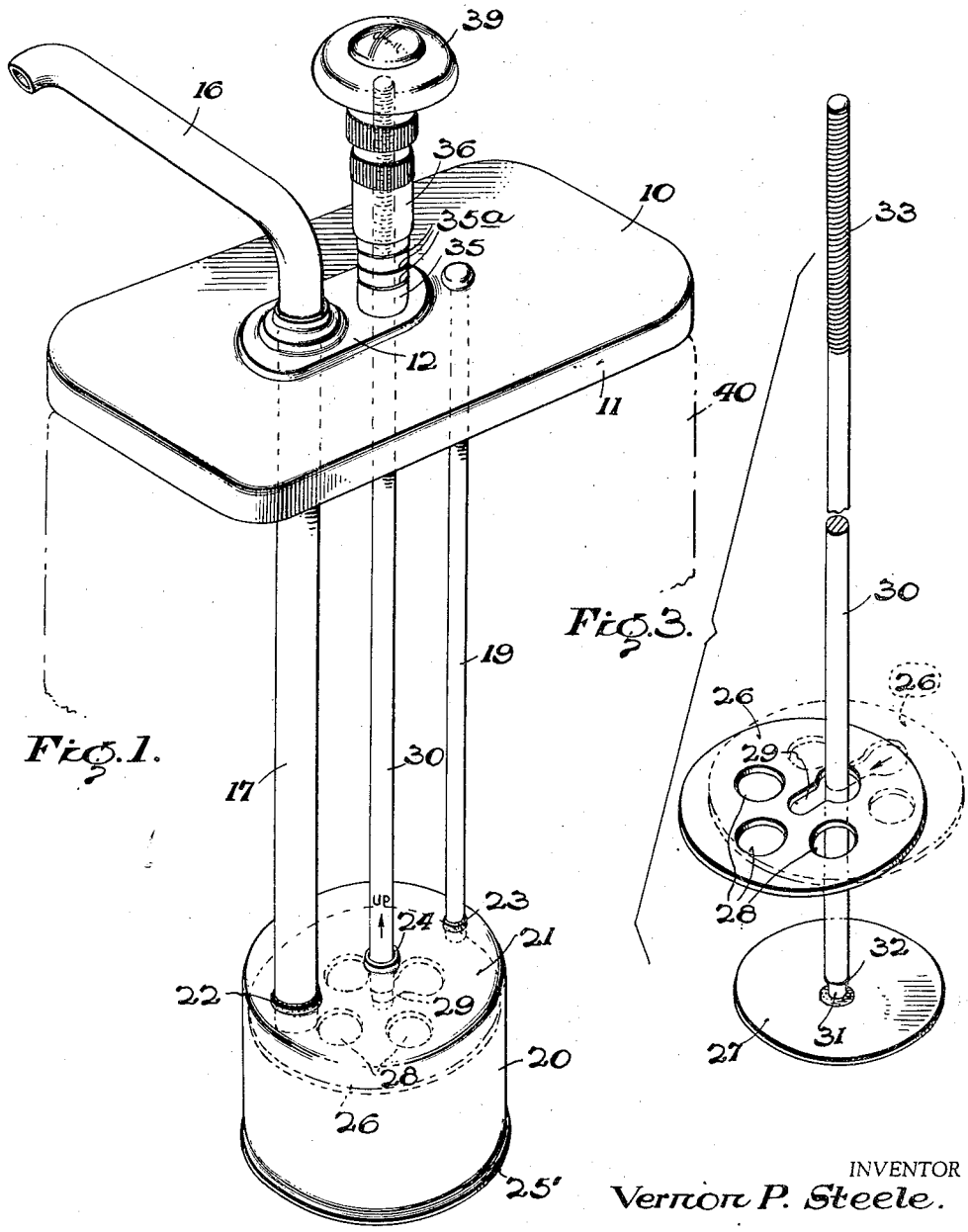

Fig. 1.

Fig. 3.

INVENTOR
Vernon P. Steele.

BY Walter J. O'Boyle

ATTORNEY

June 7, 1955 V. P. STEELE 2,710,119

JUICE PUMP

Filed June 11, 1954 2 Sheets-Sheet 2

Fig. 2.

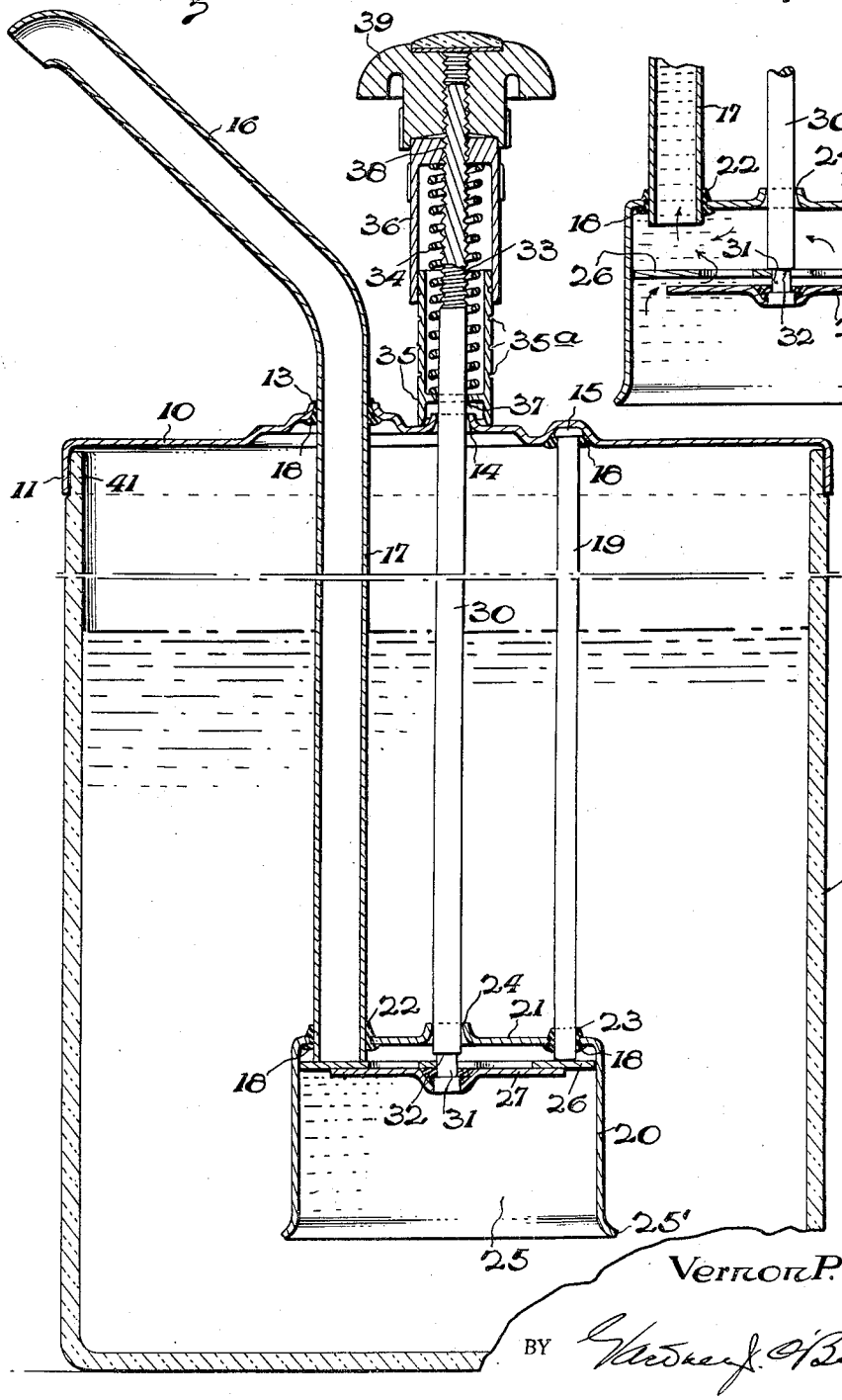

Fig. 4.

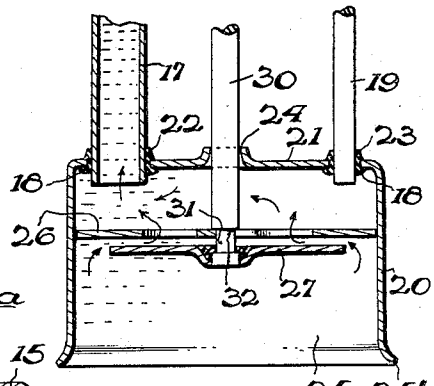

INVENTOR

Vernon P. Steele.

BY

ATTORNEY

United States Patent Office

2,710,119

Patented June 7, 1955

1

2,710,119

JUICE PUMP

Vernon P. Steele, Noroton, Conn., assignor to Kenco Products Corporation, Englewood, N. J.

Application June 11, 1954, Serial No. 436,202

5 Claims. (Cl. 222—340)

This invention relates to fluid dispensing pumps of the type used in soda fountains, and, more particularly, to an improved valve mechanism therefor.

Syrup pumps and milk pumps are required to be completely disassembled and cleaned periodically, depending on the type of material handled. Thus, pumps used for the dispensing of milk products are required to be cleaned daily. The ideal pump should have as few moving parts as possible, and should be readily assembled and disassembled, solely by hand, and without requiring the use of any tools whatever. Additionally, biasing springs and operating and control elements of the pump should never be exposed to contact with the fluids being dispensed.

The desiderata set out immediately above are accomplished and embodied in the novel pump of the present invention in which an improved valve mechanism is incorporated in a measuring cup of special design and spring biasing means for the pump is located on the outside of the cover.

It is, therefore, an object of the present invention to provide an improved sanitary syrup and milk products fluid dispensing pump of novel design, and one which is readily disassembled for cleaning, and re-assembled, solely by hand, and without requiring the use of any tools whatever.

Another object of the present invention is the provision of a spring-biased pump rod and valve mechanism for syrup dispensing pumps in which the valve elements are disassembled by releasing the pump rod from its normal spring-biased position.

A further object of the present invention is the special mounting of a ported valve plate on the pump rod whereby it is retained in operative position only when positioned within the measuring cup of the pump.

An additional object of the invention is the provision of unitary control and biasing means for the movable parts of the pump mechanism, whereby the throw or travel of the pump piston in the dispensing cup or chamber is controlled from the outside of the pump.

Other objects of the invention include a syrup or like pump made of sheet metal parts which are readily assembled and disassembled, solely by hand, and a composite ported piston assembly, normally spring-biased into inoperative position, and depressible into loading or filling position against the spring bias, discharge of fluid being effected by retraction of the piston in the pump in response to the spring bias of the pump rod.

With these and other objects in view, which may be incident to my improvements, the invention consists in the parts and combinations to be hereinafter set forth and claimed, with the understanding that the several necessary elements, comprising my invention, may be varied in construction, proportions and arrangement, without departing from the spirit and scope of the appended claims.

In order to make my invention more clearly understood, I have shown in the accompanying drawings means

2

for carrying the same into practical effect, without limiting the improvements in their useful applications to the particular constructions, which for the purpose of explanation, have been made the subject of illustration.

In the drawings, like numerals refer to similar parts throughout the several views, of which

Figure 1 is a perspective view of a novel pump assembly, as mounted on a syrup jar, shown in dotted lines;

Fig. 2 is a vertical longitudinal sectional view of the assembly shown in Fig. 1;

Fig. 3 is a perspective view of the piston and valve assembly; and

Fig. 4 is a fragmentary detail of the pump rod and piston support, the piston being shown in unseated position.

Referring to the drawings, and more particularly Figs. 1 and 2, the novel pump assembly is comprised of the following elements: a cover **10**, pump chamber **20**, plunger **30**, and a container **40**. The container **40** may be formed from metal, plastic, porcelain, or any other suitable sanitary material, adapted to contain a body of fluid, for example, syrup, milk or other fluid to be dispensed. The container is usually of rectangular cross-section, with rounded corners throughout, to permit easy cleaning, and is provided with an open top defined by a raised lip **41**. The cover **10** is generally conformed to the lip **41** of the container and includes a peripheral skirt **11**, adapted to fit on and over the lip in slip-fit engagement. The cover is provided with a raised central section **12**, having sides generally parallel to the sides of the cover. A pair of aligned apertures **13**, **14** are formed in the central boss **12**, and a raised portion **15**, is formed in the cover in alignment with apertures **13**, **14**. A dispensing spout **16** is formed as an angular extension of discharge tube **17**, which is fitted in aperture **13**, and fixedly secured therein, as by silver solder, indicated generally by the numeral **18**. A stay rod **19** is fitted in raised portion **15** of the cover, and is soldered in place by the usual solder joint **18**.

The discharge tube **17** and the stay rod **19** are severally fitted into aligned apertures **22**, **23**, formed in the inverted top **21**, of pump chamber **20**, and are fixedly secured in place by the usual silver solder joints **18**. It will be seen that the cover **10**, pump chamber **20**, dispensing tube **17**, and stay or spacing rod **19**, conjointly form a structural entity which is characterized by a wholly open structure and one in which all the parts are readily available for cleaning and drainage. The spout **16** is offset at a slight angle from the tube **17**, whereby the tube and spout can be easily cleaned with a wire-handled brush or swab. The skirted cover **10** and bossed section **12**, together with the aligned apertures **13**, **14** and raised portion **15**, can be formed in a single punch and press operation from a sheet metal blank of suitable gauge thickness. Owing to the special design of the parts, rigid tolerances do not have to be observed, and a high degree of skill is not required of the punch and press operatives.

The pump chamber **20** is a cup-shaped, drawn sheet metal member, having a closed top **21** and an open bottom **25**, the peripheral portion thereof being outwardly flared as at **25'**. The top is provided with a central aperture **24**, together with bilaterally disposed aligned apertures **22**, **23**, previously described. A piston **26** is conformed to the inner surface of the wall of member **20** and is reciprocable therein on pump or piston rod **30**. The piston **26** is loosely mounted on the rod **30**, and is adapted to be supported on and by a fixed disk or piston plate **27** which is silver soldered or otherwise secured on the bottom end of rod **30**. The piston **26** is provided with a plurality of ports or apertures **28**, desirably cir-

cular in shape, and severally arranged to have their centers lie on a circle having a center coincident with the center of the piston. A radial slot **29** (Fig. 3) is formed by and between the center of the piston and one of the apertures **28**. The slot **29** is much narrower than the diameter of the aperture in which it embouches, as will be described more in detail hereinafter.

The piston, as noted, is loosely mounted on the piston rod **30**, and the ports **28** are severally covered by the plate **27**, when the piston is in a state of rest at either end of the filling or discharge stroke.

The piston rod **30** comprises a body portion having a reduced bottom end **31** forming a shoulder **32**, and a threaded top end **33** which extends well above the top cover. The bottom end **31** of the rod is silver soldered to the supporting plate **27**, and its diameter is slightly greater than the width of the radial slot **29** so that when the piston rod is passed through the appropriate aperture **28** of the piston, the latter can be seated on the rod by sliding it in such a manner as to have the radial slot **29** fit on and over the reduced section **31** of the piston rod. It will be seen that when the piston rod is passed upwardly through central aperture **24** in the top of the pump chamber and the piston is fitted in the said chamber, the piston is locked in position and has a limited upward movement on section **31** of the rod, which upward movement is limited by the shoulder **32** of the rod. By virtue of the limited reciprocal movement of the piston with respect to the cooperating fixed plate **27**, a valve action is established, whose function will be adverted to more in detail hereinafter.

The actuating mechanism is comprised of a compression spring **34**, fitted on and over the threaded end of piston rod **30**, and encased in a telescoping cage comprised of a bottom cup **35** and a top cup **36**. The bottom cage member **35** is centrally apertured, as shown at **37**, and the upper cage member **36** is provided with a threaded axial aperture **38** adapted to threadedly engage the threaded top end **33** of piston rod **30**, which is passed through registering apertures **14** and **37** in the cover **10** and bottom cage member **35**, respectively. The member **35** may be provided with spaced calibration marks or grooves **35*a***, as shown. A threaded knob **39** is fitted on the threaded end **33** of piston rod **30**, and serves as the actuating member of the pump. This knob may be provided with any suitable indicia to identify the syrup or other fluid being delivered from a given pump.

The assembly of the novel pump herein is very simple, and involves the following sequence of steps:

(1) The piston **26** is placed on piston rod **30** by passing the rod up through the aperture or pump port **28** which is in communication with slot **29**;

(2) The slot **29** is engaged with the reduced bottom end **31** of the piston rod and the piston centered on the rod in contact with the cooperating supporting plate and valve member **27**, so that the valve ports or apertures **28** are closed;

(3) The piston rod **30** is passed up through aligned apertures **24** and **14** in the top of the pump barrel and cover, respectively, the piston being introduced into the barrel and prevented from side movement by its sliding fit in the barrel;

(4) The compression spring is fitted into its bottom cage member and the latter placed over the threaded upper end of the piston rod;

(5) The top telescoping cage member is threadedly engaged with the threaded end of the piston rod and the bottom cage member is forced into clamping engagement with the top of the cover **10**, while the piston is drawn up into the pump barrel by the piston rod;

(6) The pump capacity is calibrated by screwing the top cage member to the desired gauge mark **35*a***, and the knob **39** is screwed in place. The cover is then set in place on the container with the pump barrel submerged in the fluid in the container.

In operation, the piston is normally retracted to the top of the pump barrel by the biasing action of the compression spring on the piston rod. When the knob **39** is depressed, against the biasing action of the spring, the piston is forced down the predetermined or calibrated distance into the pump barrel. Simultaneously with its downward motion, the piston is unseated from its supporting plate and the ports **28** in the piston are uncovered, thereby permitting the fluid in the tank to flow into the pump chamber or barrel. When the pressure is released from knob **39**, the biasing spring forces the piston rod up with a uniform pressure, whereby the piston is again seated on its supporting plate, closing the valve ports or apertures **28**, and the superjacent fluid in the pump chamber is forced out of the pump through discharge pipe **17** and delivery nozzle **16** into the glass or other container being used.

When the pump is to be disassembled for cleaning, or for any other purpose, the reverse of the assembly sequence of steps is carried out. It is to be noted that all manipulative procedures are wholly manual, and do not require the use of tools. The parts exposed to fluid are easily washed and are self-draining, there being no undercuts or pockets adapted to retain any liquid. Additionally, and most importantly, the actuating spring is never in contact with the fluid in the container, and is shielded at all times during normal operation. The pump capacity can be varied instantly, and without dismantling the device, by simply screwing the upper cage member up or down on the threaded end of the pump rod, and, finally, the fabrication of the pump parts involves but simple press operations, with fixed assembly of the parts being secured by simple silver soldering, or any other approved method of forming a sanitary joint.

The pump parts are preferably made of stainless steel or Monel metal, although the invention comprehends the use of suitable plastics. The novel pumps herein are characterized by a high degree of efficiency and sanitary operation, as well as by low initial and maintenance costs.

While I have shown and described the preferred embodiment of my invention, I wish it to be understood that I do not confine myself to the precise details of construction herein set forth by way of illustration, as it is apparent that many changes and variations may be made therein, by those skilled in the art, without departing from the spirit of the invention or exceeding the scope of the appended claims.

I claim:

1. In a dispensing pump of the character described, including a cover, a subjacent, open-bottomed pump barrel, a dispensing tube, a piston rod reciprocably mounted in the pump barrel and the cover, and spring-biased piston rod actuation means on the top of the cover; the improvements comprising a valved piston reciprocably fitted into the pump barrel, said piston comprising a ported disk loosely mounted for limited vertical movement along the bottom portion of the piston rod, said disk having a radial slot to receive the bottom portion of the piston rod, said slot extending from the center of the piston to at least one of the ports in the piston, and a valve plate comprising a disk fixedly secured to the lower end of the piston rod, the ports in the piston being normally closed by said fixed disk.

2. Dispensing pump according to claim 1, characterized by the fact that the bottom portion of the piston rod is turned down immediately above the fixed disk to form a retaining shoulder, and the piston is freely reciprocable along the turned down section of the rod.

3. A fluid dispensing pump of the character described, comprising, in combination, a bottomed container; a cover detachably fitted on and over the container; a delivery spout integral with the cover and extending therebelow; an inverted measuring cup apertured to fixedly receive the bottom of the delivery spout; a stay rod

spacedly secured to both the cover and the cup and diametrically opposite the delivery spout; an axial aperture in the cup and an aligned aperture in the cover; a pump rod slidably fitted in the said aligned apertures and extending therethrough; a threaded spindle section on the upper end of the pump rod; a coiled compression spring fitted over the threaded spindle and having bearing engagement with the cover; a cage member threadedly fitted on the spindle over the spring in variable spring-biasing engagement therewith, whereby the pump rod is normally biased in fully retracted position; a knob threadedly secured on the free end of the spindle and manually depressible against the bias of the spring to force the pump rod down into the measuring cup; and a valved piston reciprocably fitted into the cup, said piston comprising a ported disk loosely mounted for limited vertical movement along the bottom portion of the pump rod, said disk having a radial slot to receive the bottom portion of the pump rod, said slot extending from the center of the piston to at least one of the ports in the piston, and a valved plate comprising a disk fixedly secured to the lower end of the pump rod, the ports in the piston being normally closed by said fixed disk, whereby when the knob-actuated pump rod is depressed, the

ported disk is unseated and the cup is filled with fluid, and on release of the knob, the pump rod is spring-biased into retracted position and the fluid is simultaneously discharged through the delivery spout.

4. Fluid dispensing pump according to claim 3, characterized by the fact that the pump rod is reduced in diameter immediately above the fixed disk and the valve plate is radially slotted to fit over said reduced rod section.

5. Fluid dispensing pump according to claim 4, characterized by the fact that the radial slot embouches into at least one of the perforations in the disk, and the perforations are larger than the pump rod, whereby when the pump is dismantled, the valve plate is laterally displaceable on the pump rod to be unseated and can be lifted off the rod.

References Cited in the file of this patent

UNITED STATES PATENTS

813,899	Keene	Feb. 27, 1906
968,491	Murphy	Aug. 23, 1910
2,587,241	Steele	Feb. 26, 1952