Aug. 18, 1953 V. MILITANO 2,649,103

FOLDING UMBRELLA

Filed Feb. 6, 1951 2 Sheets-Sheet 1

Fig. 1.

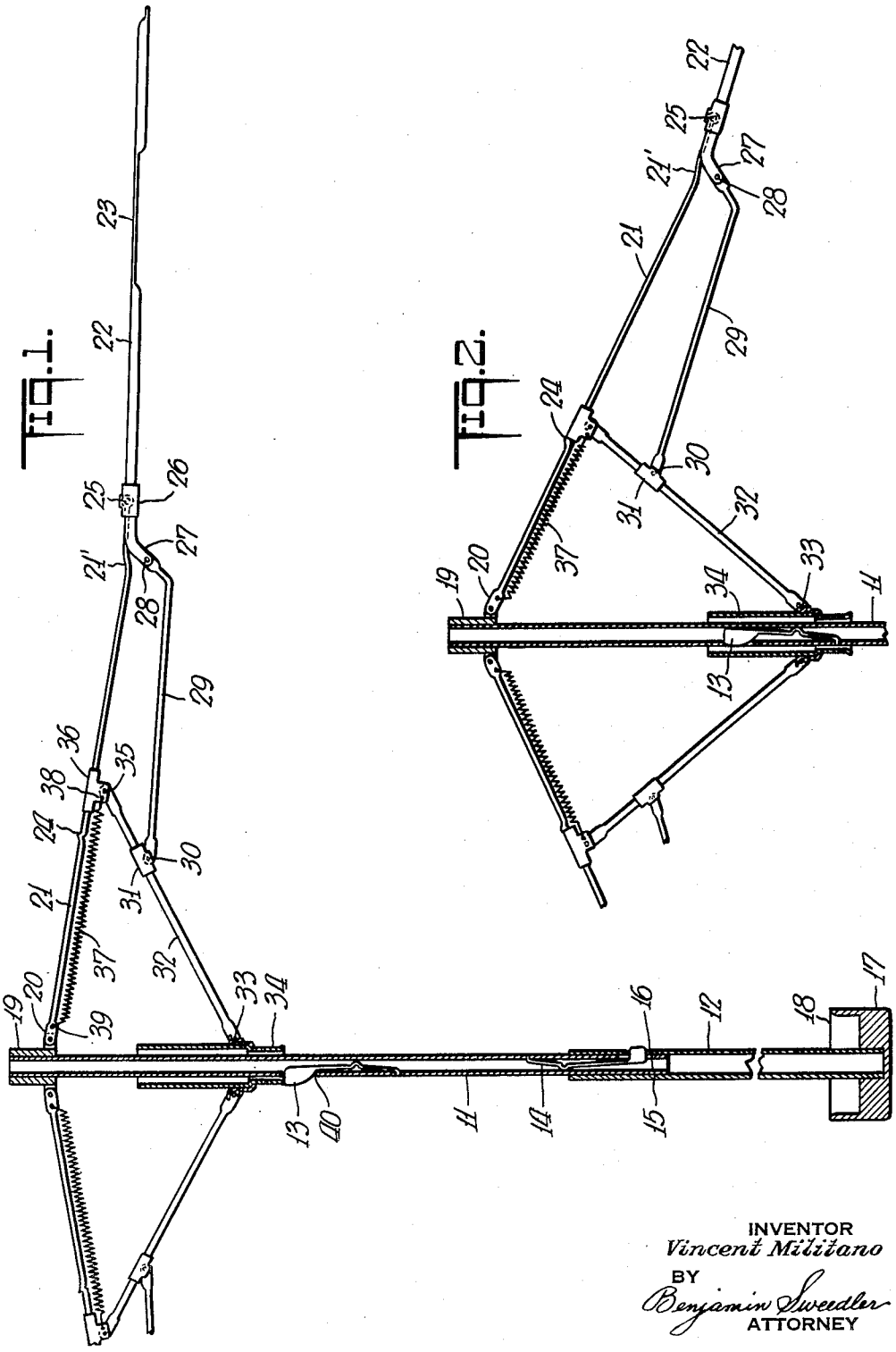


Fig. 2.




INVENTOR
*Vincent Militano*
BY
*Benjamin Sweedler*
ATTORNEY

Aug. 18, 1953 V. MILITANO 2,649,103

FOLDING UMBRELLA

Filed Feb. 6, 1951 2 Sheets-Sheet 2

FIG. 4.

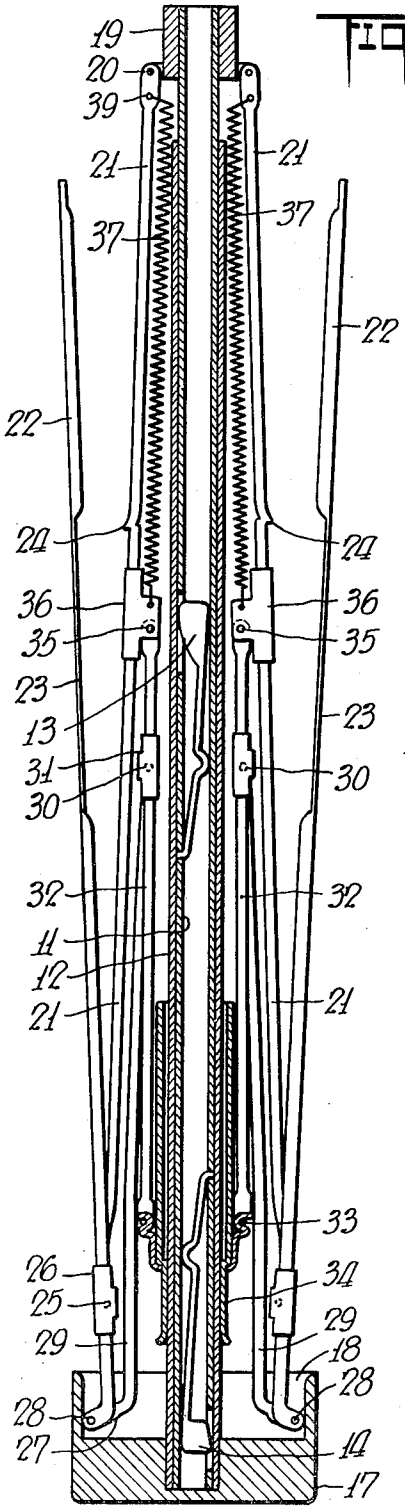


FIG. 3.

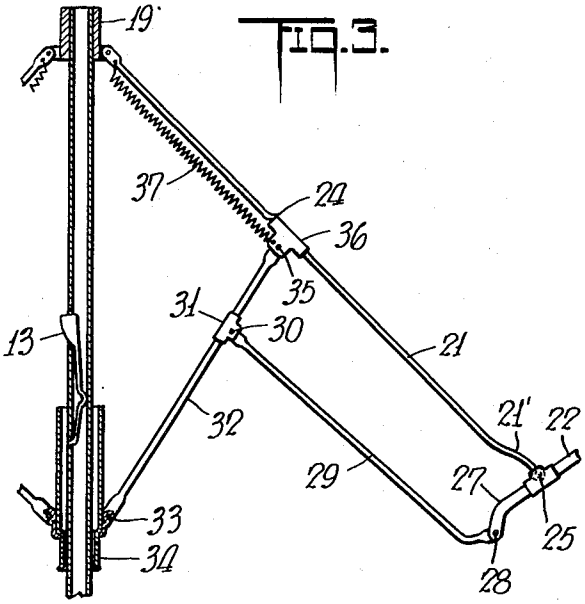


INVENTOR
Vincent Militano
BY
Benjamin Sweedler
ATTORNEY

Patented Aug. 18, 1953

2,649,103

# UNITED STATES PATENT OFFICE

2,649,103

## FOLDING UMBRELLA

Vincent Militano, Levittown, N. Y., assignor to The Finkel Umbrella Frame Company, Inc., New York, N. Y., a corporation of New York

Application February 6, 1951, Serial No. 209,586

4 Claims. (Cl. 135—25)

1

This invention relates to improvements in foldable or collapsible umbrellas which will be hereinafter referred to as folding umbrellas.

One common form of folding umbrella now available commercially can only be opened when held in an upright position so that under the influence of gravity the outer folded ribs tend to unfold. Opening of such umbrella is usually effected by thrusting the closed umbrella upwardly to create air pressure which aids in the gravity movement of the outer ribs to the unfolded position. Moreover, the opening of such umbrella invariably involves a compound movement of the runner.

It is an object of this invention to provide a folding umbrella that has a positive opening action, i. e., can readily and easily be opened in any position in which the umbrella may be disposed, and this without the need of imparting to the umbrella an upward thrust so that the air pressure thus created will aid in effecting opening of the umbrella.

Another object of this invention is to provide a folding umbrella which can be opened and closed in one motion of the runner from its umbrella closing to its umbrella opening position and vice versa.

Still another object is to provide a folding umbrella which involves relatively few parts and which is simple in design and construction so that it can be manufactured economically.

Other objects and advantages of this invention will be apparent from the following detailed description thereof.

In accordance with this invention, a folding umbrella is provided in which each inner rib has a sleeve slidably mounted thereon and held against a stop on the rib by a spring. Pivoted to each sleeve is one end of a stretcher, the other end of which is pivoted to the runner. Each inner rib has its extremity pivotally secured to an outer rib, thus supporting the outer rib for pivotal or folding movement relative to the inner rib. Each outer rib has an extension to which is pivotally secured one end of a link, the other end of which is fastened to the stretcher.

When the umbrella is in the completely closed position with the ends of the folded ribs disposed within a recess or opening in the handle of the umbrella, the slidable sleeves are spaced from their stops on the inner ribs, thus placing the springs under increased tension. Once the folded ribs are removed from the recess or opening in the handle, the springs function to move the sleeves against their stops. This effects movement of the outer ribs, irrespective of the position of the umbrella, through the stretchers and connecting links away from the umbrella stem. In this position of the outer ribs, the umbrella can be readily, easily and quickly opened by moving the runner to its raised position. Such movement of the runner is effected without interruption, i. e., in one motion.

2

Throughout the major portion of this movement, say during about 75% of the movement of the runner, the movable sleeves are maintained by their springs against their stops. During this portion of the movement of the runner the outer ribs are brought into alignment with the inner ribs, i. e., the outer ribs are unfolded. During the latter portion of the movement of the runner, e. g., during the last 25% of its movement to its locked position where it maintains the umbrella completely open, movement of the runner causes the movable sleeves to move away from their stops, thus again placing the springs under increased tension.

When it is desired to close the umbrella release of the spring clip stop for the runner causes the runner to drop. The tension exerted by the umbrella covering is augmented by that of the springs in effecting such downward movement of the runner. Accordingly, irrespective of the position in which the umbrella is held the slidable sleeves are moved to abut their stops. The stretchers and links connected to the outer ribs are thus positioned at a point where the outer ribs upon further downward movement of the runner are pivoted to their folded positions. Movement of the folded ribs to complete their folding and placement of the free ends of the folded ribs within the opening therefor in the handle effect movement of the slidable sleeves away from their stops and thus once more places the springs under increased tension.

In the accompanying drawings forming a part of this specification and showing for purposes of exemplification a preferred form of this invention without limiting the claimed invention to such illustrative instance,

Figure 1 is a fragmentary vertical section partly in elevation of an opened umbrella embodying this invention;

Figure 2 is a fragmentary vertical section of the umbrella showing the position of the stretchers, ribs, links, springs, slidable sleeves and runner just before the umbrella reaches its fully opened position shown in Figure 1;

Figure 3 is a fragmentary vertical section of the umbrella showing the position of the stretch-

ers, ribs, links, springs, slidable sleeves and runner when pivotal movement of the outer ribs relative to the inner ribs has just commenced; and

Figure 4 is a vertical section of the umbrella shown in its closed position.

The umbrella of this invention comprises a collapsible central rod involving an upper rod section 11 telescoping within a lower rod section 12. Upper rod section 11 is slidably movable within lower rod section 12 and is provided with an upper spring detent 13 and a lower spring detent 14. Spring detent 14, which may be of any conventional type, passes through an opening 15 near the base of rod section 11 and is adapted to extend through an opening 16 near the top of rod section 12 when openings 15 and 16 are aligned to lock the rod sections in their extended positions shown in Figure 1. Affixed to the base of rod section 12 is a handle 17 provided with an annular channel or opening 18 the function of which will be hereinafter described.

Secured to the upper end of rod section 11 is a tip or crown member 19 to which are pivotally attached the inner ends 20 of radiating folding rib structures for supporting the umbrella cover or top (not shown). This umbrella cover may be of any conventional type.

As the rib structures are all alike only one will be described in detail. Each rib structure comprises an inner rib 21 and an outer rib 22. Desirably the inner rib is of wire, such as steel wire, and the outer rib is of spring steel and may be formed with a flat flexible intermediate portion 23 to obtain the "Bombay" type of umbrella top spread. Inner rib 21 is provided with a stop 24 intermediate its ends, desirably spaced from the end 20 of the rib section approximately one-third of the length of the inner rib.

Outer rib 22 is pivoted to the inner rib 21 at 25. Desirably, this pivot is formed by providing the outer rib 22 with a sleeve or lap 26 to which the end of rib 21 is pivotally secured. Also the portion of rib 22 extending beyond lap 26 is U-shaped in cross section and is arranged to receive the end of wire rib 21, as shown in Figure 2. Each outer rib 22 is provided with a downwardly extending depending extremity 27 which is pivoted at 28 to one extremity of a link 29. The other extremity of this link is pivoted at 30 to a sleeve or lap 31 fixed to a stretcher 32. Each stretcher 32 has one end pivoted at 33 to a runner 34 slidably mounted on stem 11. The inside diameter of this runner is large enough to clear the outside diameter of rod section 12 permitting free sliding movement of the runner from the position shown in Figure 1 to that shown in Figure 4. The other end of each stretcher 32 is pivotally secured as at 35 to a slidable sleeve 36 disposed on the inner rib 21.

Preferably, but not necessarily, rib 21 near its end adjacent the pivot 25 is bent upwardly slightly as at 21'. This facilitates movement of rib 22 about the pivot 25 when the umbrella is closed, i. e., when movement is initiated for closure. When the umbrella is open, the tension of the umbrella cover is sufficient to straighten out bend 21' in the ribs; hence, the umbrella covering presents the proper curvature notwithstanding the presence of bend 21' in each rib.

A spring 37 has one end secured to the slidable sleeve 36 at 38 and the other end fastened at 39 to end 20 of the inner rib 21. This spring is



under tension so that it tends to move the sleeve 36 in a direction towards the stop 24 at all times. It will be understood that each rib structure comprises inner and outer ribs 21 and 22, a slidable sleeve 36 on the inner rib spring tensioned so that it tends to move towards a stop 24 on the inner rib, a stretcher 32 and a connecting link 29, the parts being arranged relatively to each other substantially as shown in the drawings. While a coil spring 37 is preferred, other tension means such as elastic bands, e. g., rubber bands, etc., may be employed. The term spring is used herein in a broad sense to include all equivalent constructions.

When the umbrella is in its fully opened position, shown in Figure 1, the spring detent or catch 13 which extends through opening 40 in tube section 11 engages the lower edge of runner 34 and maintains it in the position shown in Figure 1. In this position of runner 34 the sleeves 36 are spaced from stops 24, as shown in Figure 1, thus placing the springs 37 under increased tension.

When the umbrella is in the closed position shown in Figure 4, ends 27 of the outer ribs 22 are disposed in the annular channel 18 of handle 17. Thus, the handle functions to prevent accidental opening movement of the umbrella. In this position the sleeves 36 are also spaced away from the stops 24.

When it is desired to open the umbrella, handle 17 is grasped to move the tubular rod section 12 relative to 11 to extend the supporting rod of the umbrella to its full length. In this position the rod sections 11 and 12 are locked by the spring detent or latch 14, which passes through the aligned openings 15 and 16 in the two rod sections. Once the handle 17 is moved so that it no longer exerts any pressure on the ends 27 of the outer ribs 22, the ribs, stretchers and connecting links move outwardly away from the umbrella rod 11 and 12. Simultaneously the springs 37 move the slidable sleeves 36 on the inner ribs 21 to abut the stops 24. This movement causes the stretchers 32 to move about their pivots 33 exerting a thrust on the links 29 effecting pivotal movement of the outer rib sections 22 about their pivots 25 in an outward direction. The outer ribs are thus automatically placed in the position shown in Figure 3 where movement of the runner can effect opening of the umbrella readily. As the runner is moved upwardly from the position shown in Figure 3 to that shown in Figure 2 the stretchers 32 move upwardly about their pivots 35 which causes an upward movement of the links 29 effecting pivotal movement of the ribs 22 in a direction about their pivots 25 to open the outer ribs to the position shown in Figure 2. Further movement of the runner 34 to the position in which the spring catch 13 engages the lower extremity thereof, as shown in Figure 1, completes the opening movement causing the sleeves 36 to slide on the ribs 21 away from the stops 24. It will be understood that with the umbrella in the completely open position the cover exerts tension on the ends of the ribs 22, depressing these ends somewhat from the position shown in Figure 1.

When it is desired to close the umbrella the spring catch 13 is depressed within the tubular rod section 11 so that it no longer engages the lower edge of the runner 34. The tension under which springs 37 are maintained when the umbrella is in open position augments that of the cover to cause the runner 34 to descend. Simul-

taneously springs 37 effect pivotal movement of the stretchers 32 about their pivots to cause the slidable sleeves to abut stops 24. In this position closing movement of the ribs can readily be initiated by simply moving the runner 34 downwardly to the position shown in Figure 3. The rod sections 11 and 12 are collapsed, the outer ribs folded into close proximity to the inner ribs and the ends 27 of the outer ribs inserted in the opening 18 in handle 17. The movement of folding the outer ribs into close proximity to the inner ribs, through links 29 and stretchers 32 effects movement of sleeves 36 away from their stops 24 into the position shown in Figure 4.

It will be noted that the folding umbrella embodying this invention has a positive opening action, i. e., can readily be opened in any position in which the umbrella may be disposed by simply moving the runner. Further, a simple movement of the runner either upwardly or downwardly is all that is necessary to open and close the umbrella, respectively. Moreover, the umbrella involves relatively few parts which are simple in design and construction. Hence, the umbrella can be manufactured economically.

Since certain changes may be made in the umbrella and different embodiments of the invention can be made without departing from the scope of this invention, it is intended that all matter contained in the above description or shown in the accompanying drawings shall be interpreted as illustrative and not in a limiting sense.

What is claimed is:

1. A folding umbrella comprising, in combination; a rod; a crown member on one end of said rod; a runner slidably mounted on said rod; and radiating folding rib structures, each of said rib structures comprising an inner rib having one end pivotally secured to said crown member, an outer rib having the other end of said inner rib pivotally secured thereto, said outer rib having a depending portion extending beyond and below the pivot between said inner and outer ribs when the ribs are in alignment, a sleeve slidably mounted on said inner rib, a stretcher having one end pivoted to said runner and the other end pivoted to said slidable sleeve, a link connecting said stretcher with the said depending portion of said outer rib, and tension means tending to move said sleeve toward said crown member.

2. A folding umbrella comprising a rod; a crown member on said rod; a runner on said rod; and radiating folding rib structures pivotally attached to said crown member, each of said rib structures comprising an inner rib, an outer rib pivotally secured to said inner rib, a sleeve slidably mounted on said inner rib, a stop on said



inner rib, tension means tending to move said sleeve against said stop, a stretcher having one end pivoted to said runner and the other end pivoted to said slidable sleeve and a link connecting said stretcher with said outer rib.

3. In a folding umbrella comprising a rod, a crown member on said rod, a runner on said rod and radiating folding rib structures, each of which comprises an inner rib having one end pivotally secured to said crown member and having the other end pivotally secured to an outer rib, the improvement in said rib structure which comprises, a depending portion on said outer rib extending beyond and below the pivot between the inner and outer ribs when the ribs are in alignment, a sleeve slidably mounted on the inner rib, a stretcher having one end pivoted to the runner and the other end pivoted to the slidable sleeve, a link connecting the stretcher with the depending portion of the outer rib, a stop on the inner rib, and tension means to move the sleeve against the stop.

4. In a folding umbrella comprising telescopic upper and lower rod sections, means for maintaining the rod sections in extended position, a runner slidably mounted on the rod sections, means on the upper rod section for engaging the runner and maintaining it in umbrella open position, a crown member secured to the top of the upper rod section and folding rib structures radiating from the crown member, each of the rib structures comprising an inner rib having one end pivotally secured to the crown member and an outer rib pivotally secured to the inner rib, the improvement in said rib structure which comprises, a depending terminal portion on the outer rib, a sleeve slidably mounted on the inner rib, a stop member on the inner rib, a spring on the inner rib connected to said sleeve and normally tending to move the sleeve into abutment with the stop member, a stretcher having one end pivotally secured to the sleeve and the other end pivoted to the runner, and a connecting link having one end fixed to the stretcher and the other end pivotally secured to the depending terminal portion of the outer rib.

VINCENT MILITANO.

**References Cited** in the file of this patent

UNITED STATES PATENTS

| Number | Name | Date |
|---|---|---|
| 1,397,667 | Wilson | Nov. 22, 1921 |

FOREIGN PATENTS

| Number | Country | Date |
|---|---|---|
| 19,600 | Germany | Sept. 30, 1882 |
| 221,496 | Germany | Apr. 30, 1910 |