(19) Europäisches Patentamt
European Patent Office
Office européen des brevets

(11) EP 0 682 210 B1

(12) **EUROPEAN PATENT SPECIFICATION**

(45) Date of publication and mention of the grant of the patent:
29.10.1997 Bulletin 1997/44

(51) Int Cl.[6]: **F23N 5/16**, F23N 5/18

(21) Application number: **95103639.1**

(22) Date of filing: **14.03.1995**

(54) **Combustion control apparatus**

Verbrennungsregeleinrichtung

Dispositif de commande de combustion

(84) Designated Contracting States:
DE FR GB IT

(30) Priority: **18.03.1994 JP 49004/94**

(43) Date of publication of application:
15.11.1995 Bulletin 1995/46

(73) Proprietor: **YAMATAKE-HONEYWELL CO. LTD.**
Tokyo 150 (JP)

(72) Inventors:
- **Seki, Kazuo, c/o Yamatake-Honeywell Co., Ltd.**
Fujisawa-shi, Kanagawe 251 (JP)
- **Morita, Yasuji, c/o Yamatake-Honeywell Co., Ltd.**
Fujisawa-shi, Kanagawe 251 (JP)

(74) Representative: **Eisenführ, Speiser & Partner**
Martinistrasse 24
28195 Bremen (DE)

(56) References cited:
EP-A- 0 349 384 **WO-A-91/06809**
GB-A- 2 042 221

- **PATENT ABSTRACTS OF JAPAN vol. 014 no. 311 (M-0994) ,4 July 1990 & JP-A-02 103312 (NAKAYAMA STEEL WORKS LTD) 16 April 1990,**
- **PATENT ABSTRACTS OF JAPAN vol. 009 no. 057 (M-363) ,13 March 1985 & JP-A-59 191812 (NIPPON KOKAN) 31 October 1984,**

Note: Within nine months from the publication of the mention of the grant of the European patent, any person may give notice to the European Patent Office of opposition to the European patent granted. Notice of opposition shall be filed in a written reasoned statement. It shall not be deemed to have been filed until the opposition fee has been paid. (Art. 99(1) European Patent Convention).

EP 0 682 210 B1

Printed by Jouve, 75001 PARIS (FR)

Description

Field of the Invention

The present invention relates to a combustion control apparatus for preventing flame vibration which occurs in a burning appliance, for example, a gas combustion type hot water supply system.

Description of the Prior Art

Since before, gas combustion type hot water systems have been well known which mixes combustion air supplied from a fan motor, provided on an end of a duct and gas (city gas, propane gas), and burns them in order to obtain hot water through a heat exchanger mounted beside the burner, for example.

It is generally known that so-called flame vibration, which means expansion and contraction of flame from the burner, occurs in a hot water supply system which locally heats combustion air flowing within a duct. If flame vibration occurs, uncomfortable noise is generated. Depending on situations, a burner or a heat exchanger may be damaged. There is such a method in order to prevent flame vibration available as determines whether or not flame vibration occurs by detecting vibration of fire current flowing between the surface of a burner and a heat exchanger and controlling the condition of combustion depending on the vibration of the fire current.

However, although conventional combustion control apparatus is capable of sufficiently detecting flame vibration when flame vibration is small, if flame vibration increases, fire current is disturbed. Consequently, this conventional combustion control apparatus has such a problem that it cannot detect flame vibration accurately. If a large flame vibration is generated so that noise occurs suddenly after a small flame vibration continues for a short time, it is impossible to detect the frequency of flame vibration based on fire current. Thus, the conventional combustion control apparatus was not capable of controlling combustion depending on the amplitude of flame vibration and therefore was not capable of preventing flame vibration.

SUMMARY OF THE INVENTION

Accordingly, an object of the present invention is to solve the aforementioned problem and provide a combustion control apparatus capable of effectively preventing flame vibration by controlling the condition of combustion depending on the amplitude of flame vibration.

The combustion control apparatus of the present invention is provided with a detecting means for detecting the amount of flow of combustion air flowing through a duct, the detecting means being mounted near the node of pressure distribution within the duct, and is further provided with a control means for determining the amplitude of flame vibration according to the change of air flowing therethrough, controlling the amount of flowing air when flame vibration is small and controlling the amount of flowing fuel as well as the amount of flowing air when flame vibration increases.

Because the detecting means mounted near the node of pressure distribution within the duct in the combustion control apparatus of the present invention detects the amount of the combustion air flow, the combustion control apparatus is capable of detecting the amount of the air flow stably and further detecting even slight changes of the amount of the flow to achieve highly accurate detection of the changes of the amount of flowing air. Further, the control means determines the amplitude of flame vibration according to the changes of the air flow, controls the amount of the combustion air when flame vibration is small and further controls the amount of flowing fuel when flame vibration increases in order to effectively prevent flame vibration.

BRIEF DESCRIPTION OF THE DRAWINGS

Fig. 1 is a partial sectional view of the structure of an embodiment of the present invention.

Fig. 2 is a front view of a flow meter applied to the embodiment shown in Fig. 1.

Fig. 3 is a perspective view of a flow sensor in the flow meter shown in Fig. 2.

Fig. 4(a) is a partial sectional view of a hot water supply system for explaining the mounting positions of a gas burner and a flow sensor.

Fig. 4(b) is a characteristic view for showing the pressure distribution of combustion air in a duct.

Fig. 4(c) is a characteristic view for showing the flow speed distribution of combustion air in the duct.

DETAILED DESCRIPTION OF THE PREFERRED EMBODIMENTS

An embodiment of the present invention will be described with reference to drawings. Fig. 1 is a partial sectional view for showing the structure of an embodiment of the present invention. Referring to Fig. 1, reference numeral 1 denotes a duct having a fan motor 2 which is provided on an end of the duct 1. The fan motor 2 comprises a fan which rotates at a predetermined rotation speed. External air is sucked by the fan and fed into the duct 1. The air outlet of the fan motor 2 is provided with a dumper 3 for adjusting the amount of combustion air flowing into the duct 1. The dumper 3 is rotated around a shaft 5 by a driving unit 4. The degree of the opening of the damper 3 is adjusted so that the air fuel ratio (air: fuel) of a gas burner is approximately 1.2. The reason why the air fuel ratio is fixed to 1.2 is that combustion under this ratio is most excellent.

A gas burner 6 is provided in the downstream of the duct 1. The gas burner 6 is supplied with a predetermined amount of gas (city gas, propane gas) from out-

side the duct. When propane gas is used as fuel gas, the gas is supplied from a gas cylinder 7. A heat exchanger 8 is provided downward of the gas burner 6. The heat exchanger 8 comprises cooling pipes of copper and fins connecting them. Water supplied from an end of the cooling pipe passes through the cooling pipe and then is discharged from the other end. The other end of the duct 1 discharges combustion gas passing through the duct 1, as an exhaust port.

For example, a flow sensor 9a is mounted in the center of the fan motor 2 and a flow sensor 9b is mounted adjacent to the gas burner 6, upward of the gas burner 6. The flow sensors 9a, 9b detect the amount of combustion air flowing through the duct 1 and supply a flow signal FS corresponding to the amount of passing air to a control circuit 10. As the flow sensors 9a, 9b, for example, thermal type flow sensors are used. However, only one flow sensor 9 is depicted to facilitate understanding of the following description.

Fig. 2 is a front view showing the structure of the thermal type flow sensor. The thermal type flow sensor comprises two cylinders 21, 22 mounted in parallel to each other so that they are perpendicular to the direction of air flowing through the duct 1, a portion in which the ends of the cylinders protruding outside the duct 1 are connected to a through hole 25 of the sensor body 24 by means of tubes 26, 27 and a flow sensor portion 28 provided within the through hole 25.

Fig. 3 shows the structure of the flow sensor portion 28. Fig. 3 is a perspective view showing the flow sensor portion 28 of the thermal type flow sensor. As shown in Fig. 3, the flow sensor portion 28 has a diaphragm 32 less than 20 μm in thickness on a semiconductor chip 31 which is 1.7 mm square and further a micro flow sensor placed on the diaphragm, the micro flow sensor containing an exothermic resisting pattern and a heat sensitive resisting pattern.

When a predetermined amount of current is supplied to the micro flow sensor, the exothermic resisting pattern becomes to be exothermic. The resistance of the heat sensitive resisting pattern is set to a certain constant value. Combustion air flowing through the duct 1 enters one cylinder 21 through a hole 21a, passes through the tube 26, the through hole 25, and the tube 27, and finally goes out from a hole 22a of the other cylinder 22. At this time, heat on the semiconductor chip changes depending on the amount of air flowing over the micro flow sensor. Consequently, the resistance of the heat sensitive pattern changes. The change of the resistance is detected by the control circuit 10. Because the aforementioned flow sensor portion 28 is constructed with a very small structure, the flow sensor has a very high sensitivity and an excellent responsibility (several meters sec), so that it is always capable of measuring the amount of flow accurately. It is permissible to provide the internal surfaces of the cylinders 21, 22 of the micro flow sensor with minute unevenness in order to collect dust contained in combustion air. Or it is permissible to provide the internal surfaces of the cylinders 21, 22 of the micro flow sensor with a trap, a partition plate coated with adhesive or porous agent or a dust catching plate.

The control circuit 10 measures the change of the resistance of the heat sensitive resisting pattern. The change of the resistance of the heat sensitive resisting pattern corresponds to the change of the flow amount of combustion air. Thus, the change of the flow amount of combustion air is measured. When the change of the flow amount of combustion air exceeds a certain constant value (threshold), the control circuit 10 determines that flame vibration occurs and transmits control signals S1, S2. The control signal S1 is supplied to the driving unit 4 and the control signal S2 is supplied to a gas flow adjusting valve 11. The driving unit 4 drives the damper 3 according to the control signal S1 and adjusts the degree of the opening in order to control the flow amount of combustion air flowing through the duct 1. Or it is permissible to control the flow amount of combustion air flowing through the duct 1 by changing the rotation speed of the fan motor 2. On the other hand, the adjusting valve 11 controls the flow amount of gas supplied to the gas burner 6 according to the control signal S2.

Next, the mounting positions of the gas burner 6 and the flow sensors 9a, 9b will be described with reference to Figs. 4(a), 4(b), 4(c). Figs. 4(a), 4(b), 4(c) are figures for explaining the method for determining the mounting positions of the gas burner and the flow sensor. Fig. 4 (a) is a partial sectional view of the same hot water supply system as shown in Fig. 1. Fig. 4(b) is a characteristic diagram for showing the pressure distribution of combustion air in the duct, and Fig. 4(c) is a characteristic diagram for showing the flow speed distribution of combustion air within the duct. These characteristics are measured by means of a plurality of pressure sensors 41, 42, 43 (three pressures sensors are depicted in the present embodiment) provided in the upstream of the gas burner within the duct 1. The pressure distribution of combustion air is represented in the sinusoidal wave form as shown in Fig. 4(b). On the other hand, the flow speed distribution is represented in cosine wave form approximately 90° off with respect to the pressure distribution.

According to the invention, the flow sensors 9a, 9b are mounted in the vicinity of a position in which the amplitude of pressure is minimized or the amplitude of flow speed is maximized. Because the change of pressure is small at this position, it is possible to detect the amount of air flow stably and further it is possible to detect a minute change of air flow. Further, because flame vibration is maximum, it is possible to achieve a high precision detection. Whether or not flame vibration occurs is determined by the change of air flow detected by the flow sensors 9a, 9b, that is, a deflection of the amplitude of pressure or amplitude of flow speed.

Next, the operation of the aforementioned embodiment will be described. When the hot water supply system is operated, an almost constant amount of combus-

tion air supplied from the fan motor 2 is mixed with the predetermined amount of gas and then the mixture thereof is burned by means of the gas burner 6. In the heat exchanger 8, water entering therein is heated by flame of the gas burner 6 so that it is hot water and discharged outside. When no flame vibration occurs, there is little change in the amount of flow of combustion air detected by the flow sensors 9a, 9b. Thus, the damper 3 or the adjusting valve 11 is kept as it is.

On the other hand, if flame vibration occurs during combustion, the change of flow of combustion air due to flame vibration is detected by means of the flow sensors 9a, 9b. When the change of flow is small or when flame vibration is small, the control circuit 10 drives the driving unit 4 by the control signal S1 depending on the change of flow in order to adjust the degree of the opening of the damper 3 or the rotation speed of the fan. As a result, the air fuel ratio of the gas burner 6 is changed, so that the combustion condition changes, thereby suppressing flame vibration. If flame vibration increases to produce noise, the change of the flow amount thereof detected by the flow sensors 9a, 9b increases. In this case, namely, when flame vibration increases, the control circuit 10 outputs the control signal S2 corresponding to the change of the flow amount as well as the control signal S1. According to the control signal S2, the adjusting valve 11 is driven so as to adjust the amount of the flow of gas. As a result, the amount of the flow amount of gas is controlled by means of the adjusting valve as well as the degree of the opening of the dumper and the rotation speed of the fan. Consequently, the air fuel ratio of the gas burner 6 is changed further, so that the condition of combustion changes, thereby further suppressing flame vibration.

Although a burner using gas (city gas, propane gas) was described in the aforementioned embodiment, the present invention is not restricted to this case but can be applied to burners using other fuel such as kerosene, gas oil and the like.

As described above, according to the present invention, the combustion control apparatus is provided with a detecting means for detecting the amount of the flow of combustion air flowing through the duct, the detecting means being placed in the vicinity of the node of the pressure distribution within the duct and determines the amplitude of flame vibration according to the change of the flow amount. The combustion control apparatus comprises a control means for controlling the amount of fuel as well as controlling the amount of the flow of combustion air when flame vibration increases. Thus, this combustion control apparatus is capable of detecting a large flame vibration as well as a small flame vibration, and controlling the condition of combustion depending on the amplitude of flame vibration. Thus, the combustion control apparatus of the present invention is capable of preventing flame vibration very effectively.

Claims

1. A combustion control apparatus characterized by :

   a detecting means (9) for detecting the amount of combustion air flowing through a duct (1), said detecting means being mounted in the vicinity of a node of pressure distribution within said duct; and
   a control means (10) which determines the amplitude of flame vibration according to a change of the flow amount detected by means of said detecting means, controls the amount of the flow of said combustion air when flame vibration is small, and controls the amount of the flow of said combustion air as well as the amount of the flow of fuel when flame vibration increases.

2. A combustion control apparatus according to claim 1,

   wherein the detecting means comprises a thermal type flow sensor including two cylinders (21,22) mounted in parallel to each other so that they are perpendicular to the direction of air flowing through the duct, a portion in which the ends of the cylinders protruding outside said duct are connected to a through hole (25) of the sensor body (24) by means of tubes (26,27) and a flow sensor portion (28) provided within said through hole.

3. A combustion control apparatus according to claim 2,

   wherein the control means determines the amplitude of flame vibration according to a change of the resistance of heat sensitive pattern of the thermal type flow sensor.

Patentansprüche

1. Verbrennungs-Regelungsvorrichtung, gekennzeichnet durch:

   eine Erfassungseinrichtung (9) zum Erfassen der Verbrennungsluft-Menge, welche durch einen Kanal (1) strömt, wobei die Erfassungseinrichtung in der Nähe eines Knotens der Druckverteilung innerhalb des Kanals angebracht ist; und
   eine Regelungseinrichtung (10), welche die Amplitude der Flammenvibration entsprechend einer Änderung der Strömungsmenge bestimmt, welche durch die Erfassungseinrichtung erfaßt wird, die Strömungsmenge der Verbrennungsluft regelt, wenn die Flammenvibration klein ist, und die Strömungsmenge der Verbrennungsluft ebenso wie die Strömungsmenge des Brennstoffes regelt, wenn die Flammen-

vibration zunimmt.

2. Verbrennungs-Regelungsvorrichtung nach Anspruch 1,
bei welcher die Erfassungseinrichtung einen Thermo-Strömungssensor mit zwei Zylindern (21, 22) umfaßt, welche parallel zueinander derart angeordnet sind, daß sie senkrecht zu der Luftströmungsrichtung durch den Kanal verlaufen, wobei ein Teil, mit welchem die Enden der Zylinder aus dem Kanal vorstehen, durch ein Durchgangsloch (25) durch Röhren (26, 27) und einen Strömungssensorteil (28), der innerhalb des Durchgangsloches vorgesehen ist, mit dem Sensorkörper (24) verbunden ist.

3. Verbrennungs-Regelungsvorrichtung nach Anspruch 2,
bei welcher die Steuerungsvorrichtung die Amplitude der Flammenvibration entsprechend einer Änderung des Widerstandes eines wärmeempfindlichen Musters des Thermo-Strömungssensors bestimmt.

Revendications

1. Dispositif de réglage de combustion caractérisé par :

un moyen de détection (9) pour détecter la quantité d'air de combustion s'écoulant dans un conduit (1), ledit moyen de détection étant monté à proximité d'un noeud de répartition de pression à l'intérieur dudit conduit ; et
un moyen de réglage (10) qui détermine l'amplitude de l'oscillation d'une flamme en fonction d'une variation de la quantité détectée à l'aide dudit moyen de détection, et règle la quantité écoulée dudit air de combustion lorsque l'oscillation de la flamme est faible, et la quantité écoulée dudit air de combustion ainsi que la quantité écoulée de combustible lorsque l'oscillation de la flamme augmente.

2. Dispositif de réglage de combustion selon la revendication 1,
dans lequel le moyen de détection comporte un détecteur de débit du type thermique comprenant deux cylindres (21, 22) montés parallèlement l'un à l'autre de manière à être perpendiculaires au sens d'écoulement de l'air à travers le conduit, une partie dans laquelle les extrémités des cylindres qui se prolongent à l'extérieur dudit conduit sont reliées à un trou traversant (25) du corps (24) du détecteur à l'aide de tubes (26, 27), et une partie de détection de débit (28) prévue à l'intérieur dudit trou traversant.

3. Dispositif de réglage de combustion selon la revendication 2,
dans lequel le moyen de réglage détermine l'amplitude de l'oscillation de la flamme en fonction d'une variation de la résistance d'un motif thermosensible du détecteur de débit du type thermique.

FIG. 1

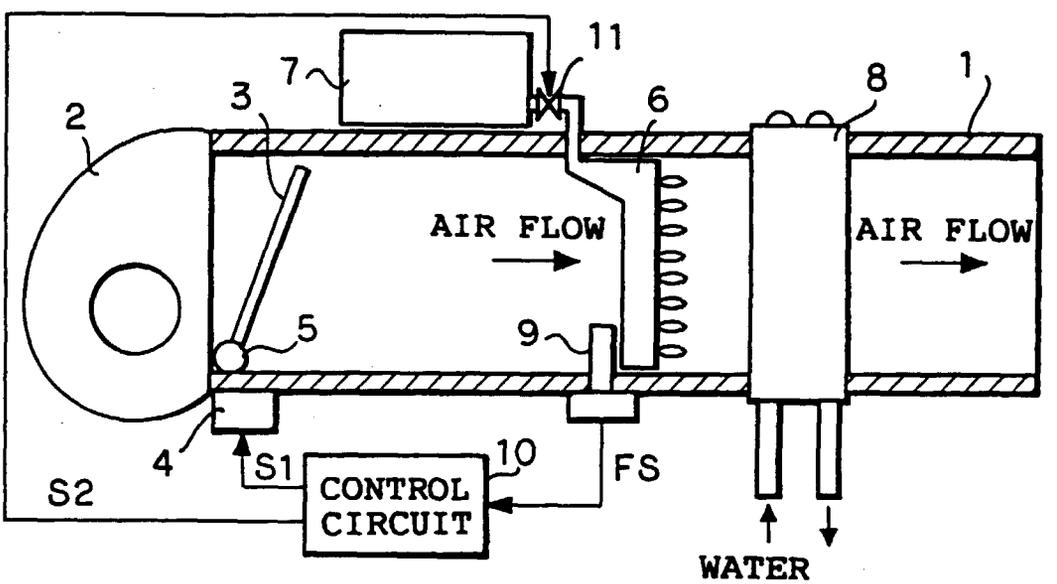
11
7
3
2
6
8
1
AIR FLOW
AIR FLOW
5
9
4
S1
10
FS
S2
CONTROL CIRCUIT
WATER

FIG. 2

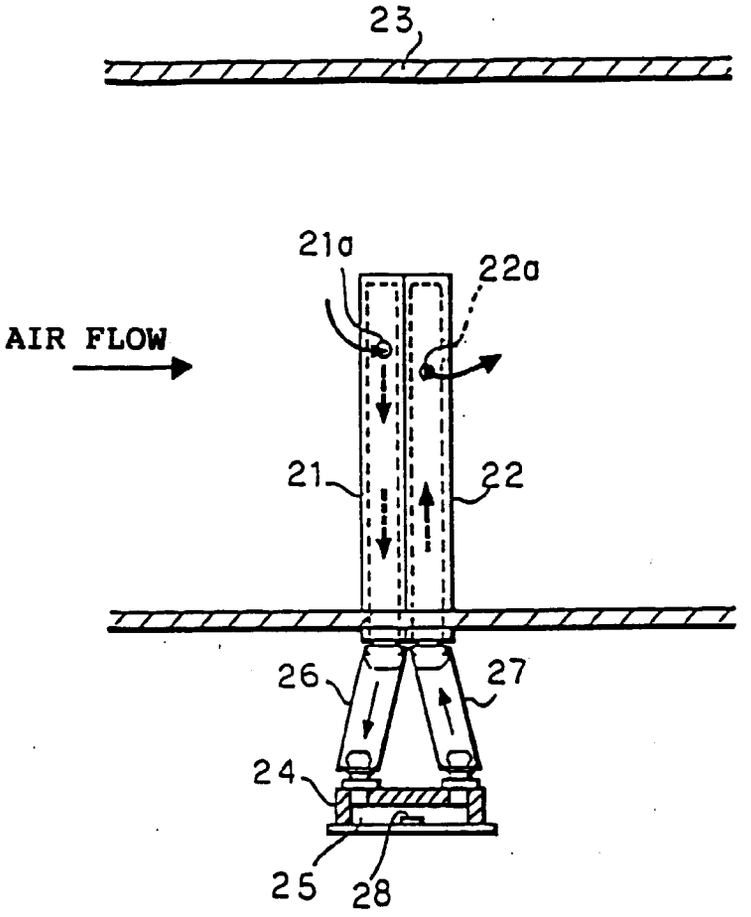

FIG. 3

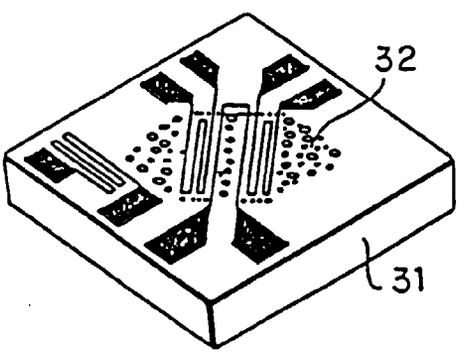

FIG. 4 (a)

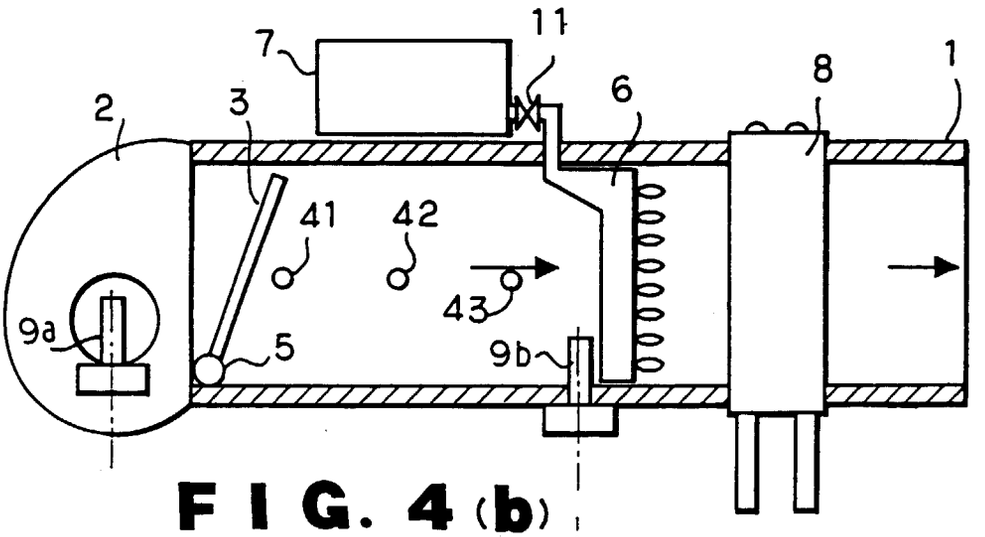

FIG. 4 (b)

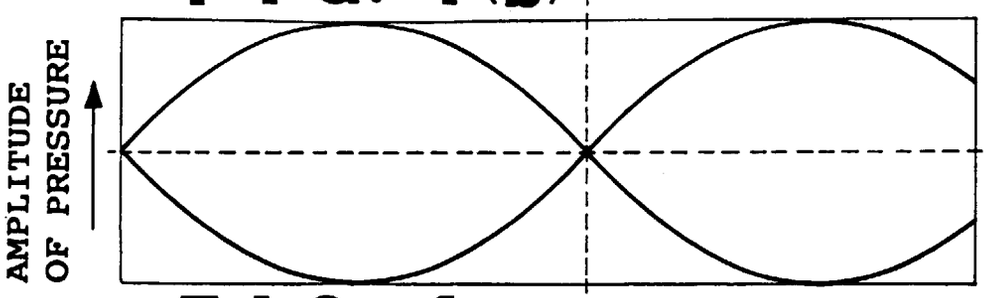

FIG. 4 (c)

