June 21, 1938. E. N. MILLAN 2,121,388

CONVEYER AND METHOD

Filed Sept. 17, 1937

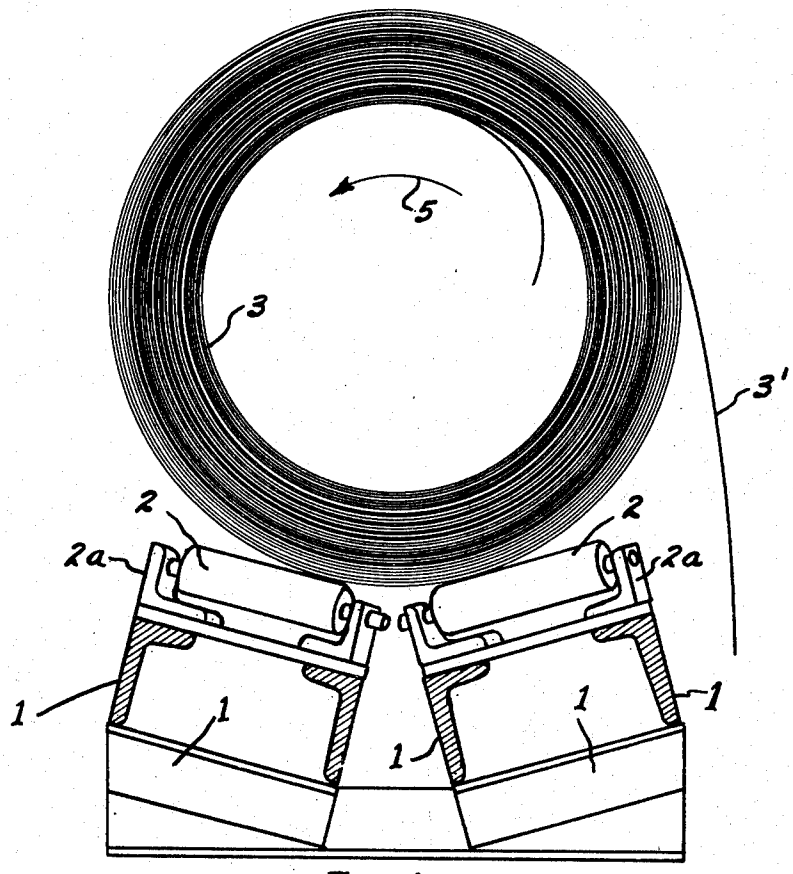

FIG. 1.

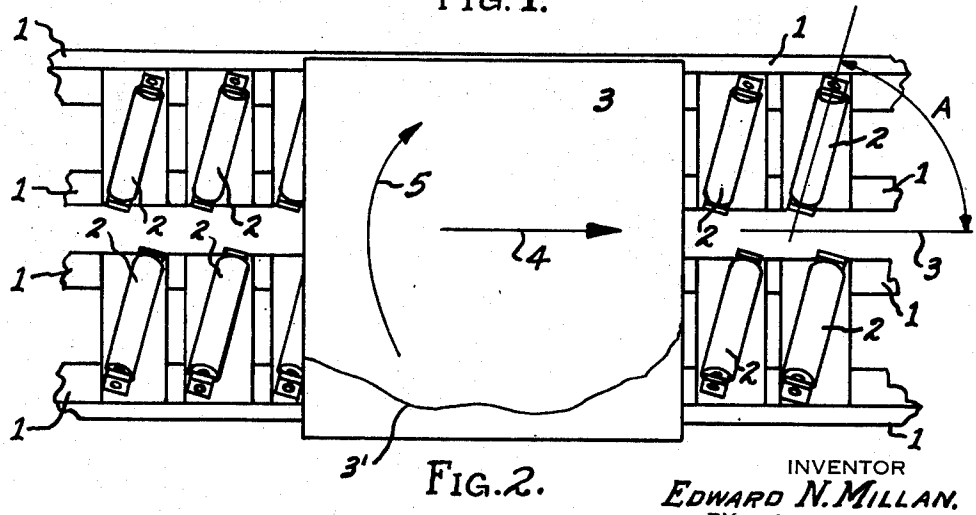

FIG. 2.

INVENTOR
EDWARD N. MILLAN.
BY Allen & Allen
ATTORNEYS.

Patented June 21, 1938

2,121,388

UNITED STATES PATENT OFFICE

2,121,388

CONVEYER AND METHOD

Edward N. Millan, Middletown, Ohio, assignor to The American Rolling Mill Company, Middletown, Ohio, a corporation of Ohio

Application September 17, 1937, Serial No. 164,375

8 Claims. (Cl. 193—35)

This invention relates to conveyers and methods of conveying, and more particularly to the conveying of coils of sheet metal such as are produced by the modern continuous mill.

At various stages in the manufacture of sheet metal by the continuous method, the metal is coiled and transferred from one place to another in coil form. It may later be decoiled for the purpose of galvanizing or the like, and may subsequently again be coiled. The particular processes carried out upon such coils are immaterial so far as this invention is concerned, and this invention deals only with the problem of conveying such coils from one place to another between any of the various operations performed on the metal.

It has been conventional practice to convey such coils of metal from one place to another by placing them upon a conveyer of the roller type, in which there are usually two flights of conveyer rolls, the flights being disposed at an angle to each other to form a trough-like structure. The coils are placed on such a conveyer with the axes of the coils parallel to the center line of the conveyer. Such conveyers are sometimes of the gravity type although in some cases the conveyer rolls are driven.

There has been a difficulty in connection with the conveying of coils in the manner above described in that the loose end of the coil of metal would overhang the conveyer support, and would become fouled therewith. Furthermore the overhanging loose end of the coil has in the past, caused considerable trouble when the coil was wired or banded and when the coil was transferred to and from the conveyer.

Another difficulty in connection with the conveying of hot coils directly from the hot strip mill on the conventional conveyers, is that the coils tend to flatten or go out of round causing considerable trouble when the coil is further processed. With my invention the rotation of the coil in its travel eliminates the above difficulty and delivers the coil in prime condition.

With the above difficulties in mind, it is an object of my invention to provide a conveyer of the general type outlined above for conveying such coils of metal, which will obviate the above pointed out difficulties.

Another object of my invention is to provide a conveyer which will impart to the coil being conveyed thereon, a rotational movement in the direction of winding of the coil, so as to cause the windings of the coil to become tightened and to continually raise the overhanging tail end of the coil to prevent it from overhanging the conveyer.

These and other objects of my invention which will be pointed out hereinafter, or which will be apparent to one skilled in the art upon reading the specifications, I accomplish by that certain construction and arrangement of parts, and by that series of method steps of which I shall now describe in exemplary embodiment.

Reference is made to the drawing forming a part hereof in which

Figure 1 is a transverse sectional view of a conveyer according to my invention showing a coil thereon.

Fig. 2 is a plan view of a conveyer according to my invention showing a coil thereon.

Briefly in the practice of my invention I provide a conveyer structure indicated generally at 1, which may comprise any desired conventional structure or structural shapes. As shown the conveyer structure provides for two flights of conveyer rolls, which flights are tilted at a slight angle to form a trough-like structure as best seen in Fig. 1. The conveyer rolls 2 are mounted upon brackets 2*a* in any conventional manner, and it is to be understood that the rolls 2 may be driven or that the entire conveyer structure may be slanted to provide for gravity conveying.

As best seen in Fig. 2, the individual rolls 2 of the respective flights are disposed at an angle to the center line of the conveyer which is less than a right angle, and it should be noted that the angle of the rolls in the two flights is the same and is in the same sense.

It will now be clear that when a coil 3 is placed upon the conveyer as shown in the drawing, the coil will move, either by virtue of the fact that the rolls are driven, or if the conveyer is slanted, by gravity, in the direction indicated by the arrow 4 in Fig. 2. At the same time by virtue of the fact that the rolls are angularly disposed, the coil will be given a rotational movement in the direction of the arrow 5 in the figures, whereby the overhanging tail end of the coil indicated at 3' will be raised up and the various wraps of the coil will be tightened.

The angle to the center line of the conveyer at which the rolls are disposed, is indicated in Fig. 2 at A. It will be understood that the speed of the rotational movement of the coil 3 may be varied by the magnitude of the angle A, although any angle less than a right angle will cause a rotational movement. Without in any

way limiting myself, I prefer that the angle A be between 60 and 85°.

It will thus be seen that I have provided an extremely simple method of avoiding the objections referred to hereinabove, and that the structure of my conveyer is such that existing conveyers may be readily modified to perform the useful operation disclosed herein.

It is to be understood that modifications may be made in my preferred embodiment without departing from the spirit of my invention, and that I do not intend to limit myself otherwise than as pointed out in the claims which follow.

Having now fully described my invention, what I claim as new and desire to secure by Letters Patent is:

1. A conveyer comprising two flights of conveyer rolls, said flights being disposed at an angle to each other to form a trough-like structure, and the rolls of each flight being disposed at an angle to the center line of the conveyer which is less than a right angle.

2. A conveyer comprising two flights of conveyer rolls, said flights being disposed at an angle to each other to form a trough-like structure, and the rolls of each flight being disposed at an engle to the center line of the conveyer which is less than a right angle, the sense of the angularity of the rolls of said flights being the same.

3. A conveyer comprising two flights of conveyer rolls, said flights being disposed at an angle to each other to form a trough-like structure, and the rolls of each flight being disposed at an angle of from 60° to 85° with respect to the center line of the conveyer.

4. A conveyer comprising two flights of conveyer rolls, said flights being disposed at an angle to each other to form a trough-like structure, and the rolls of each flight being disposed at an angle of from 60° to 85° with respect to the center line of the conveyer, the sense of the angularity of the rolls of said flights being the same.

5. That method of conveying coils of sheet metal or the like, which includes the steps of imparting to the coils a linear movement parallel to the axes thereof, and at the same time imparting thereto a rotational movement in the direction of winding thereof.

6. A gravity conveyer comprising two flights of conveyer rolls, said flights being disposed at an angle to each other to form a trough-like structure, and the rolls of each flight being disposed at an angle to the center line of the conveyer which is less than a right angle.

7. A gravity conveyer comprising two flights of conveyer rolls, said flights being disposed at an angle to each other to form a trough-like structure, and the rolls of each flight being disposed at an angle to the center line of the conveyer which is less than a right angle, the sense of the angularity of the rolls of said flights being the same.

8. A gravity conveyer comprising two flights of conveyer rolls, said flights being disposed at an angle to each other to form a trough-like structure, and the rolls of each flight being disposed at an angle of from 60° to 85° with respect to the center line of the conveyer.

EDWARD N. MILLAN.