Dec. 15, 1964 W. A. FERRARI ETAL 3,161,305

REFUSE VEHICLE WITH LOAD COMPACTING AND UNLOADING MECHANISM

Filed Jan. 9, 1962 3 Sheets-Sheet 1

Fig. 1

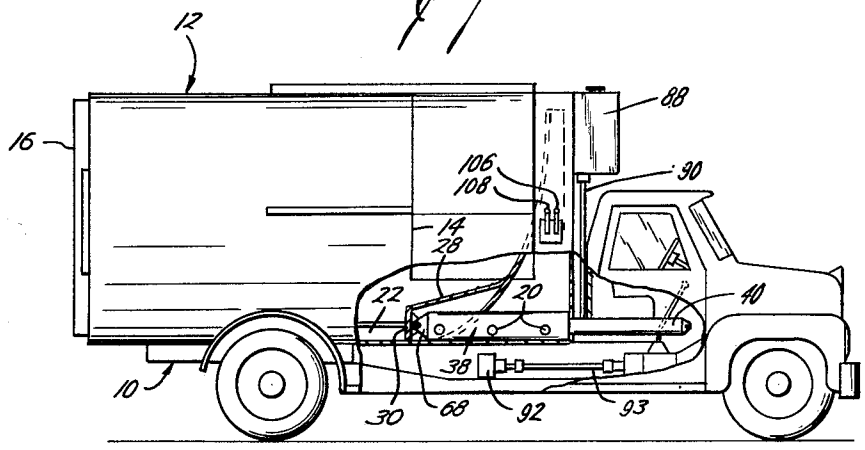

Fig. 2

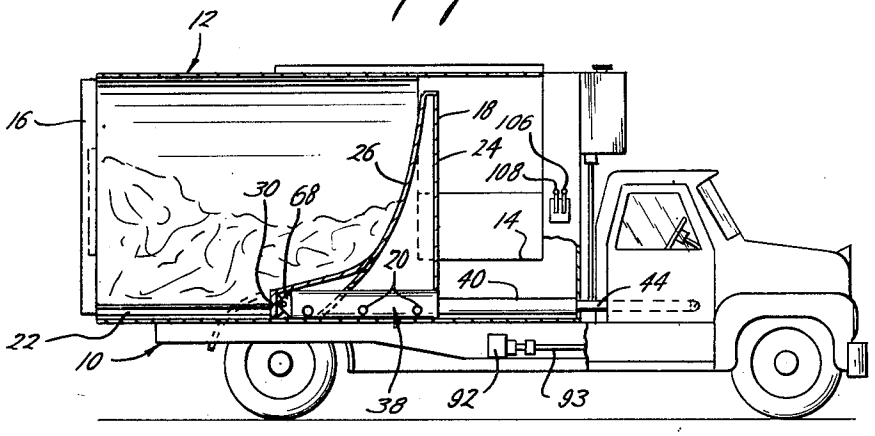

William A. Ferrari
Orin M. Anderson
Francis H. Dean
INVENTORS

BY Charles E. Lightfoot
ATTORNEY

Dec. 15, 1964 W. A. FERRARI ETAL 3,161,305

REFUSE VEHICLE WITH LOAD COMPACTING AND UNLOADING MECHANISM

Filed Jan. 9, 1962 3 Sheets-Sheet 2

Fig. 3

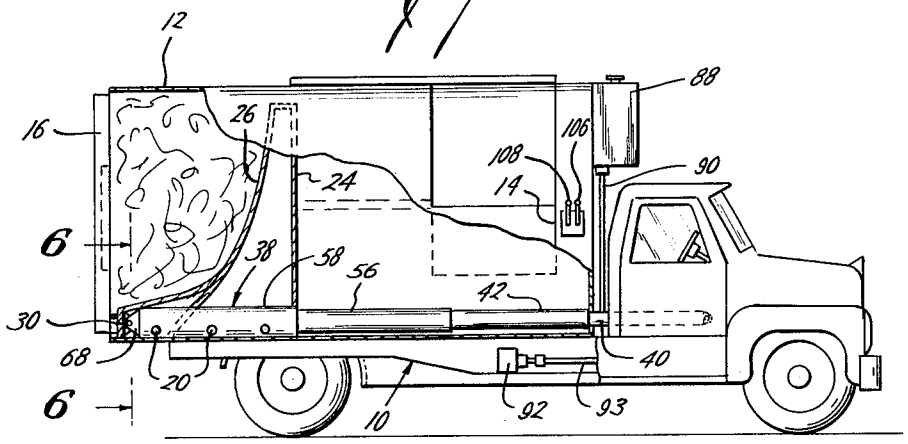

Fig. 4

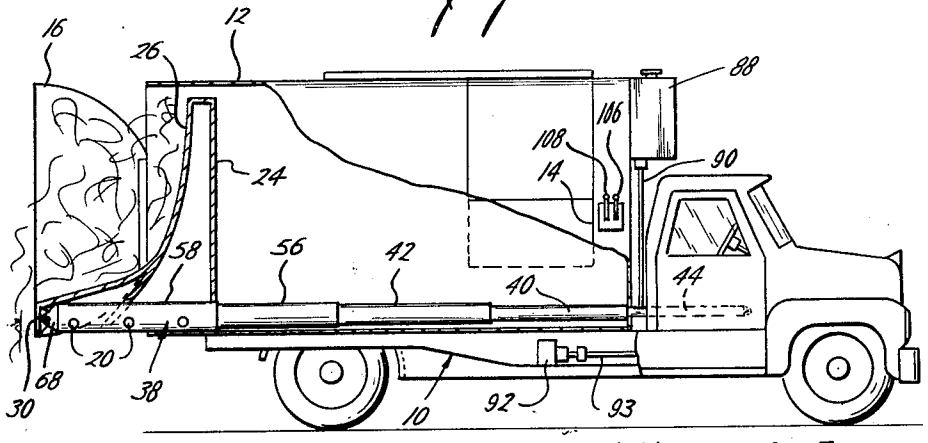

William A. Ferrari
Orin M. Anderson
Francis H. Dean
INVENTORS

BY Charles E. Lightfoot
ATTORNEY

Dec. 15, 1964 W. A. FERRARI ETAL 3,161,305

REFUSE VEHICLE WITH LOAD COMPACTING AND UNLOADING MECHANISM

Filed Jan. 9, 1962 3 Sheets-Sheet 3

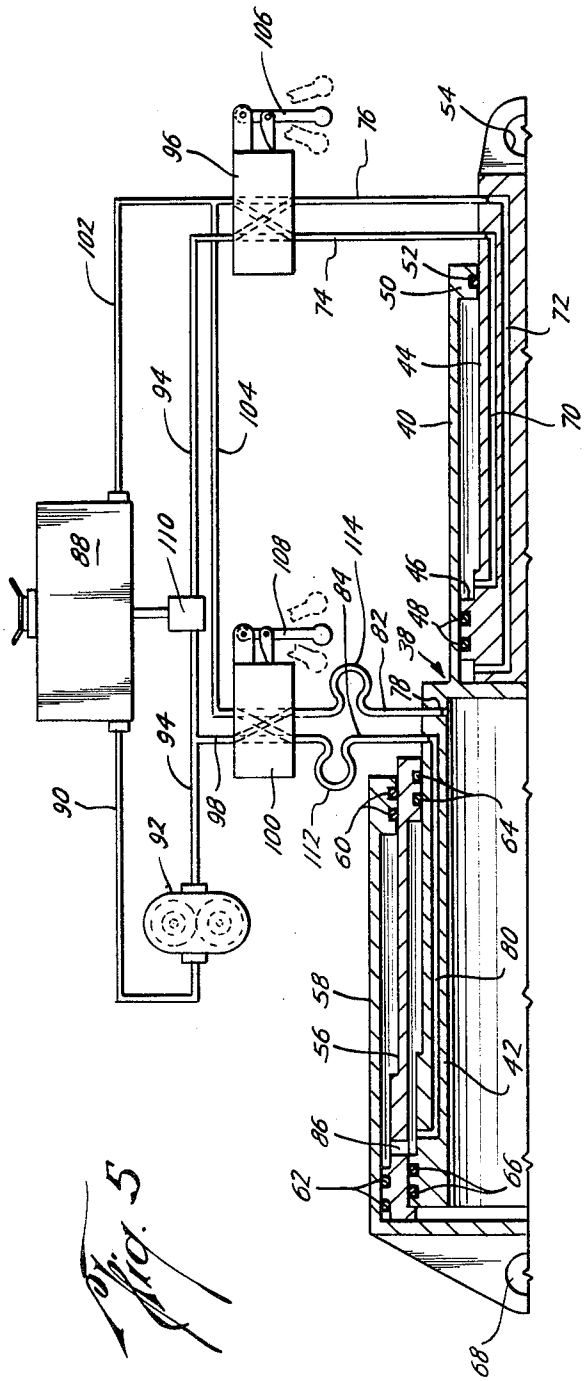

Fig. 5

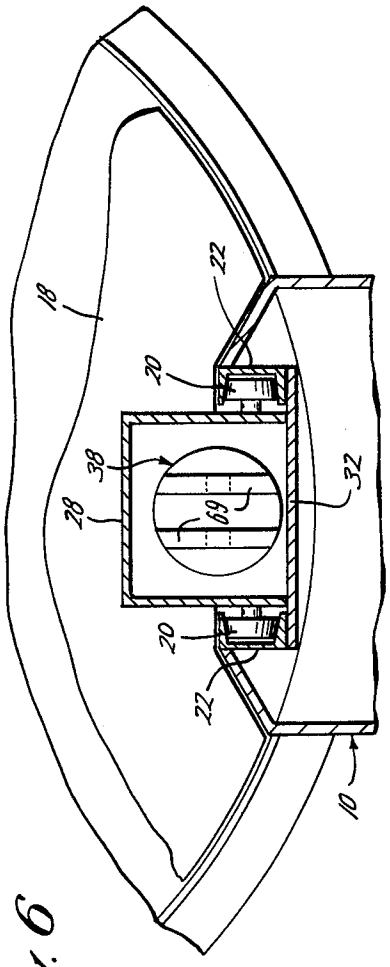

Fig. 6

William A. Ferrari
Orin M. Anderson
Francis H. Dean
INVENTORS

BY Charles E. Lightfoot
ATTORNEY

United States Patent Office 3,161,305 Patented Dec. 15, 1964

3,161,305

REFUSE VEHICLE WITH LOAD COMPACTING AND UNLOADING MECHANISM

William A. Ferrari and Orin M. Anderson, both of 1123 SE. Military Drive, San Antonio 14, Tex., and Francis H. Dean, Suite 8, Meyerland Plaza Mall, Houston 35, Tex.

Filed Jan. 9, 1962, Ser. No. 165,119
7 Claims. (Cl. 214—82)

This invention relates to the handling of refuse and similar bulk materials, and more particularly to a refuse collecting and transporting truck which is provided with mechanism for compressing the refuse therein during the loading of the vehicle and for ejecting such material from the vehicle to unload the same.

The invention has for an important object the provision of a refuse truck of relatively large capacity, which is easily loaded, in which the material may be compressed in successive increments as the same is loaded, and from which the material may be quickly and completely discharged on unloading, without tilting the body.

Another object of the invention is to provide a refuse vehicle of the type having a longitudinally movable compression member or packer plate therein and hydraulically operable mechanism of improved construction for moving the plate to compress the material to increase the amount of material which may be loaded into the vehicle and to discharge the material when the vehicle is to be unloaded.

A further object of the invention is the provision in a refuse handling vehicle of the type referred to of hydraulically operated packer mechanism which is of compact construction, and by which all of the force exerted by the hydraulic mechanism is applied in the direction of compaction of the refuse in the vehicle.

Another object of the invention is to provide a refuse vehicle of the kind mentioned having hydraulically operated refuse compacting and unloading mechanism in which compacting movement of the packer blade is limited during loading of the vehicle, to prevent the blade from being moved into contact with the unloading doors of the vehicle at the beginning of the loading operation, but wherein the packer blade may be moved rearwardly to a position extending somewhat beyond the rear end of the body to assure complete discharging of the refuse during unloading of the vehicle.

A further object of the invention is the provision in a refuse vehicle of the compression type of hydraulically operated packer mechanism by which a relatively small force may be initially applied to loose refuse placed in the vehicle to quickly move the same toward the rear of the body, and by which a large compressive force may then be applied to strongly compact the refuse.

The above and other important objects and advantages of the invention may best be understood from the following detailed description, constituting a specification of the same, when considered in conjunction with the annexed drawings, wherein:

FIGURE 1 is a side elevational view, partly broken away, and partly in cross-section, illustrating a preferred embodiment of the invention and showing the refuse compacting mechanism in its fully retracted position;

FIGURE 2 is a view similar to that of FIGURE 1 showing the refuse compacting mechanism at the end of an initial refuse loading movement;

FIGURE 3 is a view similar to that of FIGURE 1, showing the refuse compacting mechanism at the end of a refuse compacting movement;

FIGURE 4 is a view similar to that of FIGURE 1, showing the packer blade and hydraulic mechanism in its fully extended position at the end of the unloading movement of the mechanism;

FIGURE 5 is a fragmentary view, partly in cross-section on an enlarged scale and partly diagrammatic, showing the hydraulic packer operating mechanism of the invention; and

FIGURE 6 is a fragmentary, transverse cross-sectional view, on a greatly enlarged scale, taken along the line 6—6 of FIGURE 3, looking in the direction indicated by the arrows.

Referring now to the drawings in greater detail, the refuse vehicle of the invention comprises a body mounted on a truck of conventional construction, having an underframe including a central, longitudinal body supporting beam 10, which in the present illustration is of downwardly opening channel or generally box-shape in cross-section.

The refuse body 12 of the vehicle is preferably of generally cylindrical or drum-like shape, mounted on the chassis in any convenient manner as by welding, the axis of the body extending longitudinally of the vehicle. The body is provided with side openings, such as that shown at 14, through which refuse may be loaded into the body near the forward end of the body, and which may be provided with sliding doors of usual construction.

The body is also provided at its rear end with the usual swinging doors 16, against which the refuse is compacted when the body is loaded and which may be opened to allow the refuse to be discharged rearwardly from the body. Within the body, an upright compression member or packer blade 18 is movably positioned for longitudinal movement in the body, which member is mounted on longitudinally spaced pairs of rollers 20 positioned to roll along a longitudinal trackway extending from end to end of the body formed of spaced apart, parallel channel members 22 located inwardly of the body and suitably supported on the beam 10, as best seen in FIGURE 6.

The packer blade 18 is of hollow construction having a vertically disposed rear wall 24 and a downwardly and rearwardly curving front wall 26, which is formed at its lower portion with a rearward hood-like extension 28, closed at its rear end by a vertical wall portion 30.

The lower flanges of the channel members 22 of the trackway are connected by a bottom plate 32, as shown in FIGURE 6, to close the bottom of the body.

The compression member or packer blade is moved along the trackway by the hydraulically operated mechanism of the invention which includes an elongated, cylindrically shaped body, generally designated 38, having at its forward end a pressure cylinder 40 of smaller diameter and at its rear end an inner pressure cylinder 42 of somewhat larger diameter. A stationary plunger 44 is slidably extended into the forward cylinder 40, through the forward end thereof, which plunger is provided at its rear end with an annular enlargement 46, formed with annular grooves for the reception of suitable packing means, such as the O-rings 48, to form a fluid tight seal between the plunger and cylinder. Similarly, the outer end of the cylinder 40 may be provided with an internally thickened portion 50 which is internally grooved to receive suitable packing means, such as the O-ring 52, to form a fluid tight seal between the cylinder and plunger.

The plunger 44 is provided at its outer end with an eye 54 by which the outer end of the plunger may be anchored to the body, the plunger being positioned forwardly of the packer blade 18 when the packer blade is at the forward limit of its movement in the body.

One or more outer cylinders, such as those indicated at 56 and 58 are telescopingly arranged about the larger cylinder 42 for longitudinal sliding movement relative thereto and relative to each other, as best seen in FIGURE 5. Suitable means, such as the packing elements

60, positioned in internal grooves provided therefor, are carried by the outermost cylinder to form a fluid tight seal between the same and the cylinder 56. Similar packing means 62 and 64 are carried by the cylinder 56 in position to form fluid tight seals between the cylinder 56 and the outer cylinder 58 and inner cylinder 42, and the inner cylinder 42 may also be provided with seal forming elements 66, positioned to form a fluid tight seal between the inner cylinder and the cylinder 56. At its outer end, the outer cylinder 58 is provided with an eye 68 by which the outermost cylinder is anchored to perforated internal lugs 69 formed on the inner face of the end wall 30 of the hood-like extension 28 of the packer blade 18, the outer cylinder 58 being located inwardly of the hollow packer blade.

The plunger 44 is provided with passageways 70 and 72, which are connected at their outer ends in communication with pressure fluid flow lines 74 and 76 respectively, the linner end of the passageway 70 opening into the cylinder 40 at one side of the external enlargement 46 of the plunger, while the inner end of the passageway 72 opens into the cylinder 40 at the other side of the enlargement 46. The inner cylinder 42 is provided with a passageway 78, leading to the interior thereof, with a passageway 80, which is in communication at its inner end with the interior of the cylinder 56. The passageways 78 and 80 are also connected in communication with pressure fluid flow lines 82 and 84, respectively. A fluid passageway 86 is also provided in the wall of the cylinder 56, which is in communication with the interior of the cylinder 56 and with the interior of the cylinder 58.

The flow lines 74 and 76 are connected through a valve 96 to a reservoir 88 for hydraulic fluid, which is preferably located at an elevation on the forward end of the body 12 and from which a supply line 90 leads to a pressure fluid pump 92, suitably driven from the motor of the vehicle as by means of power take-off mechanism including drive shaft 93, and by which fluid under pressure may be supplied to the cylinder 40 through a line 94 under the control of a four-way valve 96, and to the cylinders 42, 56 and 58 through a line 98 under the control of a four-way valve 100. Return lines 102 and 104 are also provided leading from the four-way valves 96 and 100, respectively, to the reservoir 88 through which fluid may flow from the cylinder 40, cylinder 42 or cylinders 56 and 58 back to the reservoir. The four-way valve 96 is provided with an operating lever 106 and the valve 100 is provided with a similar operating lever 108, which levers are conveniently located on the side of the vehicle body for convenient use by an operator standing on the ground. A relief valve 110 is also provided in the line 94, through which fluid under pressure may return to the reservoir 88 when the pressure of fluid flowing from the pump 92 exceeds a predetermined pressure.

Flexible hoses, or the like, indicated diagrammatically at 112 and 114 are provided in the flow lines 82 and 84, to allow the cylinder body 38 to move longitudinally with the packer blade during the refuse handling operation.

In the operation of the vehicle, the control levers of the four-way valves 96 and 100 will initially be positioned in neutral positions, as shown in FIGURE 5, so that fluid does not flow through the valves. In this condition of the apparatus, the packer blade will be in the position shown in FIGURE 1, the hydraulic cylinder mechanism being in its retracted condition, as shown in FIGURE 5, with the plunger 44 in its innermost position in the cylinder 40 and the cylinders 56 and 58 in their fully retracted positions on the cylinder 42. The pump 92 will also be in operation during the loading of the vehicle, the fluid being circulated by the pump through the supply line 90 and the pump discharge line 94 through the relief valve 110 back to the reservoir.

With the apparatus in this condition, refuse may be loaded into the body through the side openings 14 to load loose refuse in the body rearwardly of the packer blade and when the loose refuse has accumulated substantially up to the bottom of the side openings, the valve lever 106 is moved to the left from the position illustrated in FIGURE 5 to connect the flow line 76 with the pump discharge line 94, and the flow line 74 with the return line 102, whereupon fluid under pressure from the pump 92 will be supplied to the cylinder 40 inwardly of the enlargement 46 of the plunger 54 to move the cylinder to the left from the position illustrated in FIGURE 5, while fluid in the cylinder 40 outwardly of the enlargement 46 may flow back through the line 74 and return line 102 into the reservoir 88. Such movement of the cylinder 40 results in rearward movement of the packer blade from the position of FIGURE 1, to that illustrated in FIGURE 2, to move the accumulated refuse toward the rear of the body, thus clearing the openings 14. When the packer blade reaches the position of FIGURE 2, the valve lever 106 is moved to the right to connect the flow line 74 in communication with the pump discharge line 94 and the line 76 in communication with the return line 102, whereupon fluid under pressure from the pump will be supplied to the cylinder 40 outwardly of the enlargement 46 of the plunger 54, while fluid in the cylinder inwardly of the enlargement 46 may flow back through the line 76 to the reservoir, thus returning the cylinder 40 to its retracted position on the plunger and returning the packer blade from the position in FIGURE 2 back to the fully retracted position of FIGURE 1 to place the apparatus in condition for the loading of further refuse into the body.

By repeating the above described operations, the portion of the body rearwardly of the openings 14 may be substantially filled with loosely packed refuse, and when this has been accomplished, the valve lever 108 may be moved to the right from the position illustrated in FIGURE 5 to connect the flow line 82 with the discharge line 94 of the pump, and the flow line 84 with the return line 102, whereupon the cylinders 56 and 58 will be extended rearwardly to strongly compact the refuse against the rear door 16 of the body to provide additional space for the introduction of further refuse into the body. It will be apparent that because of the larger cross-sectional area of the cylinders 42, 56 and 58 than the cross-sectional area of the cylinder 40, a much greater force may be obtained by actuation of the cylinders 42, 56 and 58 to strongly compress the refuse against the rear doors of the body than the force exerted by the cylinder 40 in loosely packing the refuse in the body.

It will also be apparent that the cylinders 42, 56 and 58 may be of such lengths that when these cylinders are fully extended, the packer blade will be positioned somewhat forwardly of the rear doors of the body, so that there is no danger of damaging the equipment by overextending these cylinders in strong compacting the refuse.

When the refuse has been thus strong compacted in the rear portion of the body, the valve lever 108 may be moved to the left, from the position of FIGURE 5, to connect the return line 102 in communication with the flow line 82 and the discharge line 94 in communication with the flow line 84, whereupon fluid under pressure may enter the cylinders 56 and 58 exteriorly of the cylinder 42, to retract the cylinders, pressure fluid in the cylinder 42 being at the same time allowed to return to the reservoir 88.

When the body has thus been substantially filled with refuse, the vehicle is driven to a suitable location for unloading the refuse, whereupon the rear doors 16 may be opened and the cylinders 42, 56 and 58 actuated to eject the refuse rearwardly from the body. When the cylinders 42, 56 and 58 have been fully extended, the cylinder 40 may then be actuated to push the packer blade further rearwardly to the position illustrated in FIGURE 4,

wherein the lower portion of the blade extends beyond the rear doors **16**, so that the refuse will be completely discharged from the vehicle. By then retracting the cylinders **40**, **42**, **56** and **58**, the packer blade is returned to the fully retracted position of FIGURE 1, whereupon the rear doors may be closed and the vehicle again loaded with refuse.

Because of the longitudinal spacing of the rollers **20**, in engagement with the channels **22** of the trackway, the packer blade wil be securely held upright against tilting movement during the operation of the vehicle. Moreover, because of the hollow construction of the packer blade and the provision thereon of the rearwardly projecting hood shaped projection **28**, the blade actuating mechanism will be protected against the entrance of foreign matter which might otherwise cause clogging of the trackway.

It will also be seen that the invention, constructed and operated as described above, provides a refuse collection vehicle which is of rugged construction, which may be quickly loaded with large quantities of refuse and from which the refuse may be easily and completely unloaded.

The refuse vehicle structure of the invention is intended to provide packer blade operating mechanism which is of compact design capable of being completely installed within the confines of the body of the vehicle, and by which the maximum available force of the hydraulic system is applied in the direction of compaction of the refuse, thus provide equipment which is of the maximum efficiency for the purpose for which it is designed.

The invention is disclosed herein on connection with a certain specific construction and arrangement of parts, but it will be understood that this is intended by way of illustration only, and that numerous changes can be made in the construction of the various parts, as well as the arrangement of the same within the spirit of the invention and the scope of the appended claims.

Having thus clearly shown and described the invention, what is claimed as new and desired to secure by Letters Patent is:

1. In a refuse handling vehicle having a body with its longitudinal axis parallel with the axis of the vehicle, said body having doors at its rear end and a loading opening proximate its front end, an upright packer member movably mounted in the body for longitudinal movement therein, said member being movable to one position to allow the loading of refuse into the body through said opening rearwardly of the member and to another position extending beyond the rear end of the body to unload such refuse and means for moving the member longitudinally in the body comprising horizontally disposed, axially aligned pressure cylinders in the body forwardly of the member, the combined lengths of said cylinders when either of said cylinders is retracted and the other cylinder is extended being less than the distance between the member and doors when the member is in said one position and the doors are closed and the combined lengths of the cylinders when extended being greater than such distance, means forming an operating connection between one of said cylinders and said member to move the member rearwardly away from the other cylinder upon the admission of pressure fluid into said one cylinder, means forming an operating connection between said other cylinder and said body to move said member with said one cylinder from said one position toward said other position upon the admission of pressure fluid into said other cylinder and means operable to selectively admit pressure fluid into each of said cylinders, said other cylinder being of smaller diameter than said one cylinder to provide for faster movement of said packer member from said one position toward said other position during extension of said other cylinder than the movement of said packer member during extension of said one cylinder.

2. In a refuse handling vehicle having a body with its longitudinal axis parallel with the axis of the vehicle, said body having doors at its rear end and a loading opening proximate its front end, an upright packer member movably mounted in the body for longitudinal movement therein from one position forwardly of said opening to another position rearwardly thereof to move refuse loaded into the body through said opening rearwardly to clear the opening and for movement to a position extending beyond the rear end of the body when the doors are open to unload such refuse, and means for moving the member longitudinally in the body comprising horizontally disposed, axially aligned, pressure cylinders in the body forwardly of the member, the combined lengths of said cylinders when extended being greater than the distance between said one position and the rear end of the body and neither of said cylinders being of sufficient length when extended to move the packer member from said one position into contact with said doors when closed, means forming an operating connection between one of said cylinders and said member to move the member rearwardly away from the other cylinder upon the admission of pressure fluid into said one cylinder, means forming an operating connection between said other cylinder and said body to move said one cylinder and member from said one to said other position, the area of said other cylinder against which pressure is exerted to move said member being less than the area of said one cylinder against which such pressure is exerted and means operable to selectively admit pressure fluid into each of said cylinders, to move said member upon admission of pressure fluid to said other cylinder from said one to said other position at a speed in excess of the speed of movement of the member rearwardly from said other position and upon admission of pressure fluid to said one cylinder to apply a greater force to the refuse during rearward movement of the member from said other position than the force applied thereto during the movement of the member from said one to said other position.

3. In a refuse handling vehicle having a body with its longitudinal axis parallel with the axis of the vehicle, said body having doors at its rear end and a loading opening proximate its front end, an upright packer member movably mounted in the body for longitudinal movement therein from one position forwardly of said opening to another position rearwardly thereof to move refuse loaded into the body through said opening rearwardly to clear the opening and for movement to a position extending beyond the rear end of the body when the doors are open to unload such refuse, and means for moving the member longitudinally in the body comprising a set of horizontally extending telescopic pressure cylinders connected at one end to said member, a single pressure cylinder of smaller diameter than the cylinders of said set disposed in longitudinal alignment with and connected at one end to the other end of said set and whose other end is connected to the body to move the set and member from said one position toward said other position upon the admission of pressure fluid to said single cylinder, the combined lengths of the cylinders of said set when extended being less than the distance from said other position to said doors when closed and the combined lengths of the cylinders of said sets and said single cylinder when said sets and single cylinder are extended being greater than such distance, and means operable to selectively admit pressure fluid into said set and said cylinder.

4. In a refuse handling vehicle having a body with its longitudinal axis parallel with the axis of the vehicle, said body having doors at its rear end and a side loading opening located to provide a loading zone proximate the forward end of the body and a compacting zone extending from the loading zone to the rear end of the body, an upright packer member movably mounted in the body for longitudinal movement therein, said member being movable rearwardly from a forward position in said loading

zone to move refuse in the body from said loading zone into said compacting zone and rearwardly from said loading zone into said compacting zone and rearwardly from said loading zone to compact such refuse against said doors when closed, and means for moving the member longitudinally in the body comprising a set of horizontally extending telescopic pressure cylinders connected at one end to the member, a single pressure cylinder of smaller diameter than the largest cylinder of said set disposed in longitudinal alignment with and connected at one end to the other end of the set and whose other end is connected to the body to move the member with said set from said forward position toward said compacting zone upon the admission of pressure fluid to said single cylinder, said single cylinder being of a length to move the member rearwardly at least to the rear end of said loading zone, the combined lengths of the cylinders of said set when extended being less than the distance from said loading zone to said doors and neither the combined lengths of the cylinders of said set nor the length of said single cylinder alone being sufficient to move said member into contact with said doors when closed, and means operable to selectively admit pressure fluid into said set and said single cylinder.

5. In a refuse handling vehicle having a body with its longitudinal axis parallel with the axis of the vehicle, said body having doors at its rear end and a side loading opening located to provide a loading zone proximate the forward end of the body and a compacting zone extending from the loading zone to the rear end of the body, an upright packer member movably mounted in the body for longitudinal movement therein, said member being movable rearwardly from a forward position in said loading zone to move refuse in the body from said loading zone into said compacting zone and rearwardly from said loading zone to compact such refuse against said doors when closed, and means for moving the member longitudinally in the body comprising a set of horizontally extending telescopic pressure cylinders connected at one end to the member, a pressure cylinder disposed in longitudinal alignment with and connected at one end to the other end of the set and whose other end is connected to the body to move the member with said set from said forward position toward said compacting zone upon the admission of pressure fluid to said cylinder, said cylinder being of smaller diameter than the cylinders of said set and of shorter length when extended than said set when the cylinders of the set are extended and neither said set nor said cylinder alone being of sufficient length when extended to move said member into contact with said doors when the doors are closed, and means operable to selectively admit pressure fluid into said cylinder and set to move said member in said loading zone at a speed in excess of the speed of movement of the member in said compacting zone and to apply a compacting force to the refuse in said compacting zone in excess of the loading force applied thereto in said loading zone.

6. In a refuse handling vehicle having a body with its longitudinal axis parallel with the axis of the vehicle, said body having doors at its rear end and a loading opening proximate its front end to provide a loading zone and a compacting zone located rearwardly of said loading zone, an upright packer member movably mounted in the body for longitudinal movement therein from one

position to permit the loading of refuse into the body through said opening rearwardly of said member and to another position to move the refuse toward the rear of the body, and means for moving the member longitudinally in the body comprising a set of horizontally extending telescopic pressure cylinders in the body connected at one end to said member, a horizontally extending pressure cylinder disposed in longitudinal alignment with and connected to the other end of said set and whose other end is connected to the body to move the member from said one position toward said other position upon the admission of pressure fluid into the cylinder, the combined lengths of said set and cylinder when the set is extended and said cylinder is retracted being less than the distance between said member and the rear end of the body when the member is in said one position and such combined lengths when said set and cylinder are extended being greater than such distance the area of said cylinder against which pressure is exerted to move said member being smaller than the area of said set against which such pressure is exerted, and means operable to selectively admit pressure fluid into said set and said cylinder, to move said member in said loading zone at a speed in excess of the speed of movement of the member in said compacting zone and to apply a compacting force to the refuse in said compacting zone in excess of the loading force applied thereto in said loading zone.

7. In a refuse handling vehicle having a body with its longitudinal axis parallel with the axis of the vehicle, said body having doors at its rear end and a loading opening proximate its front end to provide a loading zone and a compacting zone located rearwardly of said loading zone, an upright packer member movably mounted in the body for longitudinal movement therein from one position to permit the loading of refuse into the body through said opening rearwardly of said member and to another position to move the refuse toward the rear of the body, and means for moving the member longitudinally in the body comprising a set of horizontally extending telescopic pressure cylinders in the body connected at one end to said member, a horizontally extending pressure cylinder disposed in longitudinal alignment with and connected to the other end of said set and whose other end is connected to the body to move the member from said one position toward said other position upon the admission of pressure fluid into the cylinder, said cylinder being of smaller diameter than the cylinders of said set neither said set nor said cylinder alone being of sufficient length when extended to move said member into contact with said doors and means operable to selectively admit pressure fluid into said set and said cylinder to move the refuse longitudinally in the loading zone more rapidly than in said compacting zone and to apply a greater compacting force to the refuse in said compacting zone than the force applied thereto in said loading zone.

References Cited in the file of this patent

UNITED STATES PATENTS

2,716,965	Klamp	Sept. 6, 1955
2,934,226	Dempster et al.	Apr. 26, 1960
2,999,606	Kamin	Sept. 12, 1961