United States Patent [19]

Martinez

[11] Patent Number: Des. 293,783

[45] Date of Patent: ** Jan. 19, 1988

[54] COMBINATION TELEPHONE AND ANSWERING SET

[75] Inventor: **Arthur T. Martinez**, Long Beach, Calif.

[73] Assignee: **Fortel Corporation**, Compton, Calif.

[**] Term: **14 Years**

[21] Appl. No.: **779,236**

[22] Filed: **Sep. 23, 1985**

[52] **U.S. Cl.** **D14/53**; D14/57; D14/4; D14/63

[58] **Field of Search** ..... D14/52, 53, 4, 57, 60, D14/62, 63; 179/179, 100 L, 100 R, 100 D, 101, 102, 103

[56] **References Cited**

U.S. PATENT DOCUMENTS

D. 227,784	7/1973	Janda et al.	D14/4
D. 238,585	1/1976	Derwood	D14/52 X
D. 262,207	12/1981	Kaczkos	D14/64 X
D. 266,162	9/1982	Martinez	D14/4
D. 267,007	11/1982	Chiou	D14/53 X
D. 279,372	6/1985	Baba et al.	D14/4 X
D. 282,655	2/1986	Kaker et al.	D14/4
D. 283,614	4/1986	Somaschini	D14/63 X
D. 284,368	6/1986	Stansbury, Jr.	D14/4
D. 285,554	9/1986	Beaumont et al.	D14/52
D. 286,404	10/1986	Skigen et al.	D14/63

OTHER PUBLICATIONS

Best catalog–1983–84, at p. 332: Record–A–Call model CAT. 2, item #5.

DAK Industries Inc. catalog–Early Summer 1985; at p. 65; DAK's voice print answering mach; top left FIG. 52.

B. A. Pargh Co. Inc; 1983 catalog ©; at p. 33, bottom, model KXT1420, Panasonic answerer.

Best catalog 1984–85; at p. 296, "Cobra" answer machine; model AN3100.

Primary Examiner—Wallace R. Burke
Assistant Examiner—Horace B. Fay
Attorney, Agent, or Firm—Paul R. Wylie

[57] CLAIM

The ornamental design for a combination telephone and answering set, as shown and described.

DESCRIPTION

FIG. **1** is a front, top and right side view of a combination telephone and answering set showing my new design;

FIG. **2** is a top plan view thereof;

FIGS. **3** and **4** are respectively left and right side elevational views thereof;

FIG. **5** is a front elevational view thereof;

FIG. **6** is a rear elevational view thereof;

FIG. **7** is a bottom plan view thereof;

FIG. **8** is a front, top and right side perspective view of the stand thereof, and a right side and bottom perspective view of the handset thereof.

The cords of the set are omitted in some views and are shown only fragmentarily in FIG. **6** for ease of illustration.

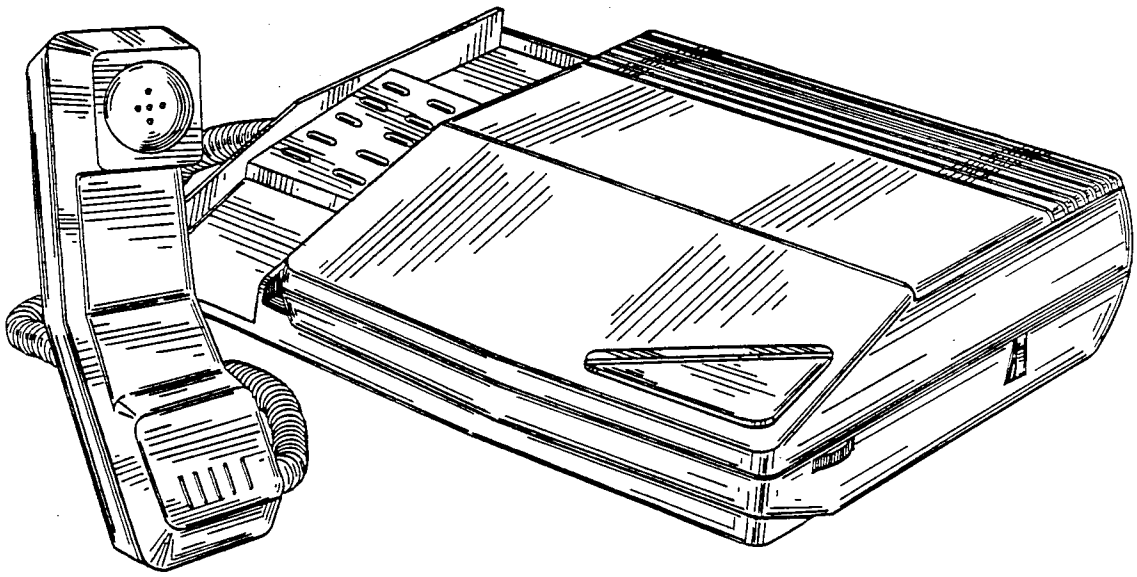

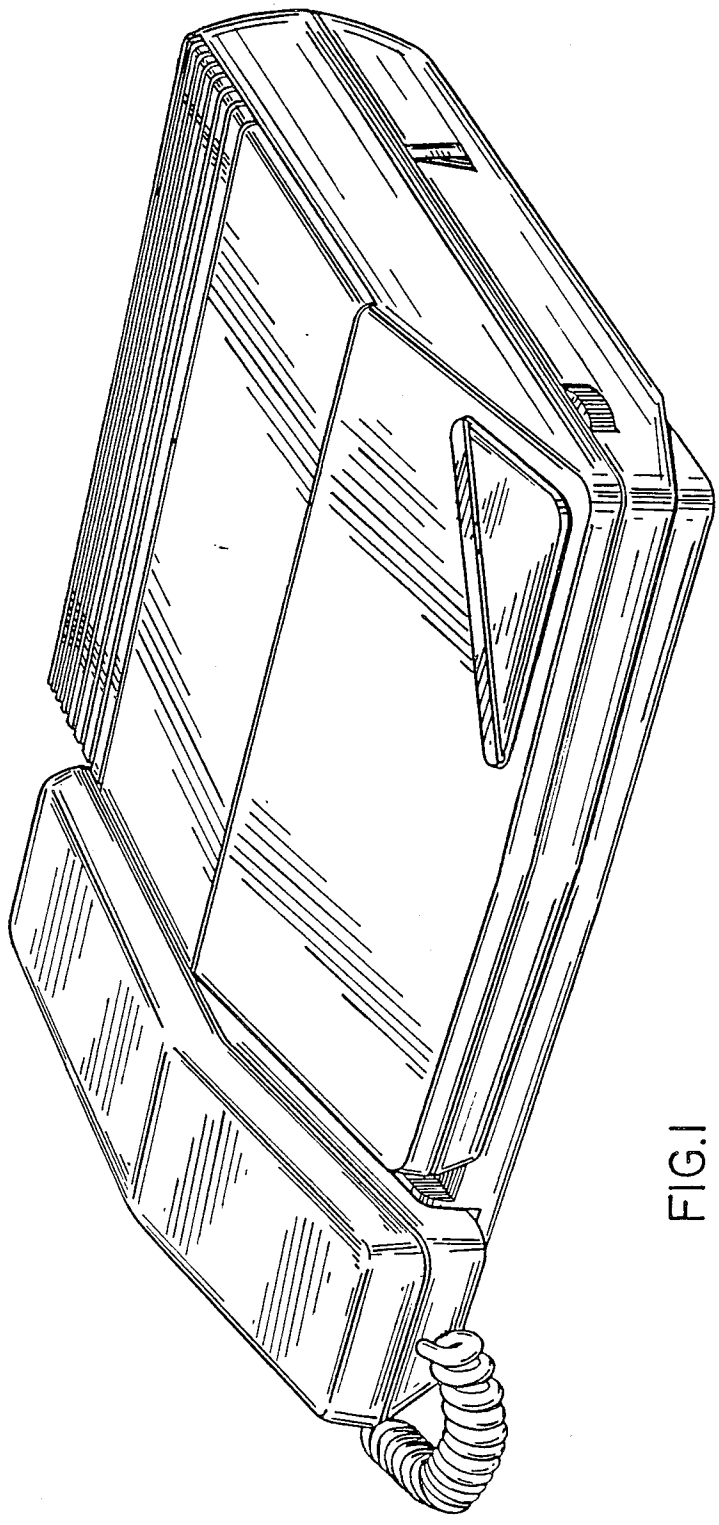

FIG.1

FIG. 2

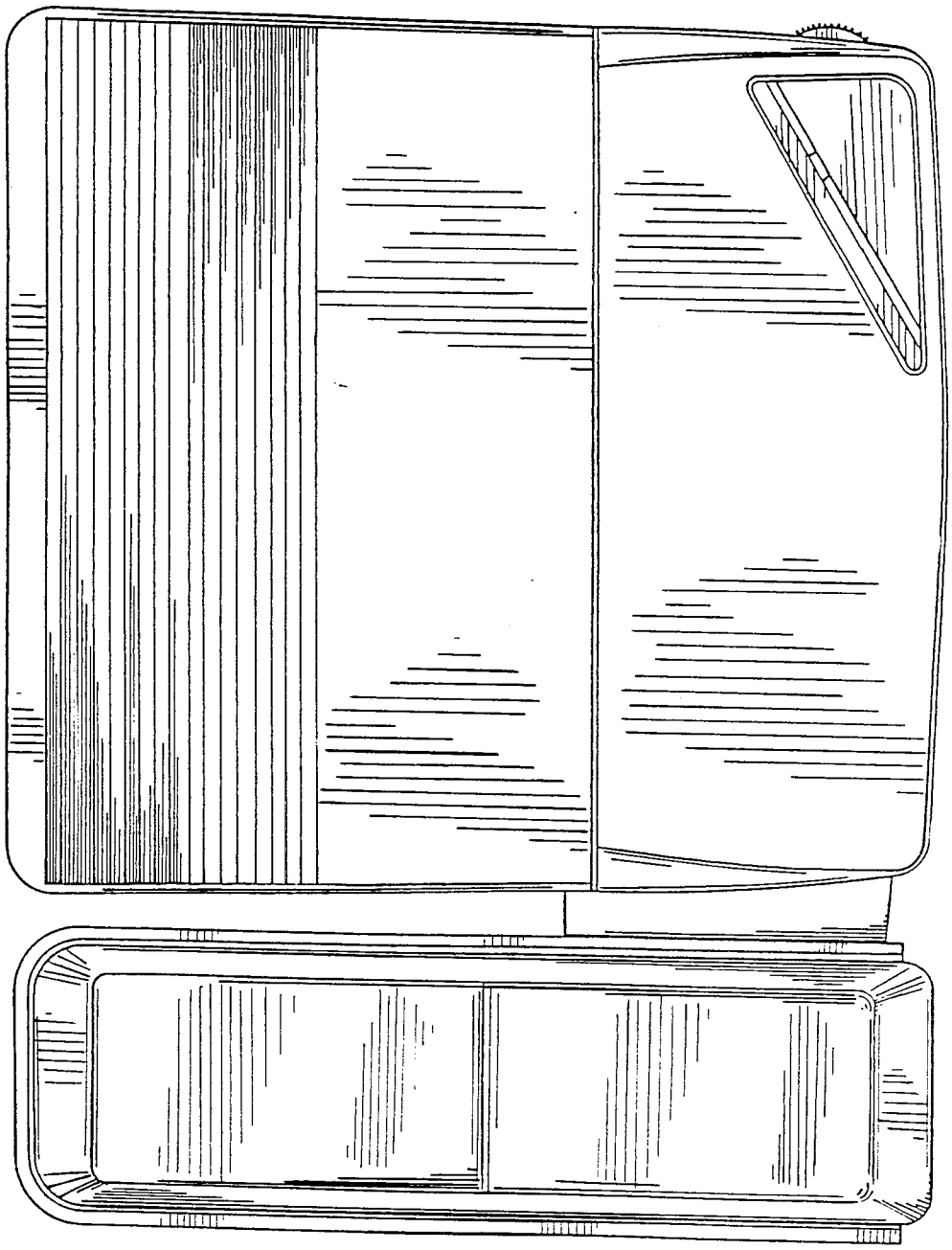

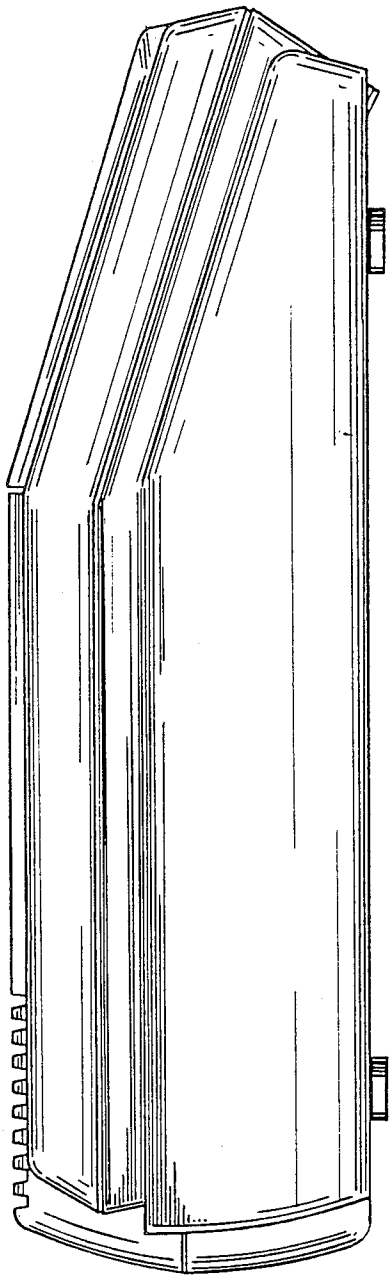

FIG. 3

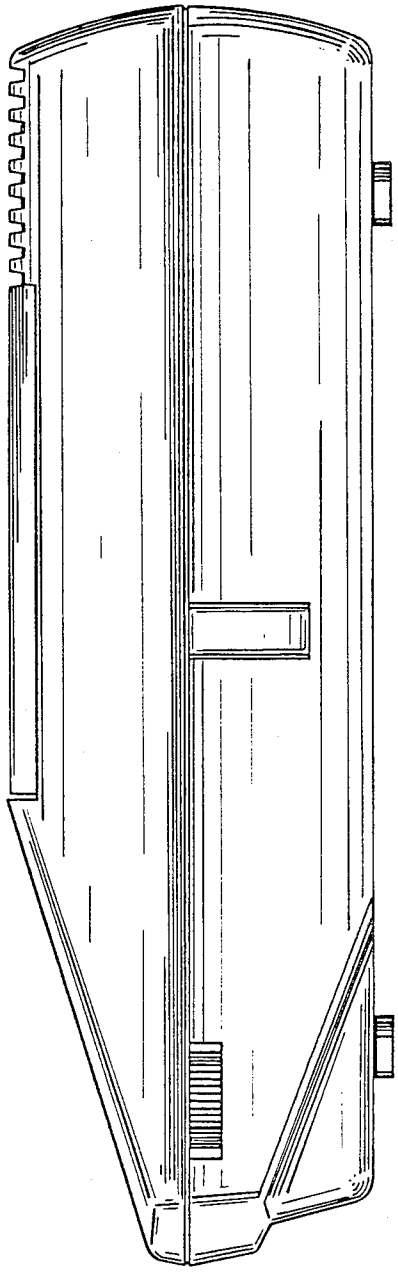

FIG. 4

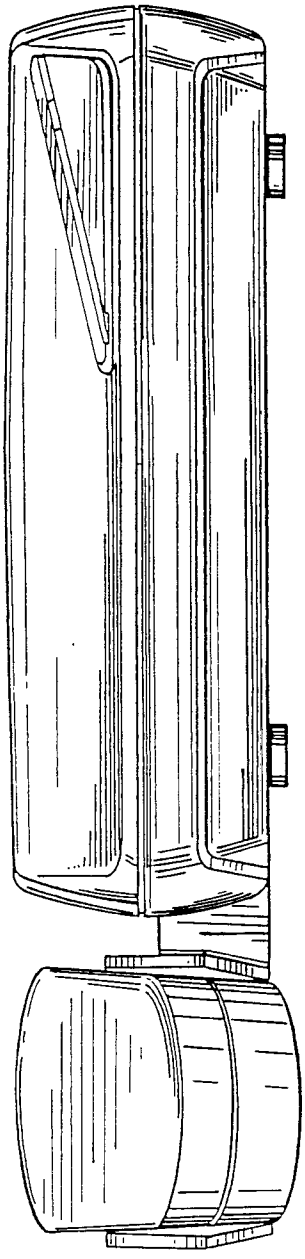

FIG.5

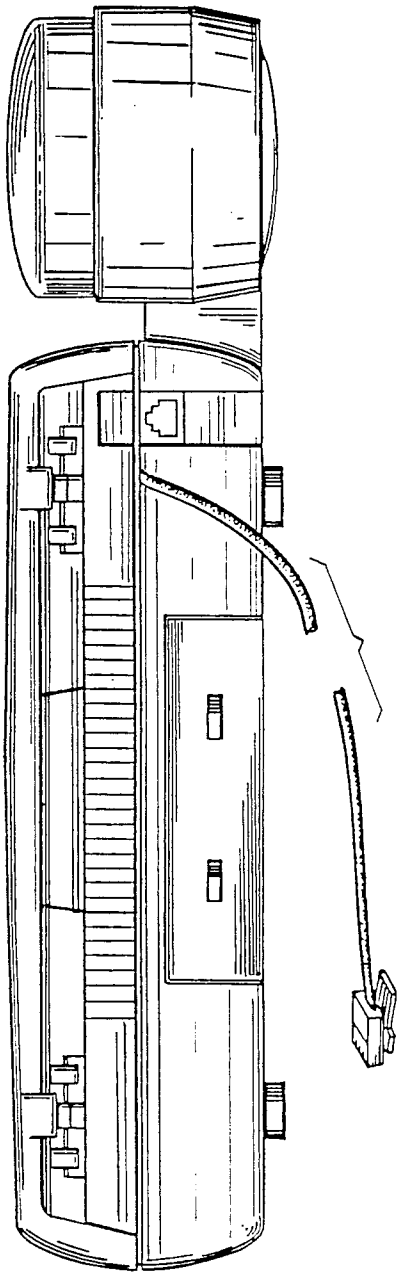

FIG.6

FIG.7

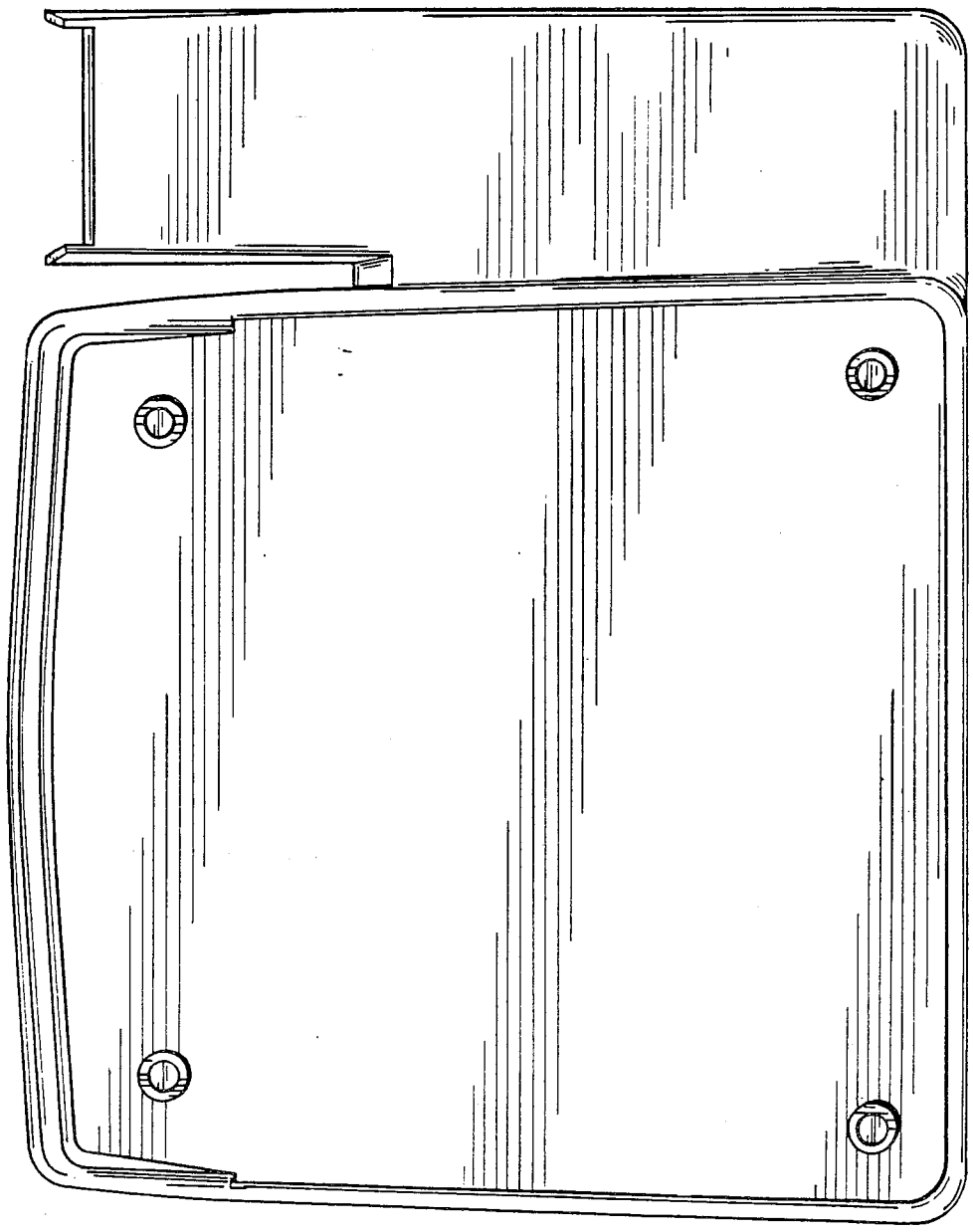

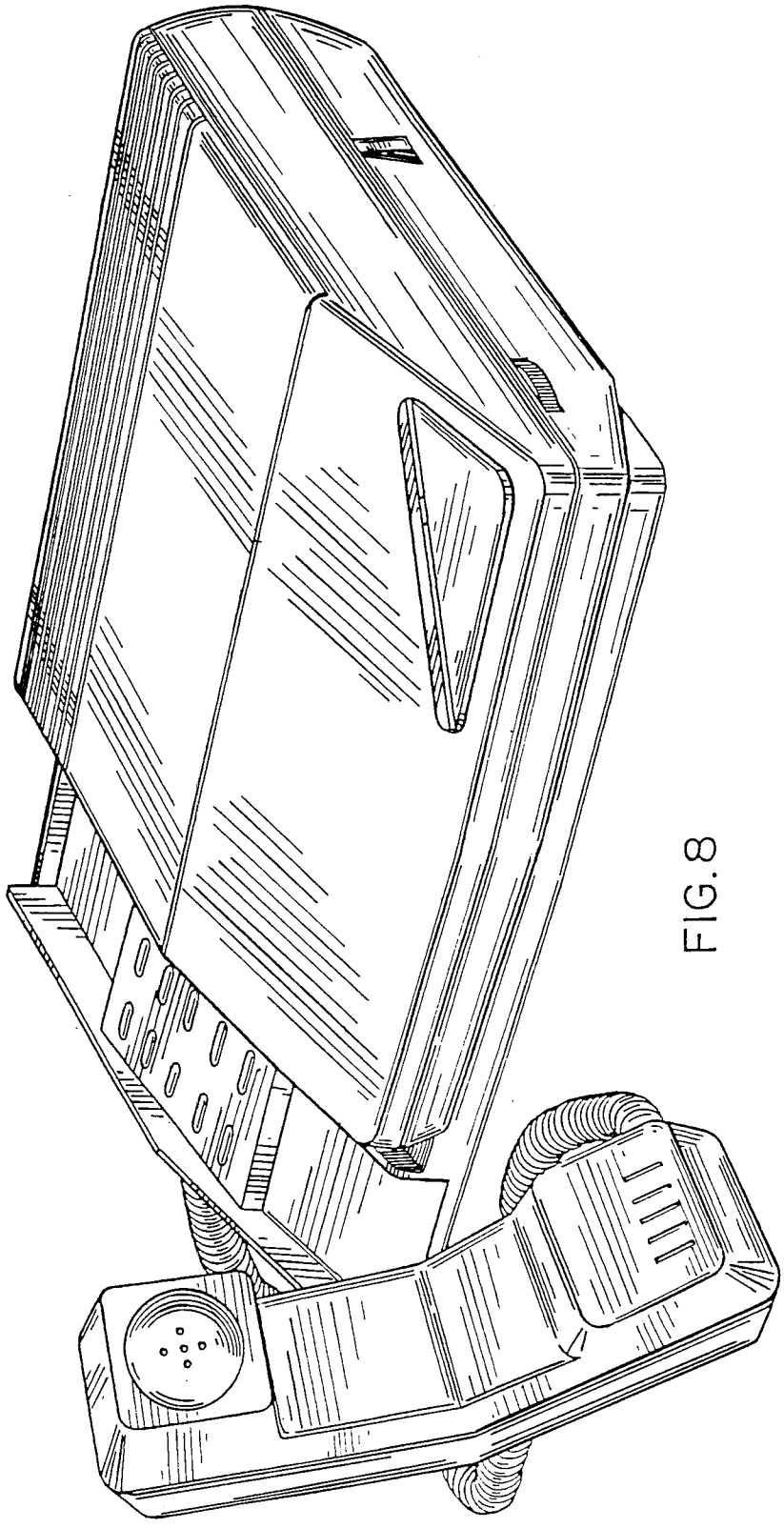

FIG. 8