Jan. 26, 1965 H. P. FURTH 3,167,043

METAL FORMING DEVICES AND METHOD USING MAGNETIC AND HYDRAULIC PRESSURE

Filed April 11, 1962

Fig. 1a.

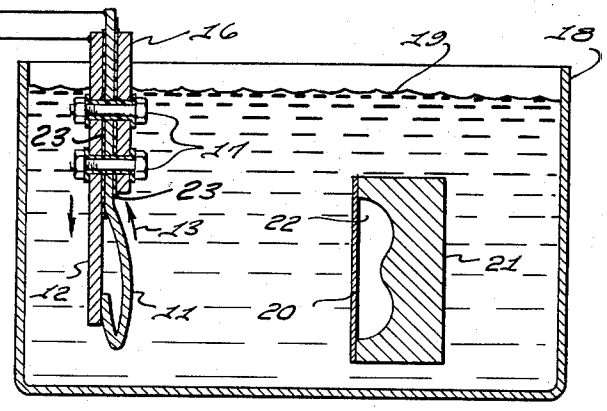

Fig. 1b.

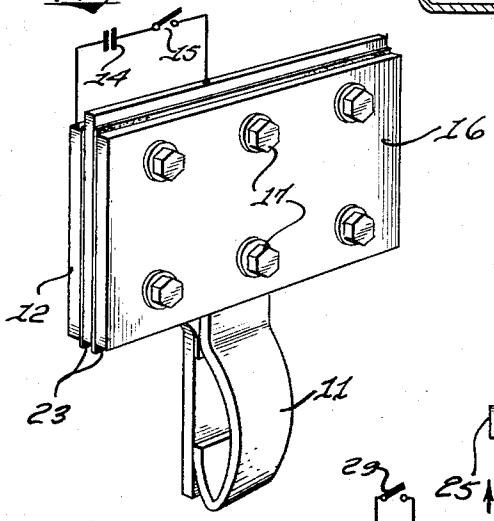

Fig. 2a.

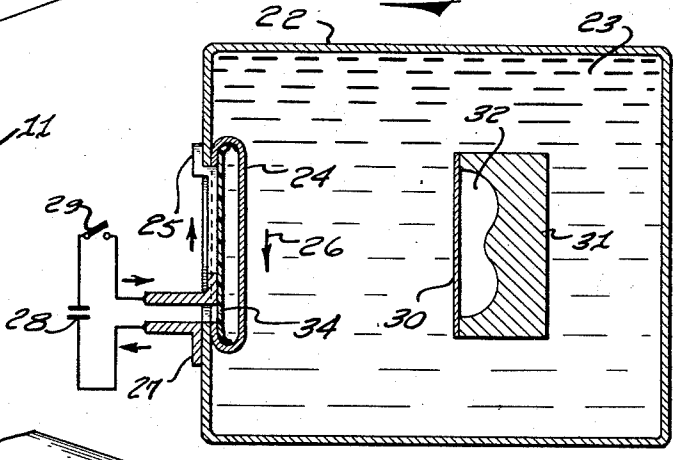

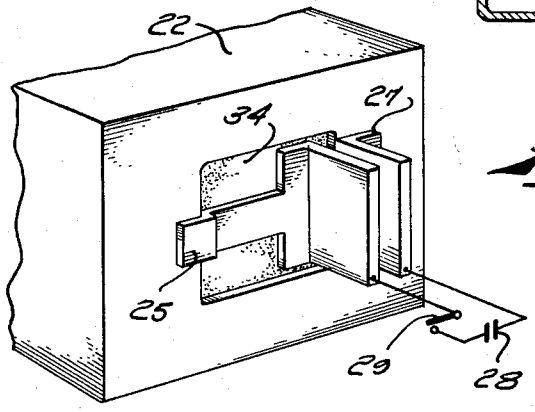

Fig. 2b.

INVENTOR.
HAROLD P. FURTH
BY John A. Duffy
ATTORNEY

United States Patent Office 3,167,043
Patented Jan. 26, 1965

3,167,043

METAL FORMING DEVICES AND METHOD USING MAGNETIC AND HYDRAULIC PRESSURE

Harold P. Furth, Berkeley, Calif., assignor to Advanced Kinetics, Inc., Costa Mesa, Calif., a corporation of California

Filed Apr. 11, 1962, Ser. No. 186,785
8 Claims. (Cl. 113—44)

The present invention relates generally to metal forming by hydraulic pressure, and more particularly to devices and methods where metal is formed by a hydraulic pressure that is generated by exerting magnetic pressure against a conducting diaphragm.

A sheet-metal work piece and die immersed in a fluid can be subjected to high transient hydraulic pressure, forming the metal against the die. This pressure is usually generated by detonation of an explosive immersed in the fluid, or by a discharge of electric current through a wire immersed in the fluid or through a small region of the fluid itself between electrodes. Generating pressure by creating an explosion in the fluid creates an uncontrollable pressure wave commencing from the point of explosion. The magnitude and duration of the pressure wave are beyond the operator's control seriously affecting the efficiency and quality of the forming process. Generally, pressure by the electric current discharge method is likewise uncontrollable, inefficient, and of poor reliability. The electrodes erode and must be replaced for each operation. Accordingly it is an object of this invention to provide a hydraulic metal forming device of improved efficiency and reliability.

The device of the present invention provides a device and method for forming metal, wherein hydraulic pressure is generated by the rapid displacement of a diaphragm immersed in the fluid, the diaphragm being displaced by magnetic pressure.

Utilizing magnetic pressure which can be generated with precise control of magnitude and duration, a device is provided which permits the generation of a pressure wave within a fluid of predetermined shape, magnitude, and duration within precise limits not available within the known art. Efficiency, reliability, and quality of operation are achieved to a high degree because of the control achieved over the magnetic pressure pulse which generates the pressure shock waves in the fluid.

It is therefore another object of this invention to provide a hydraulic metal forming device in which the pressure waves in the fluid can be controlled in shape, magnitude, and duration.

It is a further object of this invention to provide a hydraulic metal forming device of improved efficiency, quality, and reliability.

Other objects and advantages of the present invention will become apparent from the following description and appended claims.

In the drawings:

FIGURE 1 is a schematic view of an immersible device for generating pressure waves in a fluid by magnetic means. FIGURE 1A is a sectional view of the device, forming tank, work, and die. FIGURE 1B is a perspective view of the pressure-wave-generating device.

FIGURE 2 is a schematic view of a device, mounted on one side of a forming tank, for increasing the pressure of the fluid enclosed in the tank by magnetic means. FIGURE 2A is a sectional view of the device, forming tank, work, and die. FIGURE 2B is a perspective view of the device and forming tank.

According to a principal aspect of the invention a metal work piece and associated die are immersed in a pressure transmitting fluid within a forming tank. A flexible diaphragm is positioned in the tank parallel to and adjacent

the work piece. Means are provided for generating magnetic pressure on the diaphragm whereby the diaphragm is displaced within the fluid to produce pressure shock waves which are transmitted to the work piece. In this way the work piece may be formed against the die.

In order to form a metal work piece efficiently by hydraulic means, hydraulic pressure in the working fluid may be generated either by displacing a diaphragm rapidly through the fluid, thus generating a pressure wave, or else by reducing the volume of the forming tank by means of a flexible diaphragm in a wall of the tank, thus giving rise to an increasing pressure of the fluid in the tank. In either case, the displacement of the diaphragm can be accomplished as rapidly and efficiently as desired by making the diaphragm of a conducting material and applying magnetic pressure against it.

Magnetic pressure may be applied to a conducting diaphragm by setting up a transient magnetic field in such a manner that the spatial extent of the magnetic field is limited by the diaphragm. For example, if a coil is held near the diaphragm and a pulsed magnetic field is generated by pulsing current through the coil, the magnetic field is prevented from penetrating through the diaphragm by eddy currents that are induced therein. There results a magnetic pressure.

$$P=B^2/8\pi \qquad (1)$$

against the diaphragm, where B is the strength of the magnetic field. The most efficient means of applying magnetic pressure is to pass a current directly along the diaphragm and return it by means of a plane return conductor that is nearly parallel to the diaphragm and close to it. In that case the magnetic field extends over the least volume possible, and thereby the energy requirement for setting up the magnetic field is minimized. Particularly if the discharge time of the capacitor bank that produces the magnetic field is short compared to the duration of the forming process, nearly perfect overall efficiency can be achieved for the forming process.

The advantages of the present invention are the following. As in other hydraulic forming devices and methods, a work piece of arbitrary shape can be formed with highly uniform pressure in a standard forming tank, thus avoiding the need to make a specially designed forming head for each different forming operation. As in other devices and methods using magnetic pressure, the duration and strength of the pressure pulse can be closely and conveniently controlled, and the efficiency can be made very high. By comparison, the direct passage of current through the working fluid is an inefficient and poorly controllable pressure-generating method, since the heating, vaporization and ionization of the fluid plays an essential role. The present invention also avoids the use of electrodes, which tend to erode and must be replaced at frequent intervals, and avoids the use of wires that are sometimes exploded electrically in the fluid, and that must be replaced for each forming operation. The present invention, like other electrically powered hydraulic forming methods, has the advantage over forming methods using explosives that safety of the operating personnel is greatly increased and that high repetition rates of the forming operation are more easily achieved.

Referring now to the drawings:

In the forming device shown in FIGURE 1, a flexible metal diaphragm **11** is attached to a metal backing plate **12**, and a current indicated by the arrows **13** is passed along the backing plate and along the diaphragm. A magnetic field then appears inside the loop formed by the backing plate and diaphragm, and interacts with the current in the diaphragm **11** to displace the diaphragm **11** away from the backing plate **12**. The pulsed current is generated by a capacitor bank **14**, which is discharged by

a switch 15. An auxiliary switch may be used to short-circuit the capacitor bank after discharge, if it is desired to avoid ringing of the current. The clamping plate 16 holds the upper part of the diaphragm 11 against the backing plate 12, thus restricting the motion of the diaphragm to its lower part. The upper part of the diaphragm 11 is made wider and is clamped closely against the backing plate 12, so as to minimize the volume of stray magnetic field. The backing plate 12 and diaphragm 11 both have an electrically insulating coating or sleeve 33, to prevent electrical short-circuiting from one to the other, directly or through the working fluid. The assembly is clamped together by the insulated draw-bolts 17. The forming tank 18 is filled with a suitable fluid 19, usually water, into which is immersed the work piece 20 and the die 21, the space between them being void of fluid and usually evacuated. The diaphragm 11 is placed near the work piece 20 and parallel to it, so that the pressure wave generated in the working fluid 19 by the displacement of the diaphragm 11 will transfer energy efficiently to the work 20. The velocity of displacement of the diaphragm 11 is usually made comparable to the speed of sound in the fluid, so that negligible energy is lost by the flow of fluid into the space between the diaphragm 11 and the backing plate 12, which would permit relaxation of the fluid pressure without performance of the desired work.

In the forming device shown in FIGURE 2, a closed metal forming tank 22 is filled with fluid 23. The flexible metal diaphragm 24 covers a window in the tank 22 and is connected to the tank both physically and electrically on all sides. A backing plate 25 is placed close to the diaphragm and parallel to it. One end of the backing plate 25 makes physical and electrical contact with the tank at one end of the window that is covered by the diaphragm 24. A current indicated by the arrows 26 is passed around the loop made by the backing plate 25, the diaphragm 26 and the return conductor 27. A magnetic field is therefore set up in this loop, and the resultant pressure on the diaphragm, which is strong only in the central region of the diaphragm covered by the backing plate, displaces the central portion of the diaphragm. Electrical insulation 34 is provided between the diaphragm and the backing plate and return conductor. The current pulse is drawn from the capacitor bank 28 by closing the switch 29. An auxiliary switch may be used to short-circuit the capacitor bank after discharge if it is desired to avoid ringing of the current. The work piece 30 and die 31 are immersed in the fluid 23, the space between the work and die being void of fluid and usually evacuated. The displacement of the diaphragm reduces the volume enclosed by the tank and exerts pressure on the fluid. The fluid in turn does the work of forming the work piece against the die. Since the compressed fluid cannot escape from the tank, the displacement of the diaphragm need not occur at a velocity comparable to the velocity of sound in the fluid, and the work need not be located near the diaphragm or be specially oriented.

The principles of the devices in FIGURES 1 and 2 can be combined in several ways. The device of FIGURE 1 can be mounted against a conducting wall of the forming tank, the wall being used as the backing plate. Alternatively a device with a sealed diaphragm, like the device of FIGURE 2, can be used for immersion into a tank.

Various of the novel features of the present invention are set forth in the following claims.

I claim:

1. A hydraulic metal forming device comprising,
a forming tank,
a work piece in said tank,
a die adajcent said work piece,
the space between said work piece and said die being evacuated,

an electrically conductive flexible diaphragm in said tank parallel to said work piece,
a high energy current source,
a conductor in said tank responsively connected to said current source and shaped to provide a magnetic field of predetermined strength,
said flexible diaphragm positioned within said magnetic field at a predetermined distance from said conductor,
means for providing a flow of current through said flexible diaphragm,
the current flowing in said conductor generating said magnetic field and the current flowing in said diaphragm interacting with said magnetic field to provide magnetic pressure on said diaphragm,
the magnetic pressure on said diaphragm causing said diaphragm to displace the fluid in said tank whereby pressure waves are transmitted through said fluid to form said work piece against said die.

2. The device recited in claim 1 wherein said conductor is conductively connected to said diaphragm to cause current to flow in said diaphragm.

3. In a hydraulic metal forming device wherein a work piece is formed against a die in a tank containing a fluid for transmitting pressure to form said work piece, the improvement comprising,
an electrically conductive plate in said tank responsively connected to a current source for providing a magnetic field of high strength,
an electrically conductive diaphragm having an upper end rigidly attached to said plate and a flexible lower end adjacent said plate,
means for providing a current path through said diaphragm,
the current flowing in said plate generating said magnetic field and the current flowing in said diaphragm interacting with said magnetic field to provide magnetic pressure on said diaphragm,
whereby the flexible end of said diaphragm displaces said fluid creating pressure waves which are transmitted through said fluid to form said work piece.

4. The device of claim 3 wherein said means for providing a current path through said diaphragm includes means for conductively connecting the lower end of said diaphragm to said plate and may be electrically insulating the upper end of said diaphragm for said plate, the upper end of said diaphragm being responsively connected to said current source whereby a current path is provided for said current source through said plate and said diaphragm.

5. The device of claim 3 wherein said tank is closed, and wherein there is provided a window in said tank, said diaphragm positioned to cover said window, whereby the flexible end of said diaphragm compresses said fluid.

6. The device of claim 3 wherein the upper portions of said backing plate and said diaphragm are wide compared to the narrow lower portions of said backing plate and said diaphragm.

7. In a hydraulic metal forming device wherein a work piece is formed against a die in a closed tank containing a fluid for transmitting pressure to form said work piece, the improvement comprising,
a wind at one end of said tank,
an electrically conductive diaphragm in said tank having its ends attached to said tank to cover said window,
means for generating magnetic pressure against said diaphragm, whereby said diaphragm displaces the fluid in said closed container to compress the fluid and form said work piece.

8. In a device for forming a metal work piece by hydraulic pressure,
a forming tank
a pressure transmitting fluid in said tank,
a die positioned in said tank adjacent to and in forming relation with said work piece,

means for producing pressure shock waves through said fluid to form said work piece against said die comprising,

a flexible electrically conductive metallic diaphragm in said tank parallel to and adjacent to said work piece,

and means for applying pressure on said diaphragm whereby said diaphragm is displaced within said fluid to produce said pressure shock waves, said pressure applying means comprising,

a transmission line responsively connected to a current source and having a portion shaped to provide a magnetic field of high strength,

said diaphragm positioned within said magnetic field at a predetermined distance from said transmission line,

and means for providing a flow of current in said diaphragm,

the current flowing in said transmission line generating said magnetic field and the current flowing in said diaphragm interacting with said magnetic field to provide magnetic pressure on said diaphragm.

References Cited by the Examiner

UNITED STATES PATENTS

2,559,227	7/51	Rieber	128—24
2,648,125	8/53	McKenna et al.	264—84
2,976,907	3/61	Harvey et al.	153—10
2,983,242	5/61	Cole	113—44
3,121,211	2/64	Eskin et al.	340—8

MICHAEL V. BRINDISI, *Primary Examiner.*

WILLIAM J. STEPHENSON, *Examiner.*