July 28, 1931. C. BOOTH 1,816,171

VALVE GRINDER

Filed April 12, 1929 4 Sheets-Sheet 1

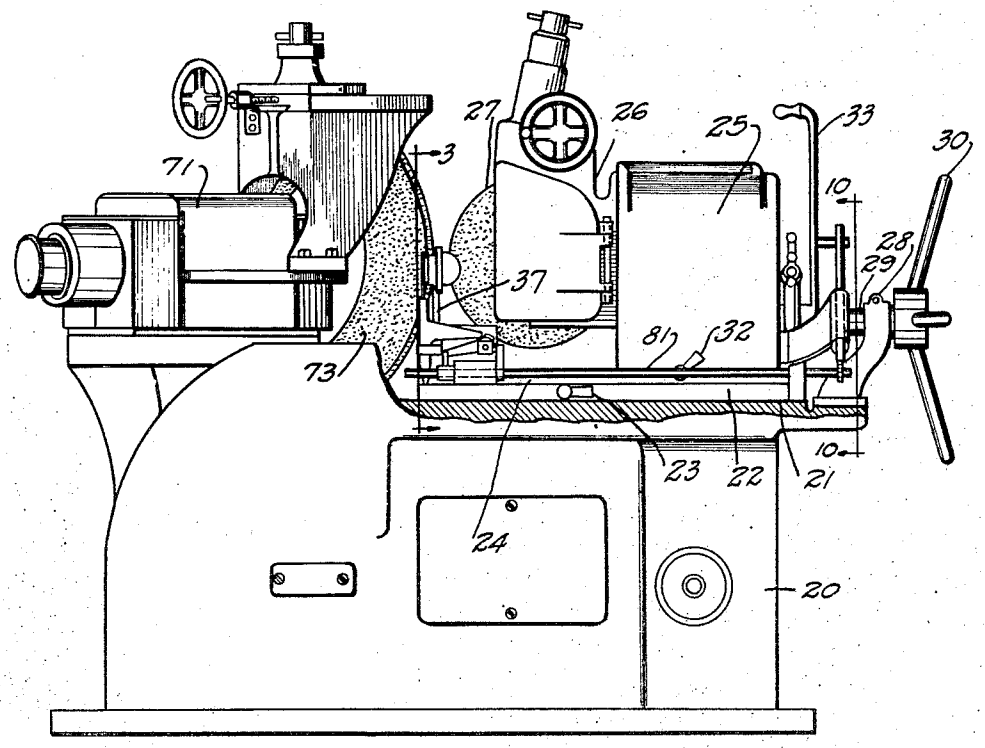

Fig. 1

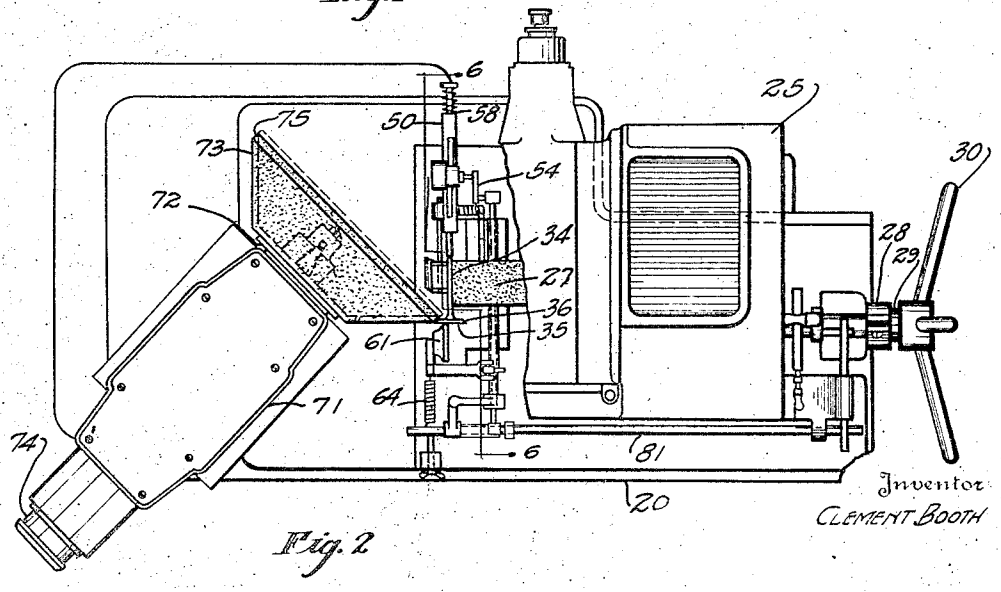

Fig. 2

Inventor
CLEMENT BOOTH

By A. K. Parsons

Attorney

July 28, 1931. C. BOOTH 1,816,171

VALVE GRINDER

Filed April 12, 1929 4 Sheets-Sheet 2

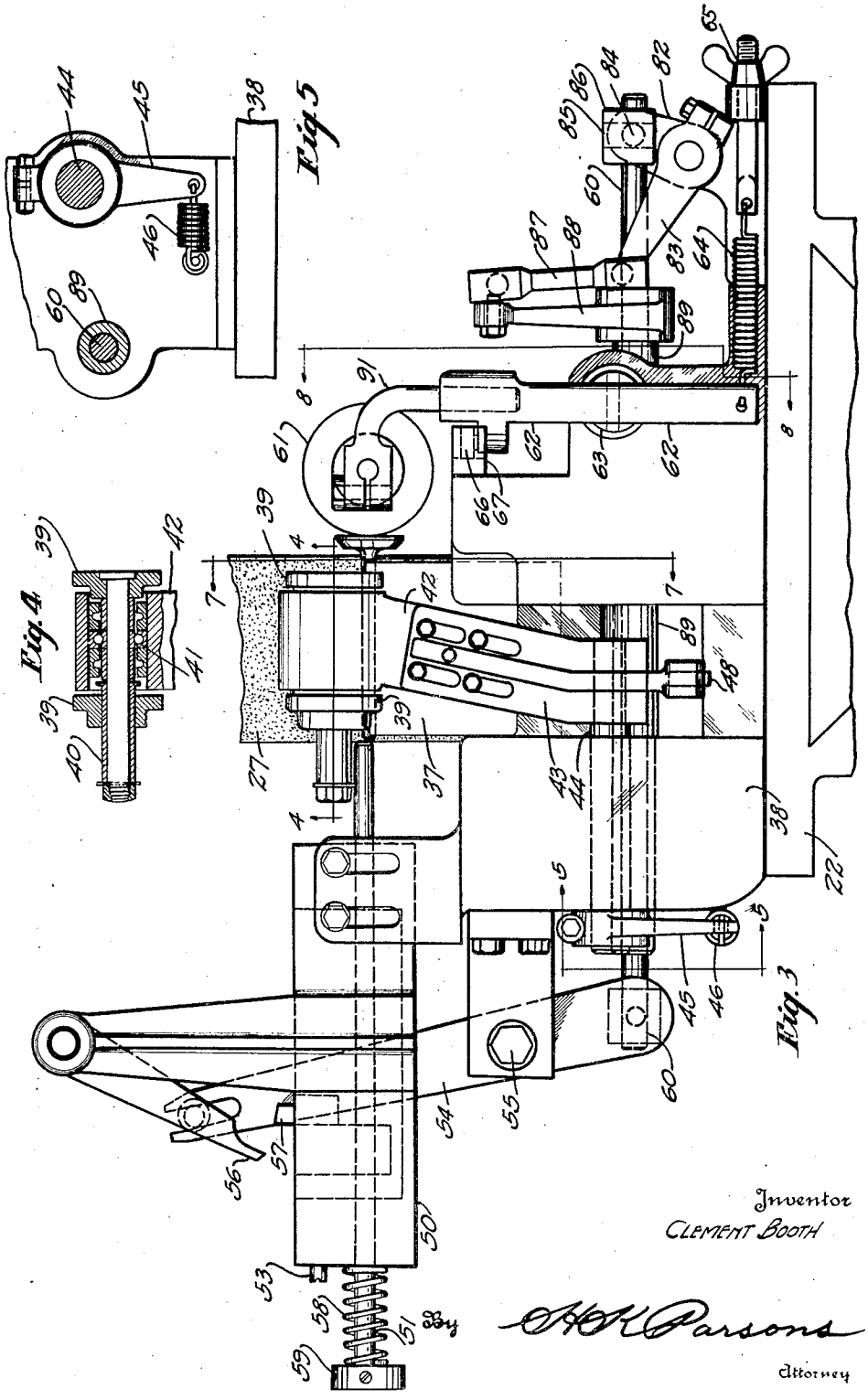

Fig. 5

Fig. 4

Fig. 3

Inventor
CLEMENT BOOTH

By H. K. Parsons
Attorney

July 28, 1931. C. BOOTH 1,816,171

VALVE GRINDER

Filed April 12, 1929 4 Sheets-Sheet 3

Fig. 6

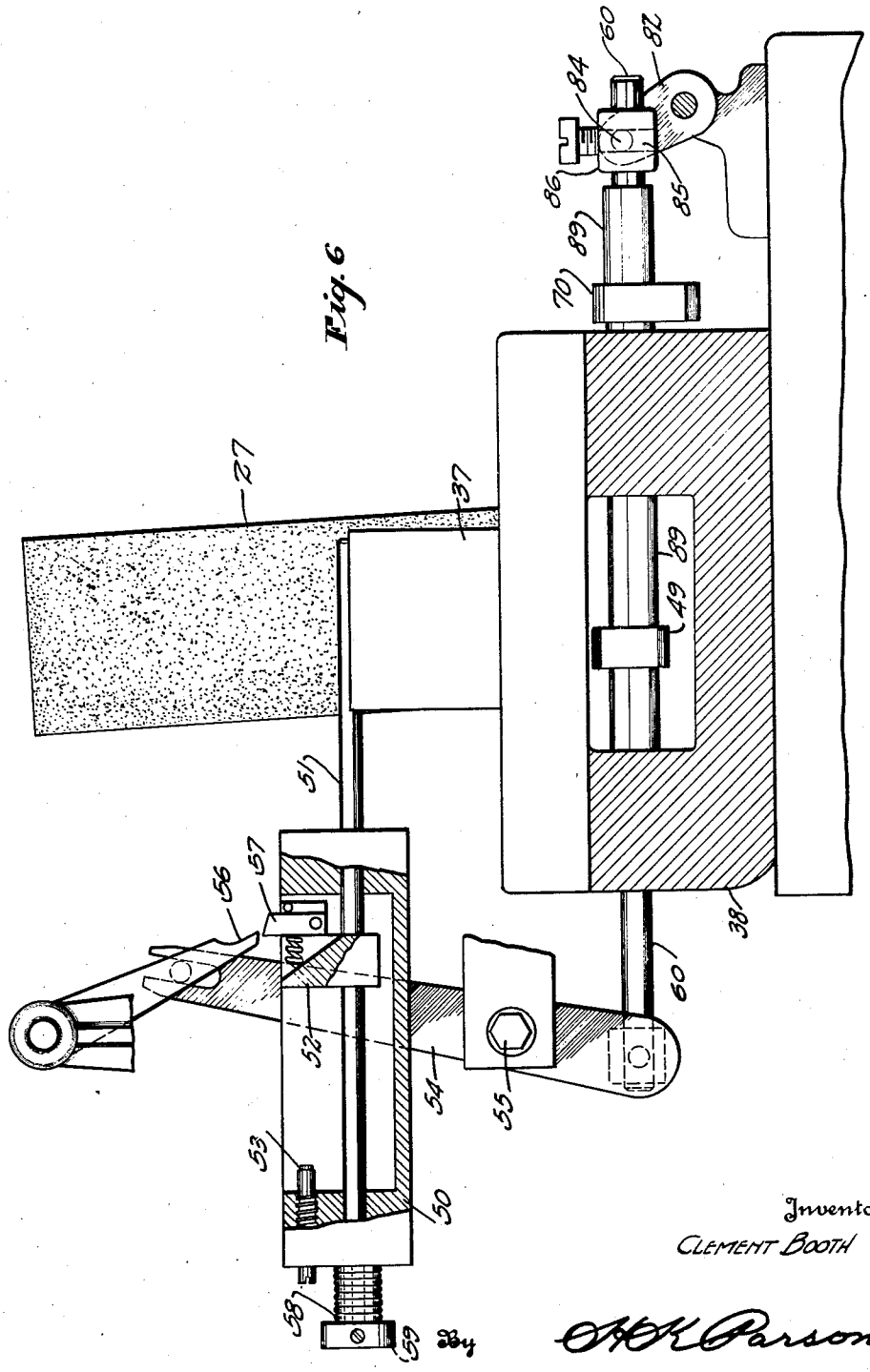

Inventor
CLEMENT BOOTH

By H. K. Parsons

Attorney

July 28, 1931. C. BOOTH 1,816,171

VALVE GRINDER

Filed April 12, 1929 4 Sheets-Sheet 4

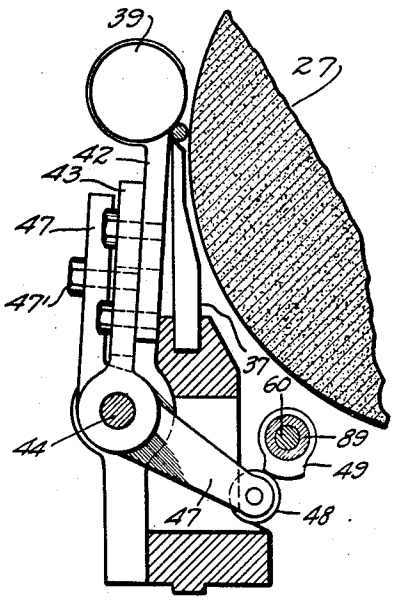

Fig. 1

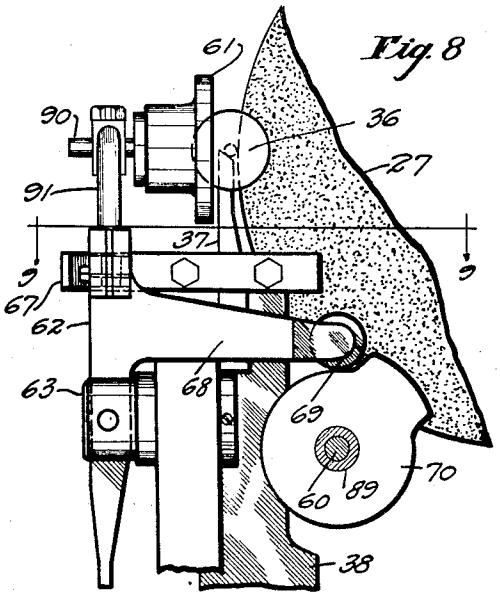

Fig. 8

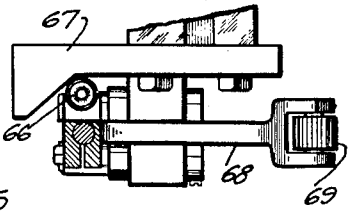

Fig. 9

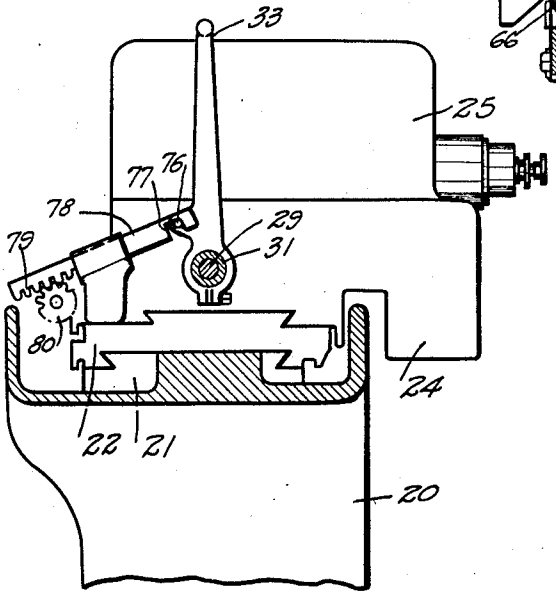

Fig. 10

Inventor
CLEMENT BOOTH

By O'K Parsons

Attorney

Patented July 28, 1931 1,816,171

UNITED STATES PATENT OFFICE

CLEMENT BOOTH, OF CINCINNATI, OHIO, ASSIGNOR TO CINCINNATI GRINDERS INCORPORATED, OF CINCINNATI, OHIO, A CORPORATION OF OHIO

VALVE GRINDER

Application filed April 12, 1929. Serial No. 354,631.

This invention relates to improvements in grinding machinery and more particularly to improved machinery adapted for use in the grinding of headed articles such as mushroom type automobile valves.

One of the principle objects of the present invention is the provision of an improved means for the formation of valve seats on valves or like articles which will eliminate the necessity of chucking the article prior to grinding and which will at the same time insure a more accurate concentricity of stem and seat surfaces than has been commercially attainable by the use of the prior art methods and mechanism.

A further object of the invention is the provision of an improved machine for formation of a ground surface on the head of a valve or like article in definite concentric relation to a previously formed stem thereon, which machine shall be readily adjustable to operate on different sized articles as respects to the diameter of the head or stem or to the length thereof.

Another object of the invention is the provision of an improved machine which shall be substantially automatic in operation and which will require minimum time and effort on the part of the operator in properly positioning the work within the machine, clamping, releasing and ejecting the work, thus reducing the idle time of the machine to a minimum and increasing the productivity thereof.

Other objects and advantages of the present invention should be readily apparent by reference to the following specification considered in conjunction with the accompanying drawings forming a part thereof and it will be understood that any modifications in structural details or combination of parts as hereinafter described within the scope of what is claimed may be made without departing from or exceeding the spirit of the invention.

Figure 1 is a front view of an embodiment of the invention.

Figure 2 is a plan view thereof.

Figure 3 is an enlarged elevation of the work supporting and controlling members as from the position 3—3 indicated in Figure 1.

Figure 4 is a fragmentary section on line 4—4 of Figure 3.

Figure 5 is a fragmentary section on line 5—5 of Figure 3.

Figure 6 is a section on line 6—6 of Figure 2.

Figure 7 is a vertical section through the work stem engaging mechanism as on line 7—7 of Figure 3.

Figure 8 is a section showing the work head engaging member as from the line 8—8 of Figure 3.

Figure 9 is a fragmentary section on line 9—9 of Figure 8.

Figure 10 is a section on line 10—10 of Figure 1.

In the drawings, the numeral 20 designates a suitable grinding machine bed provided with the longitudinally extending ways 21 for the main slide 22 capable of being secured in adjusted position on the bed as by clamp 23. Mounted on this slide is the supplemental slide 24 bearing the regulating wheel drive unit 25 which may be of conventional centerless type and includes a bracket member 26 bearing a regulating wheel 27 rotatable at a slow speed in a clockwise direction when viewed from the front of the machine. In the form of invention illustrated the bed 20 is shown as formed with an upstanding bracket 28 rotatably supporting adjusting screw 29 bearing pilot wheel 30. This screw is engaged in the swivel sleeve 31 carried by unit 25 with the result that rotation of the screw will impart in and out movement to the unit 25 either with respect to the slide 22 in the event that slide 22 is clamped to the bed or carrying with it slide 22 in the event that the regulating wheel unit is locked to said slide by its clamp 32 and the clamp 23 is released. In normal operation the two slides are locked together as a unit for joint in and out movement.

In addition to the initial position adjustment effectable by rotation of screw 29 an in-feed movement of prescribed amount may be effected by oscillation of sleeve 31 which,

for this purpose, is provided with the elongated actuating handle 33.

This handle also serves for actuation of the work clamping and ejecting mechanism as will be hereinafter described.

It is to be understood that the present machine while not of conventional centerless type operates in accordance with the basic principles normally utilized in conjunction with such machines. It is particularly adapted for the grinding of the head portions of articles such as the mushroom type valve customarily employed in internal combustion engines. Such a work piece is shown in the drawings comprising a stem or shank portion 34 and head 35 which latter is designed to have produced thereon the seating face 36. In the use of such an article the stem is the determining factor as to ultimate position of the valve since the stem slides in an elongated guide sleeve or the like of the engine. It is therefore desirable first to form the stem as by grinding in a centerless grinder to determine its ultimate cylindrical form and axis. The stem having been so formed it may then desirably be mounted on an angle top work rest blade 37 carried by a bracket 38 on slide 22 and the regulating wheel unit 25 adjusted in proper position to engage the work piece on rest 37 when the two slides are locked together in unitary relationship. To retain the work in position in the machine use is made of suitable work clamping members such as the rollers 39 shown in the drawings, said rollers being carried on a spindle 40 in a self-aligning bearing 41 supported on an arm 42, for insuring uniformity of roller pressure on the work.

To provide means whereby the machine may be used to operate on work pieces having a different size stem as respects the diameter, the arm 42 is adjustably affixed to a supporting arm 43 projecting up from an oscillatable shaft 44 which passes through and is journaled in work rest bracket 38. The arm and its rollers are positively forced into work clamping position by cam 49 on sleeve 89 acting through roller 48 and bell crank lever 47 coupled with rock arm 43 by screw 47′. An arm 45 adjustably affixed to shaft 44 has a spring 46 affixed to the bracket, as best shown in Figure 5, and tends to oscillate the rollers 39 away from the stem 34. It will thus be seen that when the rollers 39 are in engagement with the work, the work is positively urged downward into the trough between the work rest blade and the regulating wheel and held in intimate contact with the regulating wheel while the upward movement of the regulating wheel with respect to the work rest will impart a proper and controlled rotation to the work.

In order that the work pieces may be uniform in length from the tappet engaging end of the valve to the face of the valve seat the bracket 38 is further provided with guide portions 50 for the combined stop and ejector rod 51 whose ultimate movement in one direction may be suitably limited as by inter-engagement of the actuating block 52 thereon with the adjustable stop screw 53 in guide portion 50. When work pieces having a different size stem as respects to length are to be operated on, stop screw 53 may be adjusted accordingly. A rock lever 54 pivoted as at 55, when operated by a reciprocating plunger 60, acts to move the tooth 56 against pawl 57 on the block in a right hand direction, as viewed on Figure 3, while a compression spring 58, acting against a collar 59 on the end of rod 51 tends to urge the rod into a stop position. It will be understood that movement of plunger 60 to the left will move the rod 51 to move a work piece outward or in an axial direction off the supporting rest, and that at about the position shown in Figure 6, pawl 57 will slip off tooth 56, allowing spring 58 to retract rod 51. When tooth 56 is returned to its initial position by the retraction of plunger 60, it rides over pawl 57 which pivots to allow it to pass by, and pawl 57 is returned to its upright actuatable position by its spring in block 52.

In order that the work may be retained during grinding in proper position in contact with the stop rod 51 use is made of a work head contacting roller 61, which is carried on an axle 90 horizontally adjustable in the stem 91. Stem 91 is vertically adjustable in arm 62, which arm has a universal pivotal support 63 on bracket 38. By this means, the roller may be adjusted for work heads of different diameters. A spring 64 adjustably secured as at 65 urges the lower end of arm 62 outwardly to move the roller 61 in a diagonal direction inward toward the work head, the direction of movement of arm 62 being guided by a finger thereon having a roller 66 engaging a fixed cam 67. Another finger 68 on the arm 62 has a roller 69 positively actuatable by an oscillating cam 70 for pivoting arm 62 away from the work head when it is desired to permit the completed work piece to be removed from the machine. When the work is in position on the work rest, rollers 39 act in opposition to and in conjunction with the work rest blade and regulating wheel to rotatably support the work and at the same time it is urged toward the ejector stop by the roller 61. It is then in the same position as when the stem thereof was being ground in a centerless grinder and the axial relationship of the work to the machine is determined by the engament of the regulating wheel and work rest therewith and independent of the use of variable clamping jaws, rotatable chucks or collets depending

on accuracy of their supporting bearings or other like structures. Consequently the work is most accurately supported for rotation about a definite and unvarying axis eliminating to a maximum errors introducable by mechanical connections or supports thereof. It can then to advantage have the head portion thereof ground in accurate concentric relation to the preformed cylindrical stem surface.

For the performance of this grinding there is preferably affixed to the bed a slide or carrier 71 bearing the grinding wheel spindle 72 driven from a suitable source of power at a grinding rate of speed in a clockwise direction and having mounted on its inner end the cup grinding wheel 73. The spindle 72 is provided with the self-contained oscillator unit 74 for imparting a slight axial reciprocation to the spindle and wheel carried thereby. On account of the arrangement of parts it will be particularly noted by reference to Figure 2 of the drawings that the grinding wheel spindle is held in diagonal relationship to the bed of the machine as an entirety and that while the movement of the regulating wheel slide and work supporting mechanism is parallel with the bed the oscillation of the grinding wheel is diagonally related to such feeding movement. The grinding wheel has been shown as formed with a lateral operative surface as at 75 substantially parallel with the axis of the wheel and in the present instance so disposed as to form substantially a forty-five degree bevel on the head 35 of the valve. In this relationship of parts the reciprocation of the grinding wheel spindle will cause the operative face of the grinding wheel to have a linear traverse over the work tending to exert a self-truing effect on the wheel surface and to prevent the formation of scratches or the like by re-current engagement of grinding wheel and work. It will further be noted on account of the relationship of parts that the cutting action of the grinding wheel is diagonally exerted against the face being ground eliminating the tendency to formation of circumferential scratches or the like by imperfections on the wheel. It will additionally be noted that the action of the wheel is on the outer unsupported portion of the work with the result that the pressure of the retaining rollers 39 must be sufficient to positively hold and steady the stem of the valve.

When the grinding has been completed there are a number of operations to be simultaneously effected. These include a relative separation of the work and the grinding wheel, a release of the lateral pressure members and a shifting of the valve head engaging roller into such position that the work may be axially removed without contact therewith. These several operations in the machine sown are advantageously accomplished by a single movement of the lever 33 in a direction away from the operator. As the lever is so shifted it serves to oscillate sleeve 31 thus retracting the regulating wheel unit and associated parts as respects the grinding wheel. During the initial portion of this movement, the pin 76 on lever 33 has been moving idly in notch or recess 77 of slide rod 78. This slide rod has a ratchet portion 79 for cooperation with the pinion 80 on the oscillating actuation shaft 81 for actuation thereof.

On the other end of shaft 81 are an arm 82 and an adjustably affixed crank 83. The arm has a pin 84 riding up and down in a slot 85 in a block 86 on the end of reciprocating plunger 60, while the crank 83 has a link 87 connected to an arm 88 fixed on an oscillating sleeve 89 in which plunger 60 is journaled, which sleeve operates the cams 49 and 70 aforesaid.

Continued shifting of lever 33 moves slide rod 78 toward the position shown in Figure 10, and oscillates shaft 81 with arm 82 and crank 83 in a counterclockwise direction from the position shown in Figure 3. The motion of the crank causes link 87 through arm 88 to oscillate sleeve 89 thereby actuating cams 49 and 70 simultaneously. Cam 70 acts against roller 69 causing arm 62 to carry roller 61 laterally out of contact and alignment with the work piece head 36 against the pressure of spring 64. During this movement roller 69 riding on fixed cam 67 swings arm 62 forwardly. Meantime cam 49 releases roller 48 permitting shaft 44 to be oscillated by its spring 46 to move rollers 39 out of contact with the stem 34 of the work piece, and the work piece is thus released and is ready to be ejected.

Oscillation of arm 82 serves to move plunger 60 to the left, as viewed in Figure 3 causing tooth 56 to swing through an arc from the position shown in Figure 3 into contact with pawl 57 on block 52. While the tooth travels through this arc, the cams 49 and 70 will oscillate sufficiently to move the rollers 39 and 61 out of contact with the work piece. Continued oscillation of these cams will be ineffective so far as additional actuation is considered, but will merely hold the rollers in released position while the continued movement of the tooth as caused by the plunger will cause the work piece ejecting rod 51 to move to the right and eject the work piece as tooth 57 moves beyond contact with pawl 56 just as lever 33 reaches its most advanced position, and spring 58 is free to immediately return rod 51 to its left or stop position. When this is done, it is merely necessary for the operator to insert a new work piece and reverse the shifting lever to its original position when the work will be automatically

clamped in proper position and then advanced into engagement with the grinding wheel.

It will thus be seen that there has been provided an improved automatic work retaining and releasing means for positively laterally urging and clamping the stem of a work piece in rotary engagement with a regulating wheel for controlling the rotation of the work piece and axially urging the same against a definite and adjustable stop in the direction of the grinding wheel operating on a portion of the work piece distant from the regulating wheel.

It will be further noted that the axial tension of the work piece is preferably by resilient or yielding means allowing the work piece to automatically adjust itself axially in position within the machine and preventing jam or breakage of parts in case the work piece is over-size as respects to length.

In addition it will be noted that the several work engaging members are all adjustable that the machine may be readily and easily adapted to operate on work pieces of a different size, and that the members are so inter-connected with the feed control mechanism of the machine as to properly engage and hold the work during the feeding movement and to automatically release and discharge the work on relative separation of the work and the grinding member.

It is to be understood that it is desirable in the formation of the valve seat that this surface be suitably urged in the direction of the angularly related operative face of the grinding wheel. At the same time it is desirable that the means holding the work in this direction be an impositive one which will accommodate itself to variations in length of stem or initial variations in condition of the seat to be ground involving removal of greater or less amount of material.

The proper impositive urge of the work piece may therefore be effected either through the use of a spring pressed member such as the roller 61, by tilting of the regulating wheel in such manner that it will exert a feed thrust or component urging the work stem against the ejector stop 51, which relationship of parts is particularly illustrated in Figure 6, or by a combination of these features.

It will therefore be understood that where the term "means exerting an impositive urge on the work" has been employed that various equivalent mechanisms such as yieldably actuated rollers, angled control wheel or the like may be considered as jointly and severally referred to thereby.

What is claimed is:

1. A grinding machine, including a grinding wheel and a regulating wheel, means holding the work laterally against the regulating wheel, ejector stop mechanism for holding the work axially toward the regulating wheel, a rock arm to successively engage, actuate and disengage the ejector mechanism on movement in a work ejecting direction, means for returning the ejector to work stop position on such disengagement, and adjustable means for variably limiting the stop position of said ejector.

2. A grinding machine, including a grinding wheel and a regulating wheel, said regulating wheel being retractable from the grinding wheel by an actuatable lever, an oscillatable shaft, and means shiftable by said oscillatable shaft for positively locking the work piece against lateral displacement and impositively securing the same against axial displacement.

3. A grinding machine, including a grinding wheel and a regulating wheel, said regulating wheel being retractable from the grinding wheel by an actuatable lever, an oscillatable shaft, means shiftable by said oscillatable shaft for positively locking the work piece against lateral displacement and impositively securing the same against axial displacement and adjustable means for varying the impositive urge of the work piece in an axial direction.

4. A grinding machine including a grinding wheel and a regulating wheel, said regulating wheel being retractable from the grinding wheel by an actuatable lever, an oscillatable shaft, said shaft being oscillatable by said lever, means shiftable by said oscillatable shaft for positively locking the work piece against lateral displacement and impositively securing the same against axial displacement from said regulating wheel, an ejector stop mechanism, a rock arm shiftable by said oscillatable shaft to successively engage, actuate and disengage the ejector mechanism on movement in one direction and adjustable means for variably limiting the stop position of the ejector stop in the other direction.

5. A grinding machine including a grinding wheel and a regulating wheel, an oscillatable shaft, positive means for clamping the work shiftable by said oscillatable shaft, and work stop ejector mechanism operable by said oscillatable shaft, said mechanism including an oscillatable actuating arm, an ejector, and a yieldable detent carried by the ejector projecting into the path of movement of the actuator arm whereby the arm will positively shift the ejector in one direction and will ride by the detent on movement in the opposite direction.

6. A grinding machine including a grinding wheel and a regulating wheel, an oscillatable shaft, an oscillatable sleeve operative by said shaft for positively clamping the work laterally against the regulating

wheel and for impositively holding the work axially of the regulating wheel, a reciprocating plunger within said sleeve operative by said oscillatable shaft, an ejector mechanism, said ejector mechanism being operative by said reciprocating plunger.

7. A grinding machine including a grinding wheel and a regulating wheel, an oscillatable shaft, an oscillatable sleeve operative by said shaft, cam means operative by said sleeve for clamping and releasing a work piece, a reciprocating plunger within said sleeve, said plunger being reciprocatable by said shaft, an ejector stop mechanism, and a rock arm movable by said plunger to successively engage, actuate and disengage the ejector mechanism on movement in one direction when the work piece has been released.

8. A grinding machine including a grinding wheel and a regulating wheel, said regulating wheel being retractable from said grinding wheel by an actuatable lever, an oscillatable shaft operative by said lever, an oscillatable sleeve operative by said shaft for laterally and axially holding and releasing a work piece in operative position, a plunger reciprocable within said sleeve by said shaft, a work stop and ejector mechanism, a rock arm operative by said plunger to successively engage, actuate and disengage the ejector mechanism on movement in one direction, and adjustable means for variably limiting the stop position of the ejector mechanism in the opposite direction.

9. A grinding machine including a grinding wheel and a regulating wheel said regulating wheel being retractable from said grinding wheel by an actuatable lever, an oscillatable shaft operative by said lever, an oscillatable sleeve operative by said shaft, means actuatable by said sleeve for holding the work laterally in positive engagement with the regulating wheel and for releasing the lateral engagement, means actuatable by said sleeve for axially holding the work impositively toward the regulating wheel and for releasing said axial engagement, a plunger reciprocable within said sleeve by said shaft, a work stop and ejector mechanism, means operative by said plunger when the work is laterally and axially released to successively engage, actuate and disengage the ejector mechanism for movement in a work ejecting direction, means for returning the ejector to a stop position on such disengagement and adjustable means for variably limiting the stop position of the ejector in the opposite direction.

10. A machine of the character described including a bracket, a work rest and a regulating wheel disposed adjacent thereto, means for laterally urging the work towards the regulating wheel comprising a pair of rollers for engagement with the periphery of the stem of the work, a spindle for said rollers rotating in a self-aligning bearing, an adjustable arm carrying said bearing, an oscillatable shaft journaled in the bracket supporting said arm, a bell crank attached to said arm, cam means actuating said crank to positively urge the arm toward the work and resilient means tending to oscillate the shaft to retract the arm from the work and disengage the rollers therefrom and means laterally displaced as respects said regulating wheel for grinding a projecting portion of the work.

11. A grinding machine of the character described including a bracket, a work rest and a regulating wheel disposed adjacent thereto, means for laterally urging the work positively toward the regulating wheel, additional means for axially urging the work toward the regulating wheel comprising a work head contacting roller, an axle therefor, a stem adjustably carrying said axle, an arm universally pivoted in said bracket adjustably supporting said stem fixed cam means on said bracket, a finger on said arm guided by said cam means, a second finger fixed on said arm, an oscillating cam for actuating said second finger to move the work head contacting roller diagonally away from the work head and adjustable resilient means urging the arm to move the roller toward the work head, and means laterally displaced as respects said regulating wheel for grinding a projecting portion of the work.

12. A machine of the character described including a bracket, a work rest and a regulating wheel disposed adjacent thereto, adjustable means for laterally urging the work positively toward the regulating wheel, additional adjustable means for axially urging the work on the work rest, a grinding wheel, means for imparting a relative feeding and retractive movement to the work supporting mechanism and grinding wheel, and means for automatically releasing and ejecting a work piece on the relative retractive movement of the parts comprising an oscillatable shaft, a crank adjustably affixed on said shaft, a sleeve journaled in the bracket oscillatable by said crank, cam means actuated by said sleeve for causing the lateral and axial work urging means to retract, an arm on said oscillatable shaft, a reciprocating plunger journaled in said sleeve and actuated by said arm. A rock lever actuated by said plunger, a tooth oscillated by said rock lever, a work stop rod bearing a pawl in the path of oscillation of said tooth to actuate said rod in the work ejecting direction, resilient means retracting said rod to stop position and adjustable means fixing the retractive limit of said rod, said cam means also serving to hold the lateral and axial work urging means in retracted position during the ejecting and retracting action of the rod.

13. A machine for the grinding of a headed work piece including a work rest for lateral engagement with the periphery of the stem portion of the work piece, a regulating wheel adjacent the work rest for progressive peripheral engagement with the work piece stem, self-aligning adjustable roller means for pressing the stem on the rest into positive engagement with the regulating wheel, adjustable resilient means tending to retract said roller means from said stem, an adjustable work head engaging roller, adjustable resilient means for imparting an axial component of movement to said work head engaging roller toward the work piece, a cam guide for adding a lateral component of movement to said head roller and an oscillating cam for positively retracting the head roller laterally and axially as respects the work head and for permitting the head roller to resiliently engage with the same.

14. A machine for the grinding of a headed work piece including a work rest for lateral engagement with the periphery of the stem portion of the work piece, a regulating wheel adjacent the work rest for progressive peripheral engagement with the work piece stem, adjustable roller means for pressing the stem on the rest into engagement with the regulating wheel, adjustable resilient means tending to retract said roller means from said stem, an oscillating cam for positively actuating the roller means against the action of said resilient means, an adjustable work head engaging roller, adjustable resilient means for imparting an axial component of movement to said head roller toward the work piece, a cam guide for adding a lateral component of movement to said head roller, an oscillating cam for positively retracting the head roller laterally and axially as respects the work head and for permitting the head roler to resiliently engage with the same, and a common oscillating shaft operating both said oscillating cams.

15. A machine for the grinding of a headed work piece including a work rest for lateral engagement with the periphery of the stem portion of the work piece, a regulating wheel adjacent the work rest for progressive peripheral engagement with the work piece stem, adjustable roller means for pressing the stem on the rest into engagement with the regulating wheel, adjustable resilient means tending to retract said roller means from said stem, an oscillating cam for positively actuating the roller means against the action of said resilient means, an adjustable work head engaging roller, adjustable resilient means for imparting an axial component of movement to said head roller toward the work piece, a cam guide for adding a lateral component of movement to said head roller, an oscillating cam for positively retracting the head roller laterally and axially as respects the work head and for permitting the head roller to resiliently engage with the same, a common oscillating sleeve operating both said oscillating cams, an adjustable stop and ejecting rod terminally engaging the work piece, a plunger for actuating said rod to eject the work piece when the head and stem engaging rollers are disengaged therefrom, said plunger being reciprocable within said sleeve, an actuating shaft for said sleeve and said plunger, means connecting said shaft and said sleeve, and means connecting said shaft and said plunger, one of said connecting means being adjustable.

16. A grinding machine including a grinding wheel and a regulating wheel, said regulating wheel being retractable from the grinding wheel, an actuating lever for effecting said retraction of the regulating wheel, an oscillatable shaft, means actuated by said shaft for positively clamping work laterally against the grinding wheel and for impositively axially urging said work transversely of the regulating wheel, said means being operative to unclamp and release the work on actuation of the lever to retract the regulating wheel from the grinding wheel.

17. A grinding machine including a grinding wheel and a regulating wheel, said regulating wheel being retractable from the grinding wheel, an actuating lever for effecting said retraction of the regulating wheel, an oscillatable shaft, means actuable by said shaft for positively clamping the work laterally against the grinding wheel, means actuable by said shaft for impositively axially urging the work transversely of the regulating wheel, and means shiftable by said shaft for ejecting the work, said shiftable means being operative to release and eject the work on actuation of the lever to retract the grinding wheel from the regulating wheel.

18. A grinding machine including a grinding wheel and a regulating wheel, means holding work laterally against the regulating wheel, an ejector stop mechanism for axially positioning the work transversely of the regulating wheel, a rocker arm for successively engaging, actuating and disengaging the ejector mechanism while traveling in one direction, and means for returning the ejector to work limiting position upon such disengagement.

In testimony whereof I affix my signature.

CLEMENT BOOTH.