Jan. 26, 1943. J. A. BORDEN 2,309,093

APPARATUS FOR DISPENSING AND HEMMING ADHESIVE TAPE

Filed May 4, 1939. 2 Sheets-Sheet 1

Fig. 1.

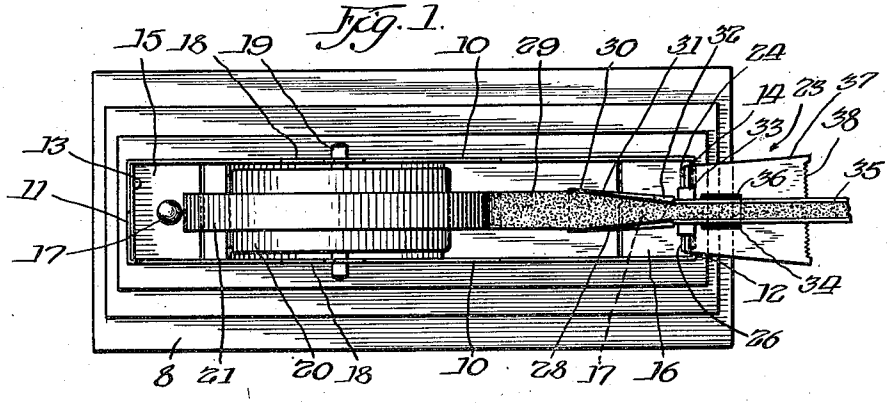

Fig. 2.

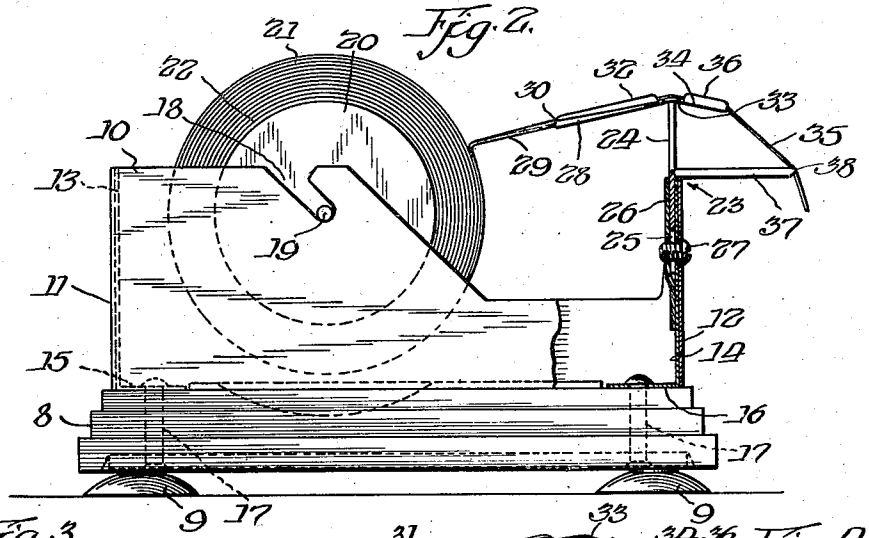

Fig. 3.

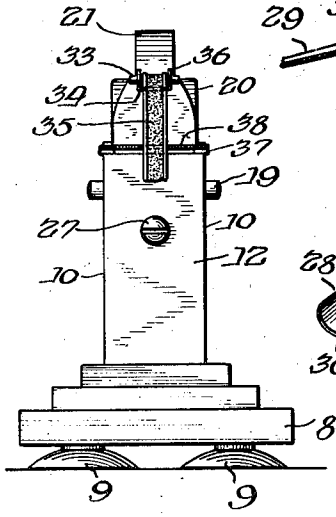

Fig. 4.

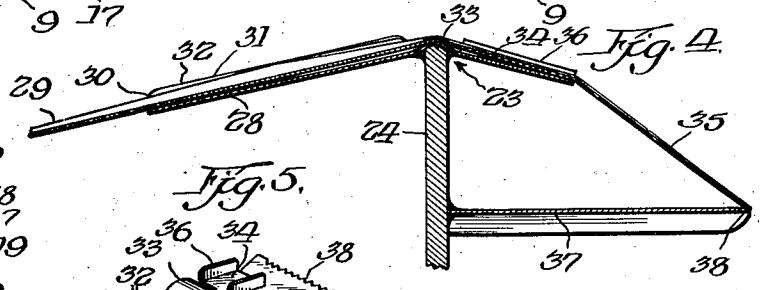

Fig. 5.

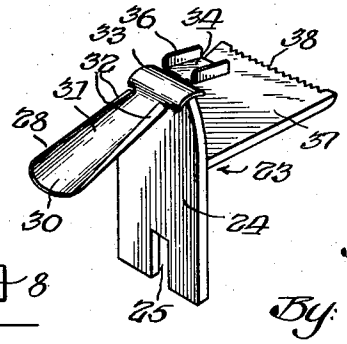

Inventor:
John A. Borden:
By: Paul Carpenter
Atty.

Jan. 26, 1943. J. A. BORDEN 2,309,093

APPARATUS FOR DISPENSING AND HEMMING ADHESIVE TAPE

Filed May 4, 1939 2 Sheets-Sheet 2

Fig. 6

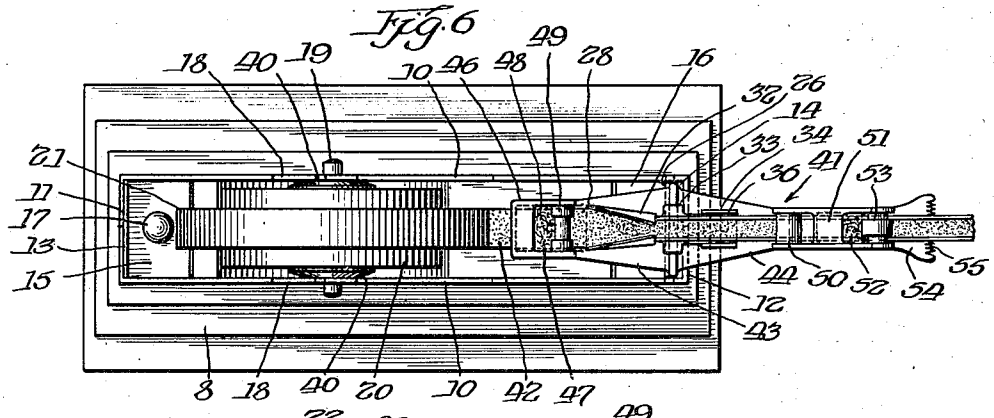

Fig. 7.

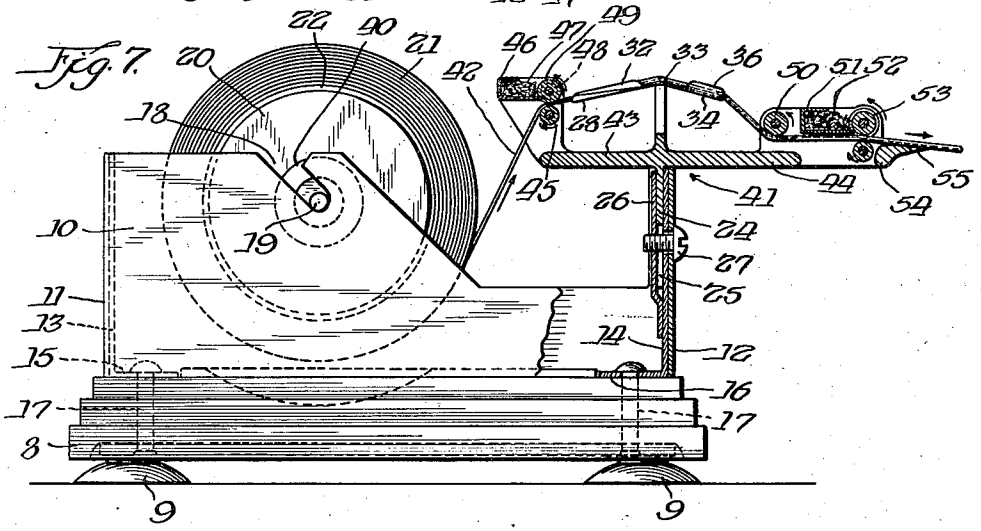

Fig. 8.

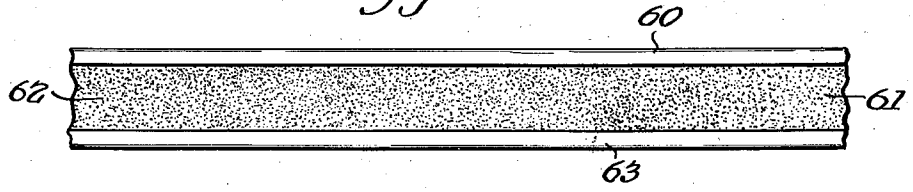

Fig. 9.

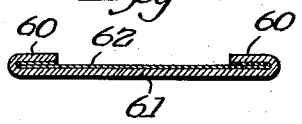

Inventor:
John A. Borden:

By: Paul Carpenter
Atty:

Patented Jan. 26, 1943 2,309,093

UNITED STATES PATENT OFFICE

2,309,093

APPARATUS FOR DISPENSING AND HEMMING ADHESIVE TAPE

John A. Borden, St. Paul, Minn., assignor to Minnesota Mining & Manufacturing Company, St. Paul, Minn., a corporation of Delaware

Application May 4, 1939, Serial No. 271,809

10 Claims. (Cl. 270—93)

This invention relates broadly to apparatus for dispensing adhesive tape from a roll in usable condition and in desired lengths, and more particularly to apparatus adapted to place a fold or hem in a strip of adhesive tape as it is being dispensed and before it is cut to the desired length.

The invention is of considerable utility in dispensing, hemming and/or folding adhesive tape having a fabric or paper backing and provided with a solvent activated adhesive, that is, an adhesive adapted to be activated to a tacky condition by the application of water or any other suitable fluid, or a pressure-sensitive adhesive, i. e., an adhesive of a normally tacky nature, which does not require moistening with water or other solvents to activate it to adhesiveness, such tapes, for example, as the ordinary surgeon's tape and such tapes as are disclosed in U. S. Patent No. 1,760,820 to Richard G. Drew. The invention is of particular utility in dispensing tapes provided with non-fibrous backings such as "Cellophane" or other cellulose derivatives, in that tapes having backings formed of certain cellulose derivatives are susceptible to tearing when their edges are nicked or when they are placed under a severe strain.

A primary object of the invention is to provide apparatus particularly adapted to dispense adhesive tapes of the types described and to form a reinforced edge or edges on the strip of tape during the dispensing operation by folding one or both edges of the strip to form a hem or hems adapted to reinforce the strip and protect it against tearing when its edges are nicked or when it is subjected to an unusually severe strain.

A further object of the invention is the provision of apparatus of the type described which can be produced readily and economically and is of such construction that rolls of tape can readily be inserted therein and the cores of spent rolls can be easily removed; the provision of apparatus of the type described equipped with severing means also adapted to retain the free end of the hemmed tape in a convenient position for removal of the following portion of the strip without spoiling a portion of the tape due to undesired folding or creasing thereof; the provision of apparatus adapted readily to form a hem of uniform width on both edges of an adhesive tape strip; the provision of apparatus of the type described which can readily be employed by an unskilled operator to form hems in adhesive tape; and the provision of apparatus for forming a fold or hem in adhesive tape as it is being dispensed from a roll and before it is cut to the desired length.

The invention further contemplates the provision of an attachment adapted to form a hem or fold in one or both edges of pressure-sensitive adhesive tape that may replace the cutting edge portion of adhesive tape dispensers known to the art, for example, such tape dispensers as are disclosed in my copending application, Ser. No. 93,661, filed July 31, 1936.

In general, my improved tape dispensing and hem-forming device comprises a drum adapted to removably retain a roll of adhesive tape, drum supporting structure and a member mounted on this structure in advance of the drum and adapted to form a hem in the strip of adhesive tape withdrawn from the roll; the hem-forming member being equipped with a throat portion having upturned converging flanges adapted to form folds along the edges of the tape, a saddle-like portion upon which the folded edges are adhesively secured to the body portion of the tape as it is drawn through a downwardly extending guideway, and a tear-off edge in advance of and below the guideway. As previously mentioned, the invention includes embodiments adapted to form hems on solvent-activated adhesive tape and pressure-sensitive adhesive tape.

The invention will be readily understood from the following detailed description in conjunction with the accompanying drawings in which preferred embodiments of the invention are shown and in which:

Fig. 1 is a top plan view of the embodiment of the invention adapted for use with pressure-sensitive adhesive tape;

Fig. 2, a side elevation view, partly in section, of the embodiment of Fig. 1;

Fig. 3, a front end elevation;

Fig. 4, an enlarged vertical sectional view of the hem forming member of the device;

Fig. 5, an enlarged view in perspective of the hem forming and severing member;

Fig. 6, a top plan view of an embodiment adapted for use with a solvent activated adhesive tape;

Fig. 7, a side elevation, partly in section, of the embodiment of Fig. 6;

Fig. 8, an enlarged plan view of a strip of hemmed adhesive tape; and

Fig. 9, a cross section of a strip of the hemmed adhesive tape, further enlarged.

Referring to the drawings and to both embodiments of the invention shown therein, the reference character 8 indicates a base portion, pref-

erably formed of a casting of iron or other metal, to provide a member having considerable weight. The base member is provided with a plurality of, conveniently four, rubber suction cups 9 suitably fastened thereto in any convenient fashion as by lug screws. Thus, due to the weight of the base and the suction cups, a structure is provided that is adapted to resist the drag resulting from the pull upon the tape as it is drawn through the dispensing and hem-forming members of the device and yet may be conveniently moved from place to place as desired.

The roll supporting structure mounted upon the base 8 comprises two side walls 10 which are bent at their ends to form end walls 11 and 12 at the rear and front end thereof, respectively, and which are mounted upon the base in spaced parallel relationship by means of angularly bent members 13 and 14 to which the end portions 11 and 12 are respectively secured by any convenient means such as spot welding. The members 13 and 14 have angularly bent horizontal portions 15 and 16, respectively, which are fastened to the base member 8 in any suitable fashion, such as by rivets or bolts 17, as shown in Fig. 2. The side walls 10 and supporting members 13 and 14 are preferably stamped from sheet metal.

The side wall members 10 are provided with downwardly extending inclined notches 18 adapted to receive the projecting ends of the shaft 19 of the drum 20. The drum is adapted to removably receive a roll 21 of adhesive tape to be dispensed. The roll of tape is wound upon a core 22 adapted to fit snugly upon the drum 20. The drum 20 is preferably made of sheet metal forming a closed cylinder of a width which can conveniently be accommodated between the spaced walls 10 to permit free rotation of the drum and its shaft 19 in the notches 18.

Referring to the side wall members 10, as shown in Fig. 2 these members are cut downwardly in advance of the spindle notches 18 to afford ready access to the free end of the tape, whether it be secured to the roll or is threaded through the hem forming member to be described.

The hem-forming and tape-severing elements, generally indicated by the reference character 23, are clearly shown in Figs. 4 and 5, in respect to the embodiment dispensing pressure-sensitive adhesive tape, and in Figs. 6 and 7 of the embodiment for solvent activated tape, and preferably form a unitary construction which may be stamped or die-cast from sheet steel. This structure is provided with a shank member 24 equipped at its lower portion with a slot 25 and is adapted to be removably retained in advance of the roll 21 of tape upon the front wall 12 and supporting member 14. The shank 24 is removably supported thereon by means of a clamping member 26 equipped with a hole threaded to receive a screw 27 which passes through complemental perforations in the members 12 and 14 and through the slot 25 provided in the shank 24. It will thus be seen that the hem forming member 23 may be readily attached to and removed from its supporting members 26 and 14, and if it is not desired to form hemmed tape, a tape severing and retaining member carried on a shank, such structure as is known to the art, for example, as is disclosed in my copending application previously referred to, may be employed in lieu of the member 23 by securing it to the supporting member 14 by means of the clamp member 26.

Referring particularly to Figs. 1–5 illustrating the embodiment for hemming pressure-sensitive adhesive tape, the upper end of the shank 24 is provided with a rearwardly extending throat portion 28 adapted to receive the strip 29 of adhesive tape as it is drawn from the roll 21. The mouth 30 of the throat member is preferably slightly wider than the adhesive tape to be drawn therethrough, and the central channel portion 31 of the throat portion forms a pathway for the strip, tapers inwardly from the mouth 30 and is somewhat dished or concave in outline. As clearly shown in Fig. 5, the edges of the throat member 28 are provided with upwardly extending flanges 32 which are progressively inclined inwardly and are of progressively greater width away from the mouth 30, and, correspondingly, the channel portion 31 decreases in width. Accordingly, it will be seen that the throat portion is adapted to turn the edges of the strip of adhesive tape upwardly and inwardly toward the center of the strip as it is drawn therethrough.

Adjacent the terminus of the throat portion, and preferably mounted at the top of shank 24, is a curved ridge member 33 forming a hump over which the tape must pass as it emerges from the throat member. As shown in Figs. 2 and 5, the throat member slopes downwardly away from the ridge member 33, and on the opposite side of the ridge member a channel-shaped member 34 of substantially the width of the hemmed tape 35 and equipped with upwardly extending flanges 36 inclines downwardly away from the ridge. Thus it will be understood that as the strip of adhesive tape passes over the ridge member it is subjected to a downward pull at an angle to the length of tape (in addition to the strain on the tape longitudinally), which draws the upwardly and inwardly turned edges of the strip which are coated with adhesive on their inner sides, into contact with the adhesive coated central portion of the strip and secures the edges thereto, forming permanent hems.

The tape severing portion preferably comprises a metallic strip 37 which is firmly attached, as by spot-welding, to the shank 24 at a central part thereof and extends at substantially a right angle thereto beyond and below the end of the channel-shaped guideway 34. The end of the strip 37 is provided with a tape severing edge 38 which may be a cutting, knifelike edge or, as shown in Fig. 5, is formed of a plurality of sharp points or teeth. The free end of the severed tape may be retained on the serrated edge 38, and the space between the end of the guideway 34 and the severing edge 38 readily enables the operator to manually grasp the portion of the tape between these members when it is desired to draw another strip through the hemming and dispensing device.

In operation, it will be seen that the roll 21 is mounted upon the drum 20 which is then placed within the side walls 10 of the dispensing structure, where its shaft 19 is supported in the notches 18 of the side walls. The free end of the tape is then manually threaded through the constricted area of the throat member 28 of the hem forming apparatus and is drawn over the ridge member 33 and the guide 34. The tape, indicated by reference character 29, is drawn away from the roll 21 with its adhesive coated surface facing upwardly and, as shown in Fig. 2, pulls away from the roll at substantially a uniform angle, due to the adhesion between the pressure-sensitive adhesive coated side of the tape and the back of the underlying layer in the roll.

As the tape passes through the constricted sec-

tion of the throat member 28, the edges of the tape are turned upwardly and inwardly by the flanges 32. Upon passing over the ridge member 33 the upturned edges of the tape are subjected to a downward tension due to the incline of the guideway, as previously explained, and the adhesive coated surfaces of the edges are brought into contact with the adhesive coated surface of the adjacent marginal portions of the tape, forming a secure bond and permanently hemmed edges. The elevation of the guideway 34 is such that the normal path of the hemmed strip 35 is above the severing edge 38. When it is desired to sever a portion of the strip of hemmed tape it is drawn downwardly across the serrated edge 38. The free end of the tape remains secured to the severing edge where it can be conveniently grasped when another portion of hemmed tape is to be removed. Subsequent portions of hemmed tape are successively removed by grasping the portion 35 between the severing edge 38 and the guideway 36, lifting the tape slightly, drawing it through the hem forming structure by pulling upon the free end of the tape and severing the desired portion. A strip of the hemmed tape comprising a central portion 61 having an exposed adhesive surface 62 and hemmed edges 60 is shown in Figs. 8 and 9.

A modified form of the invention adapted to form a hem on solvent activated adhesive tape is shown in Figs. 6 and 7. The roll supporting structure, as shown, is similar to that shown in Figs. 1 and 2, except that the shaft 19 may be provided with a spring disk 40 to tension the roll, as shown in Fig. 6, since the adhesive on the tape 21 of the roll is not in a tacky condition.

The hem-forming attachment 41 is likewise somewhat similar to the attachment 23 previously described, in that it is provided with a slotted shank 24 adapted to be removably retained in advance of the roll 21 between the front wall 12 and a clamping member 26. It will thus be seen that the hem-forming attachment 41 for solvent activated adhesive tape may be readily substituted for the attachment 23 adapted to form hems on a pressure-sensitive adhesive tape, or for a tape severing and retaining member such as is disclosed in my copending application previously referred to.

The attachment 41 is likewise similar to the attachment 23 in that it is provided with a rearwardly extending throat portion 28 adapted to receive a strip of adhesive tape 42 from the roll 21; the edges of the throat portion being provided with upwardly extending flanges 32 adapted to turn the edges of the strip of adhesive tape upwardly and inwardly toward the center of the strip as it is drawn therethrough. Likewise, after emerging from the throat portion 28 the tape passes over a curved ridge member 33 and is then inclined downwardly through a channel-shaped guide 34.

Unlike the hem-forming attachment 23, the member 41 is provided with a pair of arms 43 and 44 extending horizontally rearwardly and forwardly, respectively, from an intermediate portion of the shank 24. Mounted upon the arm 43 are a tension roller 45, over which the strip of tape passes as it leaves the roll 20, and a moistener containing a solvent adapted to activate the adhesive. As shown in Figs. 5 and 6, the moistener comprises a container 46, housing a sponge 47 or pad saturated with a suitable solvent for the adhesive, and a roller 48 in juxtaposition to the sponge adapted to transmit the solvent to the adhesive on the upper surface of the tape. As shown in Fig. 6, the roller 48 is provided with offset end portions 49 contacting the edges of the adhesive tape strip, so that the solvent is only applied to the edge portions of the tape that form the hem.

The horizontal arm 44 is provided with a tensioning roller 50 in advance of and below the guideway 36, a moistening device comprising a container 51 for a solvent saturated sponge 52, and a roller 53 in juxtaposition to the sponge adapted to transmit the solvent to the center portion of the hemmed tape. A member 54 provided with a severing edge 55 is disposed on the arm 44 in advance of the moistening device.

In operation of the embodiment shown in Figs 5 and 6 it will be seen that the strip of tape 42 as it is drawn from the roll 21 under tension provided by the spring disk 40 passes over the tension roller 45 and under the moistening device where the solvent, which may be water, depending upon the type of the adhesive employed, is applied to the edge portions of the adhesive coated tape strip before it enters the throat portion 28 where the edges of the tape strip are turned inwardly and upwardly. Upon passing over the ridge member 33 the upturned edges of the tape are subjected to a downward tension due to the incline of the guideway 36, as previously explained, and the adhesive coated surfaces of the edges are brought into contact with the adhesive coated surface of the adjacent marginal portions of the tape, forming a hem 60 along the edges of the tape strip 61, as shown in Figs. 8 and 9. The hemmed tape then passes under tension roller 60 and the roller 53 which applies solvent to the central unhemmed portion of the tape to activate the adhesive thereon. The hemmed tape may be cut into any desired length by pulling it downwardly upon the severing edge 55.

Other forms of moistening devices adapted to apply a suitable solvent to the upper adhesive coated surface of the tape may be employed, and, if desired, the second moistening device may be eliminated. In the latter instance, the roller 48 of the first moistening device 46 does not have the offset edge portions 49 and is adapted to apply the solvent along the entire width of the adhesive coating. It is preferred, however, to employ two moistening devices, in that otherwise considerable portions of the adhesive tape may have to be discarded, since the portions of the tape remaining in the throat portion 32 and guideway 36 after the preceding strip has been severed, will not have an activated adhesive thereon.

The invention contemplates the provision of hem-forming members 23 of various sizes and shapes which may be readily substituted, one for each other, and inserted in the dispensing structure, as previously described, in order to hem tapes of different widths, to form hems of differing widths, as desired, or to form a hem on only one edge of the tape. As previously pointed out, the width of the mouth 30 of the throat member 28 is substantially the width of the tape being fed into the hem-forming structure, and the width of the constricted section of the throat member at its narrowest point is the width of the hemmed tape. Accordingly, if a larger hem is desired, the constricted section is made narrower and the inwardly and upwardly turned flanges are made wider. The throat member 28, for example, may be adapted for hemming a tape strip

originally one-half inch in width, and with the constricted area and the flanges thereof adapted to turn over an edge one-sixteenth of an inch in width on each side of the strip, there will be formed a finished article three-eighths inches in width with one-sixteenth inch hems, having a central portion of substantially a quarter inch in width with an exposed adhesive surface. As pointed out, hem-forming members of simple construction adapted to form hems of differing widths on one inch or other size tape may be readily inserted and supported between the retaining members 26 and the end wall 12. Furthermore, the throat member may be provided with only a single flange adapted to hem only one edge, leaving the opposite edge unhemmed.

It will thus be seen that I have provided a device that is simple in construction and operation and is adapted to form a permanent hem or hems on a strip of pressure-sensitive or solvent-activated adhesive tape.

Having thus described my invention and illustrated its use, what I claim as new and desire to secure by Letters Patent is:

1. In a device for dispensing adhesive tape, a drum supporting a coil of tape, a frame in which said drum is rotatably mounted, an upright member formed on said frame in advance of said drum, and means including a tapering flange member carried on said upright member adapted to guide tape from the roll through the dispenser and to fold an edge of said tape and to secure it to the body portion of said strip forming a hem therein, said means including a cutting edge adapted to sever said tape.

2. In a dispensing device of the type described, a frame, a roll of adhesive tape rotatably supported on said frame, a standard formed on said frame in advance of said roll, and a hem-forming member detachably carried on said standard, said member comprising a throat portion adapted to receive said tape as it is drawn from said roll, upwardly and inwardly turned flanges on said throat portion adapted to fold the edge portions of said tape as it passes through said throat portion, and a raised portion in advance of said throat portion adapted to adhesively secure said folded edge portions to the unfolded portion of said tape, and a severing edge carried on said member in advance of said ridge portion.

3. In a device of the type described, a frame, a roll of adhesive tape rotatably mounted in said frame and a hem-forming member carried in said frame in advance of said roll, said member comprising a throat portion adapted to receive said tape as it is drawn from said roll, and having a tapering channel, flange members carried on said throat portion adapted to fold over the edge portions of said tape as it passes through said throat portion, a ridge member over which the tape passes as it leaves said throat portion, and a tape guideway inclining downwardly from said ridge portion, said ridge member and said guideway being adapted to adhesively secure the folded edges to the unfolded portion of said tape as it is drawn over the ridge member and through the guideway.

4. In a device of the type described, a frame, a roll of adhesive tape rotatably supported in said frame, a standard on said frame in advance of said roll, and a member adapted to form a hem in said tape, said member comprising a shank portion adapted to be detachably secured to said standard, a throat portion adapted to receive said tape as it is drawn from said roll and equipped with a tapering channel, a flange on said throat portion adapted to fold an edge portion of said tape, a ridge member disposed above said shank portion, a tape guideway inclining downwardly from said ridge member, and a severing edge carried on said shank portion below and in advance of said tape guideway.

5. A device for forming a hem in adhesive tape comprising a throat member adapted to receive a strip of tape and provided with a tapering channel, an upturned flange on said throat member adapted to fold an edge of said tape as it passes through said throat portion, a raised portion over which the tape passes as it leaves said throat portion and adapted to adhesively secure said folded edge to the unfolded portion of said tape, a tape guideway inclined downwardly from said raised portion and a severing edge disposed below and in advance of said guideway.

6. A device for forming a hem in adhesive tape and adapted to be detachably mounted in an adhesive tape dispenser, comprising a shank member, a throat member having a tapering channel adapted to receive a strip of tape, upturned flanges on said throat portion adapted to fold the edge portions of said tape as it is drawn through said throat portion, a ridge member carried on said shank adapted to adhesively secure said folded edge portions to the unfolded portion of said tape as it is drawn thereover, a guideway inclined downwardly from said ridge member, and a severing edge carried on said shank member in advance of and below said guideway.

7. In a device for dispensing solvent-activated adhesive tape, a drum for supporting a roll of tape, a frame in which said drum is rotatably mounted, a moistener in the pathway of said tape as it leaves said roll adapted to apply a solvent to the adhesive coated surface of said tape, and flanged means in advance of said moistener adapted to fold an edge of said tape and to secure it to the body portion of said tape forming a hem thereon as said tape passes through said means.

8. In a device for dispensing solvent-activated adhesive tape, means for rotatably supporting a roll of said tape, a moistener in the pathway of said tape, including a roller adapted to apply a solvent to the edge portions of the adhesive coated surface, a curved tapering member in advance of said moistener adapted to fold over the edges of said tape and to secure said folded edges to the body of said tape to form hems thereon, and a second moistening device adapted to apply a solvent to the exposed adhesive coated surface of said tape.

9. In a dispensing device for strip material coated with a solvent-activated adhesive, a roll of said strip material, a frame adapted to rotatably support said roll, a moistener in the pathway of said strip material including a member adapted to apply to solvent to the adhesive coated surface of the edge portions of said strip material, a guideway on said frame positioned to receive said strip material from said moistener, flange members on said guideway adapted to turn over said edge portions of said strip material and to secure said turned over edge portions to the body of said strip material, a second moistener adapted to apply solvent to the exposed adhesive surface of the body of said strip material, and a member in advance of said second moistener provided with an edge adapted to sever said strip material.

10. In a dispensing device for solvent-activated

adhesive tape, a frame, a roll of said adhesive tape rotatably supported on said frame, a standard formed on said frame in advance of said roll, a hem forming support detachably carried on said standard, a moistener mounted on said support in the pathway of said tape adapted to apply a suitable solvent to the adhesive coated surface of said tape, a member carried on said support, comprising a throat portion adapted to receive said tape from said moistener, upwardly and inwardly turned flanges on said throat portion adapted to fold the edge portions of said tape as it passes through said throat portion, and a ridge portion in advance of said throat portion adapted to adhesively secure said folded edge portions to the unfolded body of said tape, a second moistener carried on said support adapted to apply solvent to the exposed adhesive coated surface of said tape, and a severing member carried on said detachable support in advance of said second mentioned moistener.

JOHN A. BORDEN.