June 14, 1927. 1,632,130

A. HADDOCK

CONDENSER

Filed Dec. 7, 1925

Fig. 1

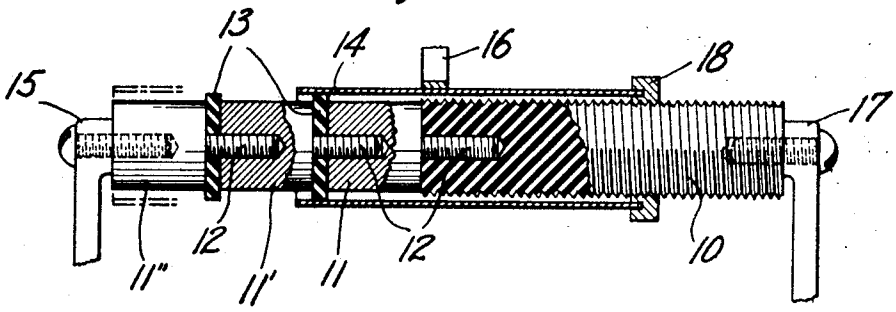

Fig. 2

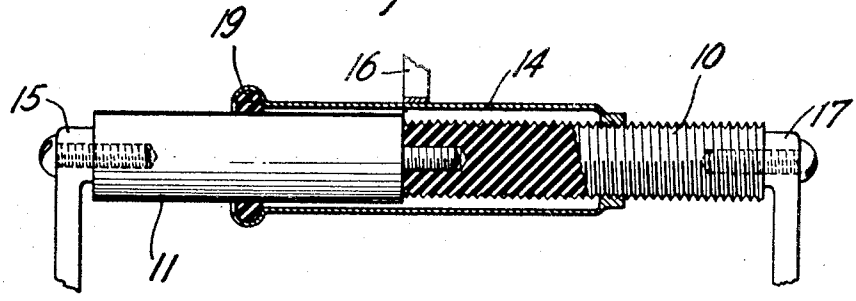

Fig. 3

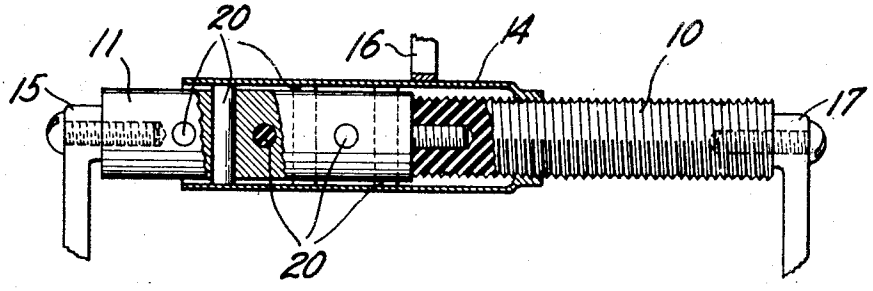

Inventor:
Arthur Haddock
by E. W. Adams Atty.

Patented June 14, 1927. 1,632,130

UNITED STATES PATENT OFFICE.

ARTHUR HADDOCK, OF EAST ORANGE, NEW JERSEY, ASSIGNOR TO BELL TELEPHONE LABORATORIES, INCORPORATED, OF NEW YORK, N. Y., A CORPORATION OF NEW YORK.

CONDENSER.

Application filed December 7, 1925. Serial No. 73,635.

This invention relates to condensers.

An object of the invention is to enable fine adjustments of capacity to be made and to secure very small minimum value of capacity.

A further object is to provide for fine adjustments of capacity in a circuit and to stabilize the value of capacity of an adjustable element.

A feature of the invention is a variable condenser comprising a cylindrical metallic rod and a hollow metallic cylinder supported on insulating rings and adapted to be adjusted along and over said rod.

A further feature relates to a condenser in the form of a small cylinder comprising sections, whereby the size of the condenser may be conveniently adapted to a variety of uses.

A further feature is a condenser including an element comprising alternate conducting and insulating sections and an adjustable plate cooperating therewith which comprises a hollow cylinder movable lengthwise of said sections.

Broadly, the invention comprises a fixed conducting cylinder or rod and an adjustable conducting cylinder adapted to be arranged coaxially. The adjustable cylinder may be movable over and along the fixed cylinder. The cylinders may be provided with suitable insulating supports and in one instance these supports may also be insulating cylinders attached to the conducting cylinders by being threaded thereto or in any other suitable manner. For increasing the capacity range of the condenser, the fixed cylinder may be constructed in sections and the outer adjustable cylinder may be supported on insulating washers held between the cylinder sections and having their edges extending thereabove so as to produce a suitable separation of the conducting cylinders.

In the drawings, wherein like reference characters have been used in the several figures to indicate like parts, three forms of the invention are illustrated as follows:

Fig. 1 illustrates a condenser in accordance with the invention the inner cylinder of which has a plurality of sections.

Fig. 2 illustrates a condenser similar to that of Fig. 1, including a different insulating means.

Fig. 3 illustrates a third construction, with a different outer cylinder and insulation support.

The condenser shown in Fig. 1 includes an inner plate 11 and an outer plate 14 having supporting members 10 and 13 of insulating material. The members 10 and 11 are in the form of cylindrical rods, the member 10 being provided with threads and attached to the end of cylinder 11 by means of a threaded projection 12 on the latter. The sections of cylinder 11 are attached together by similar threaded projections 12 integral with the respective cylinders. The several elements are thereby electrically connected together. Between each element, however, is an insulating washer 13 for supporting the plate 14 which is a hollow cylinder of conducting material arranged coaxially with the inner cylinders 10 and 11. Suitable electrical connection may be made to the inner cylinder by means of the conducting supporting member 15 and to the outer cylinder 14 by means of a brush 16. An additional mechanical supporting member 17 is attached to the opposite end of the insulating rod 10.

One end of the hollow cylinder 14 is provided with and attached to a nut 18, which is threaded to the insulating rod 10 and which upon being rotated is adapted to change the position of cylinder 14 with respect to cylinders 11 and 10, whereby the capacity of the condenser is varied.

Sufficient friction between nut 18 and cylinder 10 may be provided to maintain the conducting cylinders in fixed relative position after adjustment.

By increasing or decreasing the number of sections of the cylinder 11 and by providing a cylinder 14 of a greater or smaller length, the range of capacity may be extended or reduced as desired.

The elements of the condenser of this invention are of such form that the condenser is very compact and may be readily manufactured and installed. It also provides accurate spacing of the plates, because of the rigid manner in which they are supported. By reason of this fact and because of the arrangement of the plates, a very small minimum capacity may be obtained. Hence the condenser described above is especially effective for use in balancing the inter-electrode capacity of space discharge tubes. A condenser of this character may also be

readily combined with an ordinary air condenser as a means of obtaining an adjustable minimum capacity. This feature is of special advantage when the combined condensers are included in a resonant circuit and are designed to have the so-called "straight line frequency" characteristic.

In Fig. 2 there is illustrated a condenser, similar to that shown in Fig. 1, in which the cylinder 11 comprises only one section and which does not include the washers 13 and the nut 18. The cylinder 14 is insulated at the end adjacent to the inner cylinder 11 by means of a ring of insulating material held in the expanded portion 19 of cylinder 14.

The condenser shown in Fig. 3 is very similar to that illustrated in Fig. 2, but differs in the insulating means provided for separating the adjacent portions of the inner and outer cylinders. In this figure the insulating ring 19 and the expanded portion of cylinder 14 are absent. In place thereof, cylindrical insulating plugs 20 are associated with the conducting cylinder 11 and extend a distance beyond its surface on opposite sides so as to support the cylinder 14 out of contact with the cylinder 11.

These cylindrical plugs 20 may be of any other shape and may be secured in any suitable manner to the cylinder 11. They are illustrated as passing diametrically through the cylinder 11 and positioned with their axes at right angles to each other and to the axis of cylinder 10.

Although the invention has been described in relation to certain specific embodiments, it will be readily understood that these modifications may be multiplied without, in any sense, departing from the spirit and principles of applicant's invention which is therefore to be limited only as indicated by the scope of the appended claims.

What is claimed is:

1. A condenser comprising a cylindrical rod, a hollow conducting cylinder slidable over said rod, an insulating threaded member attached to said rod and engaging said hollow cylinder, and additional means, for insulating one end of said hollow cylinder from said cylindrical rod, adapted to move said hollow cylinder with respect to said rod.

2. A condenser comprising a cylindrical rod, a threaded insulating cylinder secured thereto, a hollow conducting cylinder, and threaded means carried by said hollow cylinder and engaging said insulating cylinder.

3. A condenser comprising a cylindrical conductor, a hollow conducting cylinder having a reduced portion at one end and an expanded portion at the opposite end, a threaded insulating rod attached to said cylindrical conductor and engaging the reduced end of said hollow cylinder and an insulating ring carried in said expanded portion and adapted to separate said cylindrical conductor and said hollow conducting cylinder.

4. In a condenser, a threaded insulating rod, a conducting cylindrical rod attached coaxially to said insulating rod, a second insulating member, and a conducting cylinder positioned coaxially with and adjustable over said conducting rod, said cylinder being supported by said second insulating member and being threaded to said insulating rod.

5. A condenser comprising a metallic rod, a threaded insulating member and a hollow cylinder having an end engaging said member said cylinder being adapted to move over said rod for varying the capacity of said condenser.

6. In a variable condenser, a conducting cylindrical rod, a threaded insulating rod attached coaxially thereto, a hollow conducting cylinder positioned coaxially with and adjustable over said conducting and insulating rods, threaded means carried at one end of said hollow conducting cylinder for engaging said insulating rod adapted to regulate the position of said hollow conducting cylinder with respect to the cylindrical rods, and means for supporting the other end of said hollow conducting cylinder in spaced relationship with said conducting rod.

In witness whereof, I hereunto subscribe my name this 1st day of December A. D., 1925.

ARTHUR HADDOCK.