(12) INTERNATIONAL APPLICATION PUBLISHED UNDER THE PATENT COOPERATION TREATY (PCT)

(19) World Intellectual Property Organization
International Bureau

(43) International Publication Date
31 December 2014 (31.12.2014)

WIPO | PCT

(10) International Publication Number
WO 2014/207429 A1

(51) International Patent Classification:
H04W 72/04 (2009.01) *H04W 88/08* (2009.01)

(21) International Application Number:
PCT/GB2014/000261

(22) International Filing Date:
27 June 2014 (27.06.2014)

(25) Filing Language: English

(26) Publication Language: English

(30) Priority Data:
1311827.8 28 June 2013 (28.06.2013) GB

(71) Applicant: **BRITISH TELECOMMUNICATIONS PUBLIC LIMITED COMPANY** [GB/GB]; 81 Newgate Street, London EC1A 7AJ (GB).

(72) Inventors: **HART, Jonathan Michael**; PP: C5A, 81 Newgate Street, London, EC1A 7AJ (GB). **TOWNEND, David Paul**; PP: C5A, 81 Newgate Street, London, EC1A 7AJ (GB). **CUEVAS, Maria**; PP: C5A, 81 Newgate Street, London, EC1A 7AJ (GB).

(74) Agent: **CHAN, Robin**; BT Legal, Intellectual Property Department, PP: C5A, BT Centre, 81 Newgate Street, London EC1A 7AJ (GB).

(81) Designated States *(unless otherwise indicated, for every kind of national protection available)*: AE, AG, AL, AM, AO, AT, AU, AZ, BA, BB, BG, BH, BN, BR, BW, BY, BZ, CA, CH, CL, CN, CO, CR, CU, CZ, DE, DK, DM, DO, DZ, EC, EE, EG, ES, FI, GB, GD, GE, GH, GM, GT, HN, HR, HU, ID, IL, IN, IR, IS, JP, KE, KG, KN, KP, KR, KZ, LA, LC, LK, LR, LS, LT, LU, LY, MA, MD, ME, MG, MK, MN, MW, MX, MY, MZ, NA, NG, NI, NO, NZ, OM, PA, PE, PG, PH, PL, PT, QA, RO, RS, RU, RW, SA, SC, SD, SE, SG, SK, SL, SM, ST, SV, SY, TH, TJ, TM, TN, TR, TT, TZ, UA, UG, US, UZ, VC, VN, ZA, ZM, ZW.

(84) Designated States *(unless otherwise indicated, for every kind of regional protection available)*: ARIPO (BW, GH, GM, KE, LR, LS, MW, MZ, NA, RW, SD, SL, SZ, TZ, UG, ZM, ZW), Eurasian (AM, AZ, BY, KG, KZ, RU, TJ, TM), European (AL, AT, BE, BG, CH, CY, CZ, DE, DK, EE, ES, FI, FR, GB, GR, HR, HU, IE, IS, IT, LT, LU, LV, MC, MK, MT, NL, NO, PL, PT, RO, RS, SE, SI, SK, SM, TR), OAPI (BF, BJ, CF, CG, CI, CM, GA, GN, GQ, GW, KM, ML, MR, NE, SN, TD, TG).

Published:

— *with international search report (Art. 21(3))*

(54) Title: WIRELESS ACCESS POINT

Fig. 1

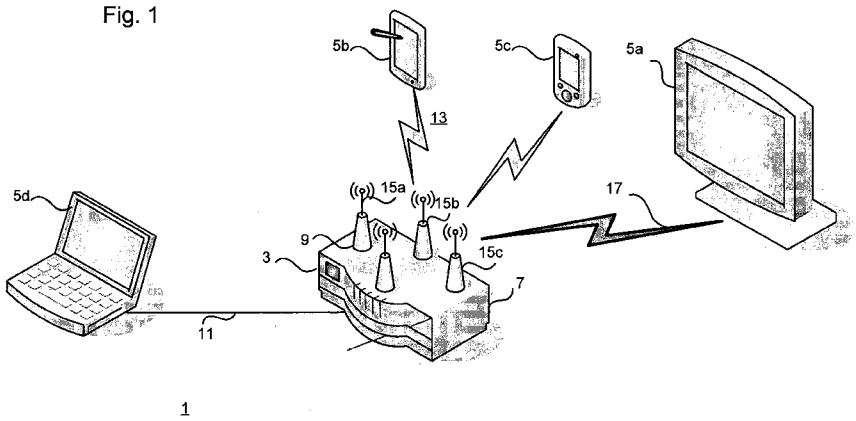

(57) Abstract: In a wireless network, wireless access points have multiple antennas for wireless data communication with client devices. For priority data sessions, client devices can request dedicated resources from the access point and if the request can be satisfied, the wireless access point will create a dedicated bearer link to the client device by allocating antenna resource exclusively for data transmission with that client device.

WO 2014/207429 A1

Wireless Access Point

The present invention relates to wireless data transmission and in particular to a wireless access point which can allocate radio resources in response to dedicated bearer requests.

Background

In wireless data communication systems such as those based on IEEE 802.11 family of wireless protocols relating to Wireless Local Area Networks (WLANs), access point (AP) devices are responsible for providing a central hub for Wi-Fi wireless signals to be propagated between wireless devices on the same local network and also for converting the wireless signals into signals carried over a wired network medium such as the Local Area Network or a large area network such as the Internet.

In a WLAN the relative positions of clients and the access point are rarely direct line of sight, and therefore objects such as walls, furniture will be obstructions in the path between the data communication devices. This causes the signal to deteriorate as the number of obstacles and range increases.

In recent times, wireless access points having multiple antennas and using Multiple Input-Multiple Output (MIMO) techniques have been used to try to minimise interference problems and increase performance. Rather than simply increasing the output power of all data transmissions, MIMO uses multiple transmitters and receivers to transfer more data and more robustly. Due to the obstructions, radio waves sent from a wireless access point with multiple antennas may propagate differently through the coverage environment following different paths and arrive at the intended receiver with different phases or at different times. Such multipath signals would normally interfere with each other and deteriorate the received signal. In MIMO, by altering the phase and transmission delay across each multipath, the received signals can constructively interfere and therefore improve the received signal when combined.

In another MIMO technique, data for transmission is divided and sent amongst several antennas so that multiple streams can be transmitted and received in parallel.

In Wi-Fi systems, resilience and stability for all connected devices are the main priorities of the AP rather than performance for particular users of the network. All devices contend for the same opportunity to transmit data on the channel. Quality of Service techniques can offer some prioritisation in determining high priority data and low priority data, but this is an example of scheduling rather than a guarantee of service.

Statement of invention

In one aspect, an embodiment of the present invention provides a wireless access point apparatus comprising: a plurality of antennas; a wireless network controller for managing wireless data communication with at least one client device; a request receiver for receiving a request from said at least one client device for the allocation of dedicated antenna resources; wherein in response to reception of the request, the wireless network controller is configured to allocate antenna resource from the plurality of antennas for the dedicated usage by the at least one client device for wireless data communication.

In a further aspect, an embodiment of the present invention provides a method of providing quality of service in a wireless network between a wireless access point and a wireless client device, the access point having a plurality of antennas and a wireless network controller, comprising: receiving a request for a dedicated data resource from a client device; and allocating at least one of the antennas for the dedicated usage of said wireless client device for wireless data communications.

In a further aspect, an embodiment of the present invention provides a wireless network including a wireless access point according to any of claims 1 to 7.

Figures

Embodiments of the present invention will now be described with reference to the accompanying Figures in which:

Figure 1 shows a system according to a first embodiment of the present invention in which a dedicated bearer link is established between a network device and an access point;

Figure 2 shows the components of the access point illustrated in Figure 1;

Figure 3 shows the functional components of the access point illustrated in Figure 2;

Figure 4 shows the components of a wireless device illustrated in Figure 1;

Figure 5 shows the functional components of the wireless device illustrated in Figure 4;

Figure 6 shows the overall process flow for establishing a dedicated bearer link;

Figure 7 is a flowchart of the operation of the access point when a request for a dedicated bearer link is received;

Figure 8 is a flowchart showing the resource availability check in more detail;

Figure 9 is a flowchart showing the processing of the local environment profiler in more detail;

Figure 10 shows a system in which two different devices request dedicated bearer links;

Figure 11 shows an alternative system;

Figure 12 shows an alternative system; and

Figure 14 shows an alternative system.

First embodiment

Figure 1 shows a local area network LAN 1 according to a first embodiment of the invention. In this embodiment, the local area network 1 is a home network, although the operation would be the same for other local area networks.

The LAN 1 is created by using a wireless access point 3 which provides network capability to a number of home devices 5. In Figure 1 the home devices 5 include a television 5a, tablet computer 5b, mobile phone 5c and laptop 5d. The wireless access point 3 includes both a wired Ethernet interfaces 7 and a Wi-Fi interface 9 conforming to the 802.11 family of wireless protocols so that home devices 5 can connect to the LAN 1 using either interface 7, 9. The LAN 1 can therefore be split into the Ethernet LAN 11 and the Wireless LAN 13 (WLAN) representing two parts of the same logical network but implemented using different layer 2 technologies. As shown in Figure 1, the television 5a, tablet 5b and mobile phone 5c is connected to the wireless access point 3 via Wi-Fi interface 9 of the access point 3 and are therefore part of the WLAN 13, while the laptop 5d is connected to the wireless access point 3 via the Ethernet interface 7.

The access point further includes antennas 15 for transmitting and receiving data and control signals with the wireless client devices 5. In accordance with MIMO, the presence of multiple antennas 15 can be configured to provide robustness and higher throughput within the LAN 1 by way of antenna and spatial diversity.

Although not shown, in this embodiment, the wireless home devices are also compatible with MIMO and some devices have more than one antenna.

In a conventional access point, the MIMO antenna configuration is determined purely based on the signal quality and capabilities of the connected devices in order to maximise performance for all wireless devices. In the first embodiment, the access point 3 is modified so that it can accept requests for dedicated bearer links and if the network can support such a dedicated link resource, to configure the antennas to provide dedicated radio resource between the wireless access point and the downstream wireless device. The effect of this modification is to provide the wireless device 5 with exclusive use of a particular antenna resource at any given time during a data transfer session. This provides better performance and reliability to the requesting device but possibly at the detriment of other devices since one antenna may no longer be available for MIMO diversity.

As shown in Figure 1, the television 5a is connected to the WLAN 13 and laptop 5d is connected to the Ethernet LAN 11. When the user of laptop 5d wishes to stream video data to television 5a with a guarantee of service, the laptop 5d sends a dedicated bearer request to the access point 3 requesting a dedicated link between the access point 3 and the television 5a in the downstream direction from the access point 3 to the television 5a. If the request is accepted, then a dedicated bearer link 17 is established between the access point 3 and the television 5a. In this embodiment, the effect of the dedicated bearer request is that at any given time, one the antenna 15a-d is used exclusively for transmission of data received from the laptop 5d via the wireless access point 3 to the television 5d for the duration of the streaming session. While one the antennas is being exclusively used, the remaining antennas are still available for any other wireless devices such as the tablet 5b and the smart phone 5c.

In this embodiment the laptop 5d sends the request for a dedicated bearer to be set up between the wireless access point and the television 5a even though the laptop 5d is connected via Ethernet because it knows the properties of the data stream for transmission to the television 5a. The request is sent on behalf of the television.

Figure 2 shows the components of the access point 3. The access point 3 includes antennas 15, a wireless network interface 21, a wired LAN interface 23, a processor 25, working memory 27 and a wired WAN interface 29.

The access point 3 contains processor instructions in working memory which, when executed configure the access point to function in accordance with the first embodiment. The access point 3 can therefore be regarded as having a set of functional components in use.

Figure 3 shows the functional components of the access point 3. From a functional viewpoint, the access point 3 includes: a wireless network interface 31, a wired LAN interface 33, routing logic 35, an antenna configuration manager 37 and a wired WAN interface 39 for communication with external networks but this is not used in the present embodiment.

As in a conventional access point, data packets between the various network interfaces are routed in accordance with the routing logic 35 to provide connectivity between the devices 5.

The access point 3 further includes a dedicated bearer request processor 41 and a wireless environment profiler 43.

The dedicated bearer request processor 41 processes dedicated bearer requests received from client devices 5 in order to determine whether the dedicated link request for downstream transmission can be accepted and also to alter the antenna configuration manager 37 if the request can be satisfied. The wireless environment profiler 43 monitors the state of the wireless network environment to provide the dedicated bearer request processor 41 with sufficient information to enable it to make such determinations. In this embodiment, the wireless environment profiler maintains a log of which devices in the wireless network can currently support MIMO as these are the devices which can support a dedicated bearer.

Figure 4 shows the components of a device such as laptop 5d. The laptop 5d includes a wireless network interface 51, two antennas 53, a processor 55, a memory 57 and a wired network interface 59.

When instructions stored in memory 57 are executed by the processor, the laptop 5d can be regarded as a set of functional components in accordance with the first embodiment.

Figure 5 shows the functional components of the laptop 5d. Laptop 5d includes a network interface 61, a dedicated bearer requester 63 and applications 65.

Applications in an application layer of a network protocol stack communicate with other applications running on other devices located on the network. The presence of multiple network interfaces, the access point 3 and other network entities is transparent to applications in the applications layer. The dedicated bearer requestor 63 is located within the network interface 61 which is part of a lower network stack and functions to determine when the requirements of the application's communication session may require a dedicated bearer link.

The relevant structures of other network devices such as television 5a is similar to laptop 5d, while smaller devices such as tablet computers and smart phones will differ in not having wired interfaces.

Figure 6 shows a high level interaction between two applications, for example between a video streaming application on the laptop 5d and a video player application on the television 5a. As shown, the applications only see a direct link between the each other and the underlying network topology is transparent to the applications. The data packets forming the data session actually travel from the wired interface 61 of the laptop 5a via the Ethernet LAN 11 to the wired interface 31 of the access point. At the access point 3, they are routed in accordance with the routing logic 35 to the wireless interface 33 of the television 5a and are processed before being passed to the video player application.

In this embodiment, the dedicated bearer requestor 63 of the laptop 5d and the dedicated request bearer processor 41 of the access point communicate to negotiate whether the television 5a and WiFi environment can accept a dedicated bearer and if so, to establish a dedicated bearer link 17 between the access point 3 and the television 5a by configuring the antenna configuration manager 37. In this embodiment, the process occurs before packets are transferred between the wired interface 61 of the laptop 5a and the television 5a via the access point 3.

Figure 7 is a flowchart showing the operation of the dedicated bearer request processor 41 when a request for a dedicated bearer link is received from laptop 5d on the LAN 1.

In step s1, the received dedicated bearer request is analysed to determine the target device and the requirements for the dedicated bearer link. This may be a Quality of Service requirement such as a throughput requirement, latency etc.

In step s3, the resource availability of antennas and access point load are determined. Figure 8 shows the processing of this step in more detail. In s21 the dedicated bearer request processor 41 checks that the number of current dedicated bearer links is less than the number of antennas available and in use.

Next, in step s23 the requirements of the dedicated bearer request are compared against a threshold maximum limit of the total uplink/downlink capacity of the network interface.

Returning to Figure 7, the dedicated bearer request processor 41 then queries the wireless environment profiler 43 to analyse the wireless environment. Figure 9 shows the processing steps in more detail. In step s31, Signal to Noise Ratio (SNR) reports from the wireless devices 5 on the

network are monitored and it is determined whether the observed SNR is higher than the SNR required for a MIMO link.

In step s33, a check is carried out to check whether the client can be paired with one or more other users for multi-user MIMO downlink transmissions.

In step s35 the client RSSI of received frames is assessed to see whether the signal strength is stable.

In step s37 the modulation rate of the last packet transmitted to, or received from, the client is checked. The dedicated bearer request processor 41 checks whether half the modulation rate is greater than the guaranteed bit rate request.

Returning to Figure 7, at step s7 based on all the tests in steps s3 and s5, the dedicated bearer request processor 41 determines whether the request can be accepted.

If the access point can accept the dedicated bearer request, then in step s9 the antenna configuration manager 37 is instructed to dedicate antenna resource to the target device. However, if the dedicated bearer request cannot be satisfied, then in step s11 there should be no changes to the MIMO setup and the antenna configuration manager is not instructed to make any specific changes.

In step s13 the requesting device is notified whether the dedicated bearer is allowed and processing ends.

If the dedicated bearer request is allowed, then the laptop 5d to the television 5a and the wireless access point 3 uses the allocated dedicated antenna to transmit data to the television 5a with a high likelihood of guaranteed bandwidth or latency. At any given time, or for each packet being transmitted, one of the antennas 15 of the access point 3 will be allocated for the exclusive use by the dedicated bearer request.

In the example, the access point allocates a single antenna to the dedicated bearer link. Since the television 5a has two antennas, it still benefits from MIMO antenna diversity to further improve reliability.

After the data session between the laptop and the television has ended, the access point 3 may decide that it no longer needs the dedicated bearer link and therefore the access point 3 can modify the antenna configuration to revert to the standard MIMO state to maximise antenna and spatial diversity.

In the first embodiment, the access point 3 is modified so that it can sacrifice some MIMO advantages in order to allow a dedicated bearer between a WLAN device and the access point. In the example, the laptop 5a can therefore stream data from the television 5d with minimal interference from other devices on the WLAN. In response to a dedicated bearer request, the dedicated bearer request processor 41 of the access point 3 determines whether there are available resources to service the request and if so, a dedicated bearer link is established between the WLAN device and the access point.

Figure 10 shows a second example according to the first embodiment. Wireless access point 83 is connected to four wireless devices 85 in a wireless network, desktop computer 85a, tablet 85b, a smartphone 85c and a laptop 85d using WiFi. The wireless access point 83 has 4 antennas 95 for MIMO and in particular Multi-User MIMO, operation. This example differs from the first example in that the laptop 85d is also part of the WLAN and connected to the wireless access point 83 via a wireless interface and not connected to the access point 83 via Ethernet.

In this example, the user of laptop 85d wishes to hold a high quality video call with the user of desktop computer 85a. In this case, the access point 83 has set up a dedicated bearer downstream link to the desktop computer 85a in response to a request from the laptop 85d. In addition to a request for a link from the wireless access point 83 to the desktop computer 85a, the laptop 85d also requests a dedicated bearer link for itself, i.e. from the access point to the laptop 85d. This ensures that any data being transmitted from the access point 83 in the downstream direction to the laptop 85d and the desktop computer 85a will have a dedicated antenna resources in each direction for the duration of the video call data session. The presence of multiple dedicated bearer link affects the likelihood of new dedicated bearer links being allowed due to the finite resources of the access point.

Second embodiment

Figure 11 shows a second embodiment of the present invention. In this system, a home LAN 101 contains an access point 103 for providing wireless and wired communication between home devices 105 and furthermore provides connectivity to correspondent devices 121 via a wide area network such as the Internet 123. As per the first embodiment, the access point 103 includes several antennas 115.

In such a system, the operation of the access point 103 is very similar to the first embodiment. Data can now be routed over a wireless interface such as IEEE 802.11 corresponding to the wireless network interface 31 shown in Figure 3 of the first embodiment, a wired LAN interface using Ethernet corresponding to the wired network interface 33 shown in Figure 3 of the first embodiment, and a wired WAN interface such as Ethernet or xDSL corresponding to the wired network interface 39 shown in Figure 3 of the first embodiment.

The operation of the access point 103 in relation to the dedicated bearer requests is the same as per the first embodiment. However when the correspondent device shown in Figure 11 and a home device such as smartphone 105c require a data session with a certain Quality of Service, then the smartphone 105c will request a dedicated bearer link with the access point 103. This can be performed prior to the flow of data packets if the home device 105 has knowledge of the data requirements, alternatively, the home device 105 can request a dedicated bearer link once the data session has started.

At this point, the dedicated bearer request processor will perform the processing in Figure 3 to determine whether the request can be supported. If the request can be accepted, then the antenna configuration manager will allocate antenna resource to the downstream link from the wireless access point 103 and the smartphone 105c for the duration of the data session.

The routing processor will route traffic between the smartphone and the WAN port of the access point for delivery onto the correspondent device via the Internet.

Similarly, when data is received from the Internet with packets destined for the smartphone, the routing processor will route the packets to the wireless interface. The packets will then be delivered to the smartphone via dedicated bearer link.

Alternatives and modifications

The embodiments describe a LAN in which the access point is able to create dedicated bearer links between one of its antennas and a wireless client device. It will be appreciated that variations of the network configurations are possible while still falling within the scope of the invention.

Figure 12 shows a LAN 201 having an access point 203 for providing wireless and wired communication between home devices 205 and correspondent devices 221 via a wide area network

such as the Internet 223. As per the embodiments, the access point 203 includes several antennas 215.

In this alternative, when a request is received, the dedicated bearer request processor of the access point 203 determines that multiple antennas 215 are required at any one time to satisfy the dedicated bearer request. This arrangement allows MIMO spatial diversity to increase throughput but reduces the number of antennas available for other devices.

Figure 13 shows a further alternative in which a LAN 301 includes an access point 303 for providing wireless and wired communication between home devices 305 and correspondent devices 321 via a wide area network such as the Internet 323. As per the first embodiment, the access point 303 includes several antennas 315.

In this alternative, the dedicated bearer request processor determines that a group of devices can share the dedicated bearer link. This may be useful in hotspot type networks such as BT WIFI where connected devices can be grouped.

Figure 14 shows a further alternative in which a LAN 401 includes an access point 403 for providing wireless and wired communication between home devices 405 and correspondent devices 421 via a wide area network such as a mobile Evolved Packet Core network 423 and a Wireless Access Gateway. As per the first embodiment, the access point 403 includes several antennas 415.

In this alternative, home devices 405 also contain cellular network connectivity and are able to switch between cellular and Wi-Fi networks. In a case where a home device 405 is connected to the cellular network via a dedicated bearer in EPC, when they return home and the access point is setup to allow Wi-Fi Offload, the dedicated bearer can be maintained.

In the embodiments, the antennas are omnidirectional. In an alternative, one or more of the antennas are directional antennas and therefore specialised for providing dedicated bearer links with isolation from other wireless devices. In such an alternative, these directional antennas are steerable.

As a further alternative, the antennas are omnidirectional but beamforming is used to isolate them from other wireless devices.

In the embodiments, the devices contain a dedicated bearer requester for requesting a dedicated bearer. These requests are for a certain quality of service. In an alternative, the client device does not have a specific dedicated bearer requester but instead the access point is able to monitor data

sessions for quality of service indictors and use these indicators in order to decide whether to provide a dedicated bearer link to the device.

In the embodiments, the dedicated bearer request processor causes the antenna configuration manager to allocate antenna resource such that at any one given time one or more antenna are allocated to the dedicated bearer request. Therefore in a data session, the actual antenna used will vary with time depending on the network conditions. In an alternative, to save processing at the expense of efficiency, the antenna configuration manager is arranged to allocate an antenna and the same antenna is used for the entire duration of the data session.

In the embodiments, wireless devices request dedicated bearers when a new data session requires resources. The dedicated bearer request processor then modifies the antenna configuration such that an antenna is available for transmissions from the wireless access point to the device. In an alternative, since devices are often performing concurrent tasks, the dedicated bearer is tied to a specific, or set of specific data flows between the wireless access point and network device. Other flows are transmitted using the remaining antennas in a conventional manner.

Claims

1. A wireless access point apparatus comprising:

a plurality of antennas;

a wireless network controller for managing wireless data communication with at least one client device;

a request receiver for receiving a request from said at least one client device for the allocation of dedicated antenna resources;

wherein in response to reception of the request, the wireless network controller is configured to allocate antenna resource from the plurality of antennas for the dedicated usage by the at least one client device for wireless data communication.

2. A wireless access point according claim 1, further comprising a monitor for determining the wireless data communication requirements between the wireless access point and the at least one client device; and

wherein the wireless network controller is operable to allocate antenna resource based on the determination of the monitor.

3. A wireless access point according to claim 1 or 2, further comprising an antenna manager for allocating at least one antenna for dedicated usage for the duration of a data session with the at least one client device.

4. A wireless access point according to claim 1 or 2, further comprising an antenna manager for allocating different ones of the plurality of antennas for dedicated usage during different time slots of a data session with the at least one client device.

5. A wireless access point according to any preceding claim, wherein at least one of the antenna is a directional antenna.

6. A wireless access point according to any preceding claim, wherein the wireless network controller is operable to configure the antennas for beamforming.

7. A wireless access point according to any preceding claim, wherein a plurality of data flows are established between the wireless access point and the at least one client device and antenna resources are allocated to a subset of the data flows.

8. A method of providing quality of service in a wireless network between a wireless access point and a wireless client device, the access point having a plurality of antennas and a wireless network controller, comprising:

receiving a request for a dedicated data resource from a client device; and

allocating at least one of the antennas for the dedicated usage of said wireless client device for wireless data communications.

9. A method according to claim 8, further comprising:

determining whether said request can be satisfied based on the current status of the wireless network; and

allocating antenna resource to the client device if the request can be satisfied.

10. A method according to claim 8 or 9 wherein the at least one antenna is allocated for dedicated usage for the duration of the data session between the wireless access point and the client device.

11. A method according to claim 8 or 9 wherein different ones of the plurality of antennas are allocated for dedicated usage during different time slots of a data session with the at least one client device

12. A method according to any of claims 8 to 11, further comprising configuring the antennas for beamforming.

13. A method according to any of claims 8 to 12, further comprising establishing a plurality of data flows between the wireless access point and the at least one client device and antenna resources are allocated to a subset of the data flows.

14. A wireless network including a plurality of wireless client devices and a wireless access point according to any of claims 1 to 7.

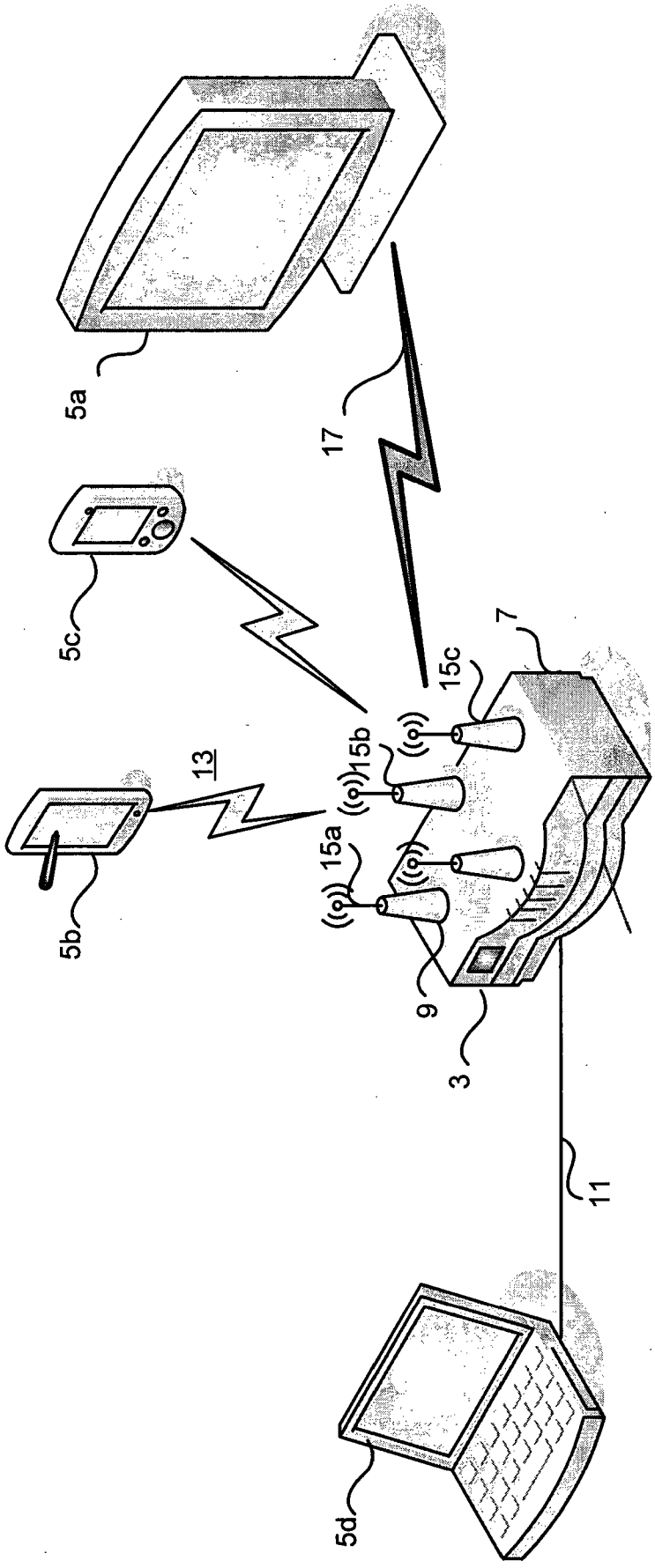

Fig. 1

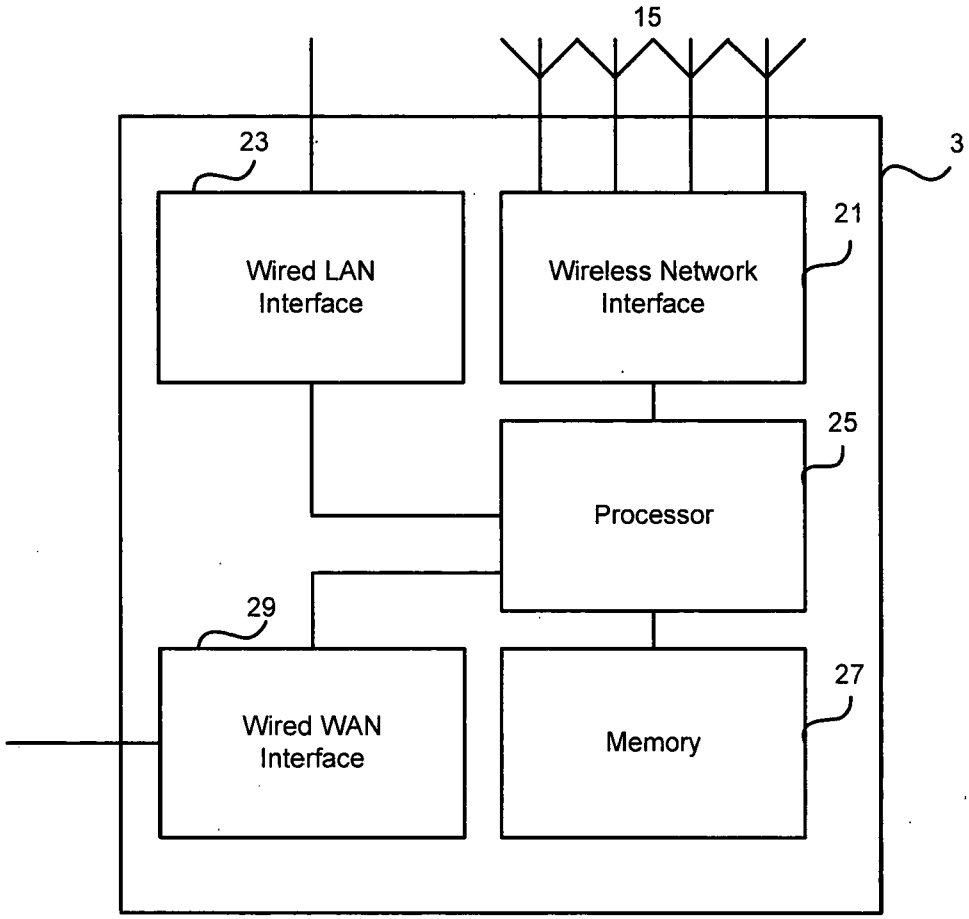
15
3
23
Wired LAN Interface
Wireless Network Interface
21
25
Processor
29
Wired WAN Interface
Memory
27

Fig. 2

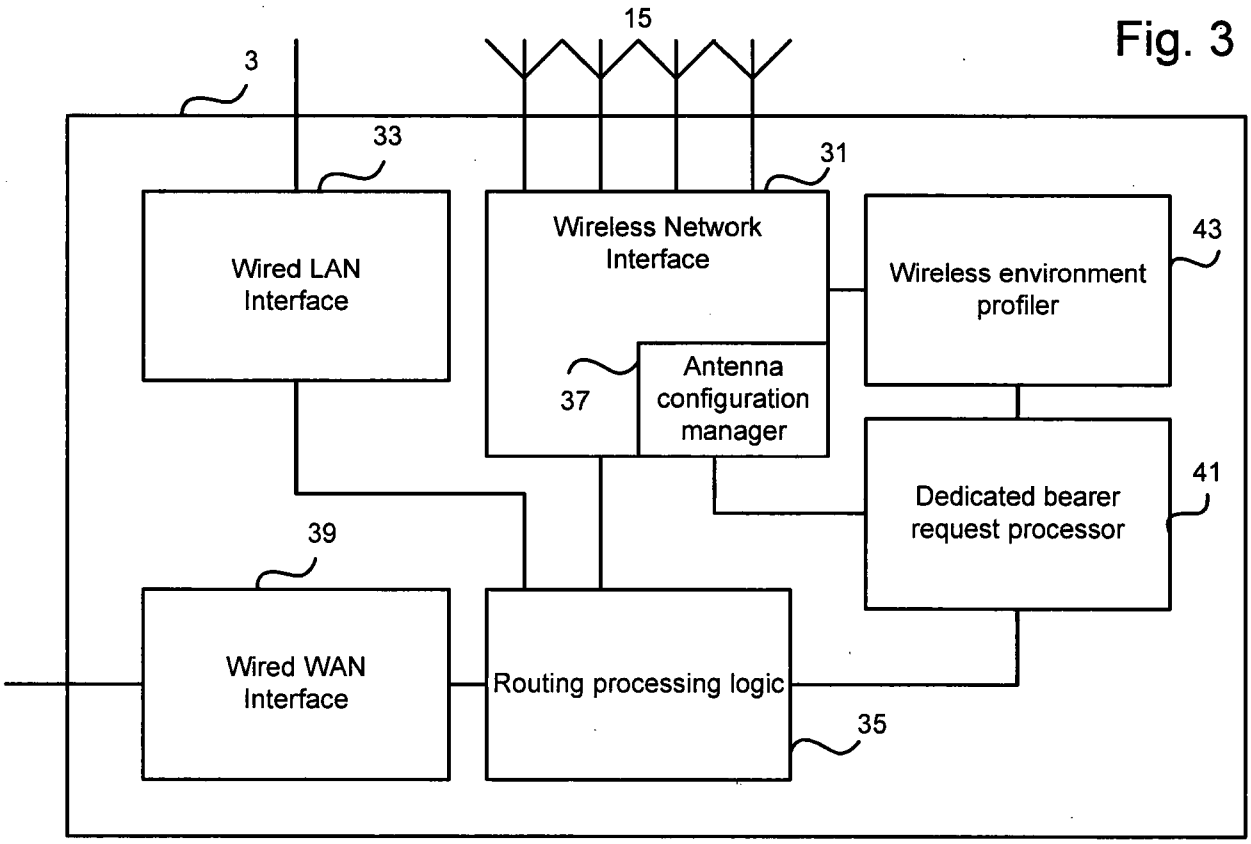
15
3
33
31
Wired LAN Interface
Wireless Network Interface
Wireless environment profiler
43
37
Antenna configuration manager
Dedicated bearer request processor
41
39
Wired WAN Interface
Routing processing logic
35

Fig. 3

Fig. 4

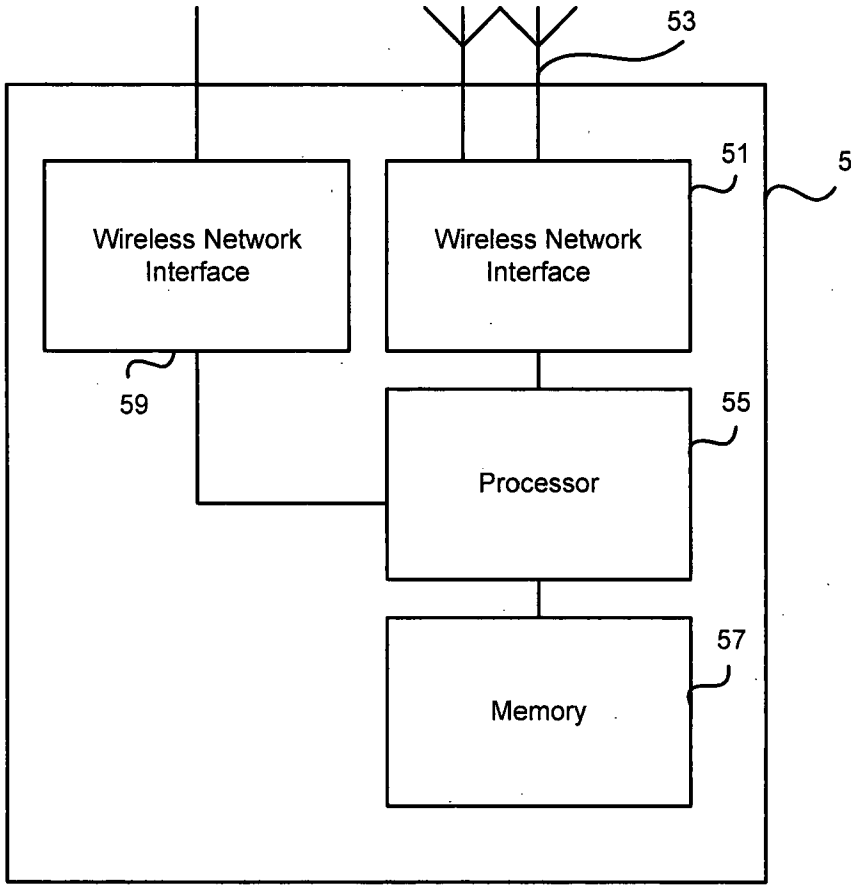
53
51
5
Wireless Network Interface
Wireless Network Interface
59
55
Processor
57
Memory

Fig. 5

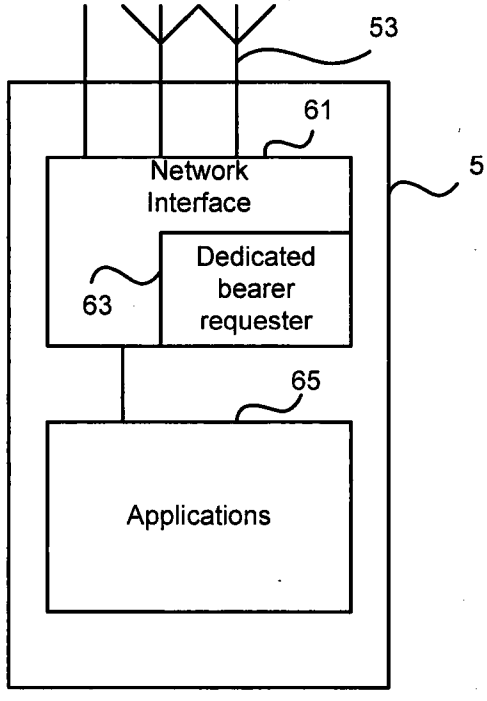
53
61
5
Network Interface
Dedicated bearer requester
63
65
Applications

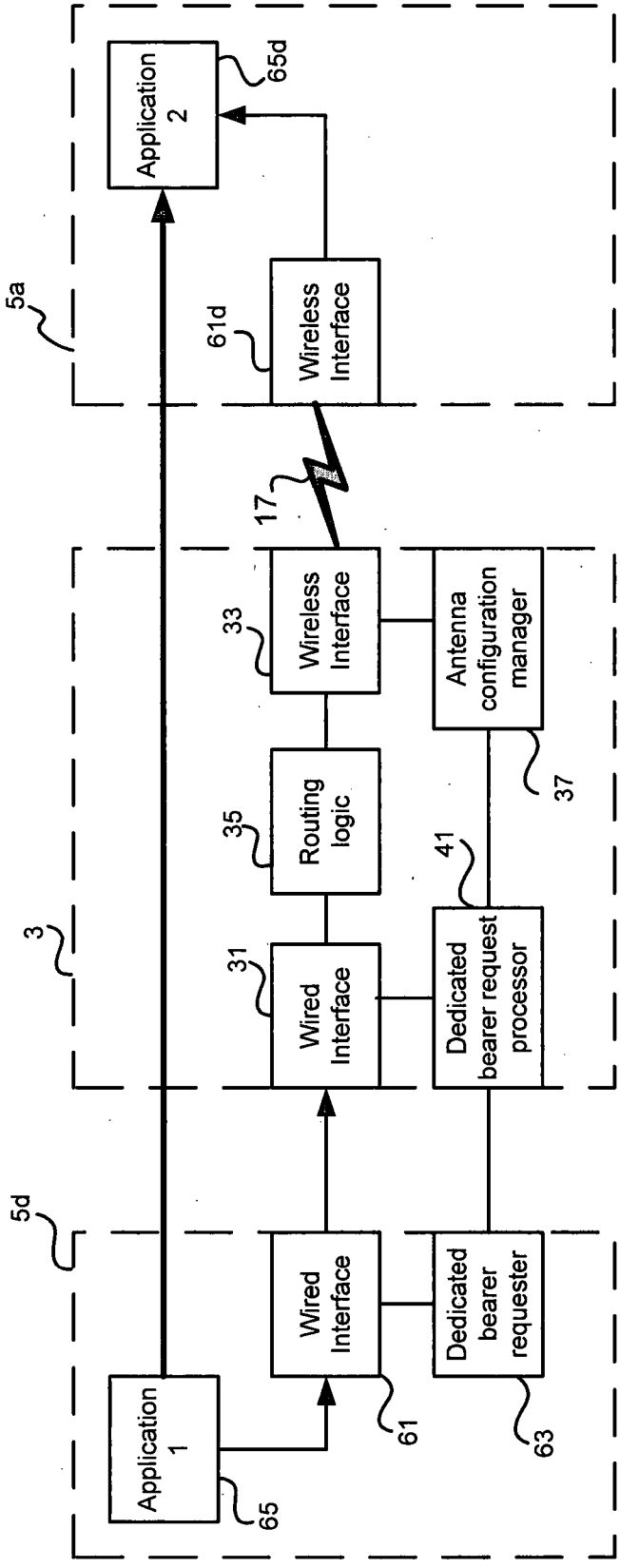
5a
Application 2
65d
61d
Wireless Interface
17
3
33
Wireless Interface
Antenna configuration manager
37
35
Routing logic
41
31
Wired Interface
Dedicated bearer request processor
5d
Wired Interface
Dedicated bearer requester
Application 1
65
61
63

Fig. 6

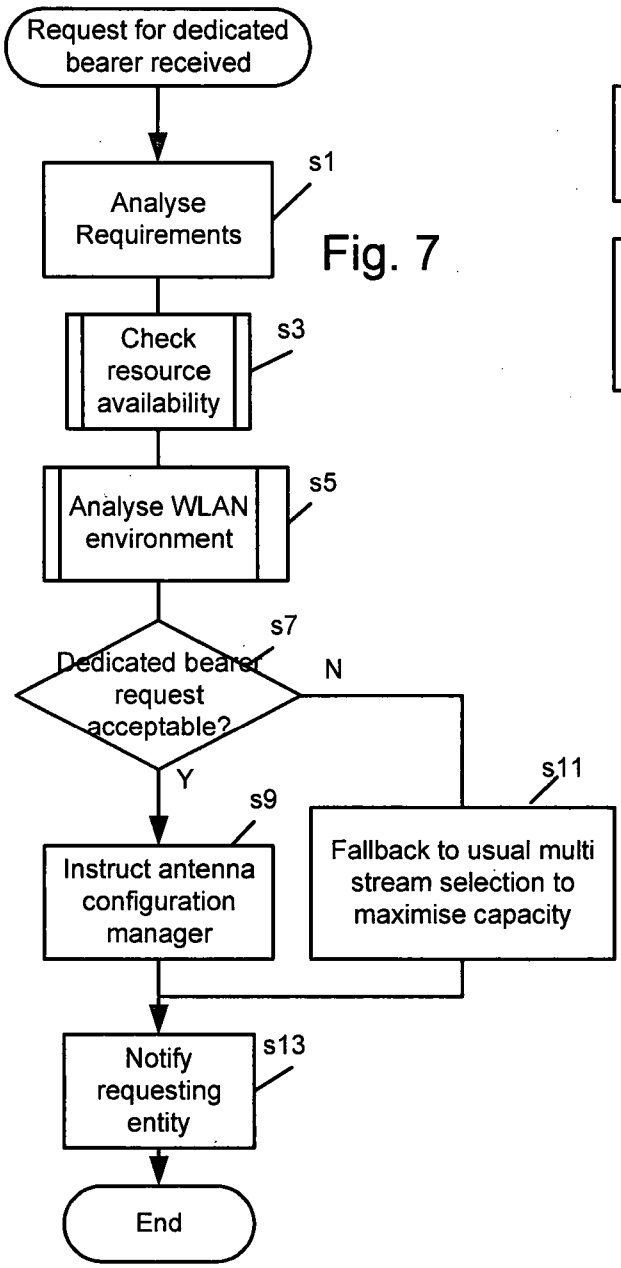

Fig. 7

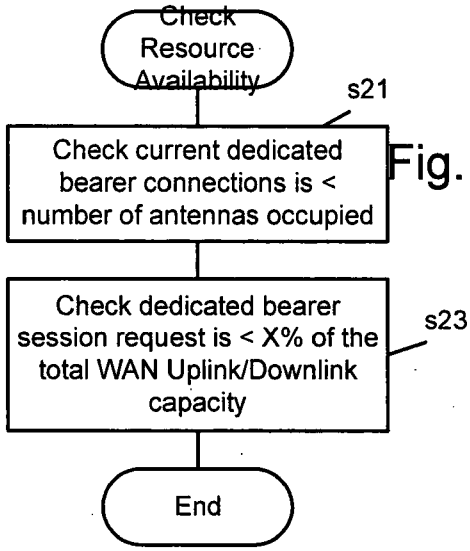

Fig. 8

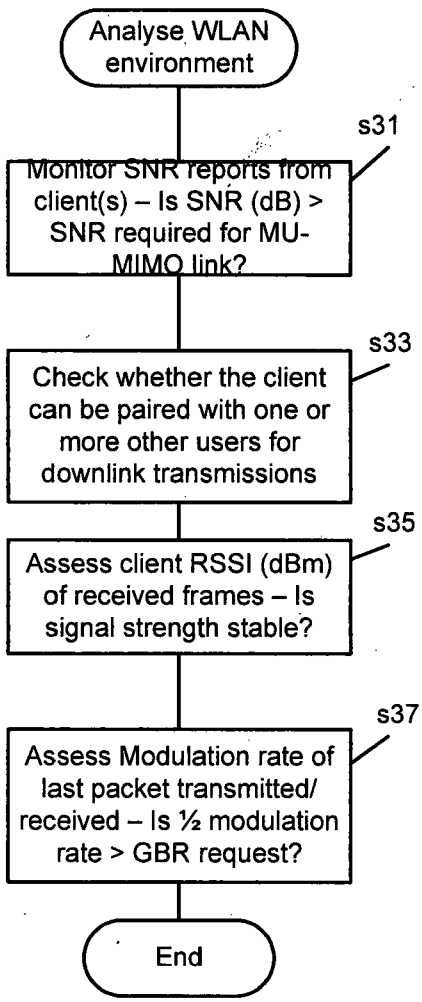

Fig. 9

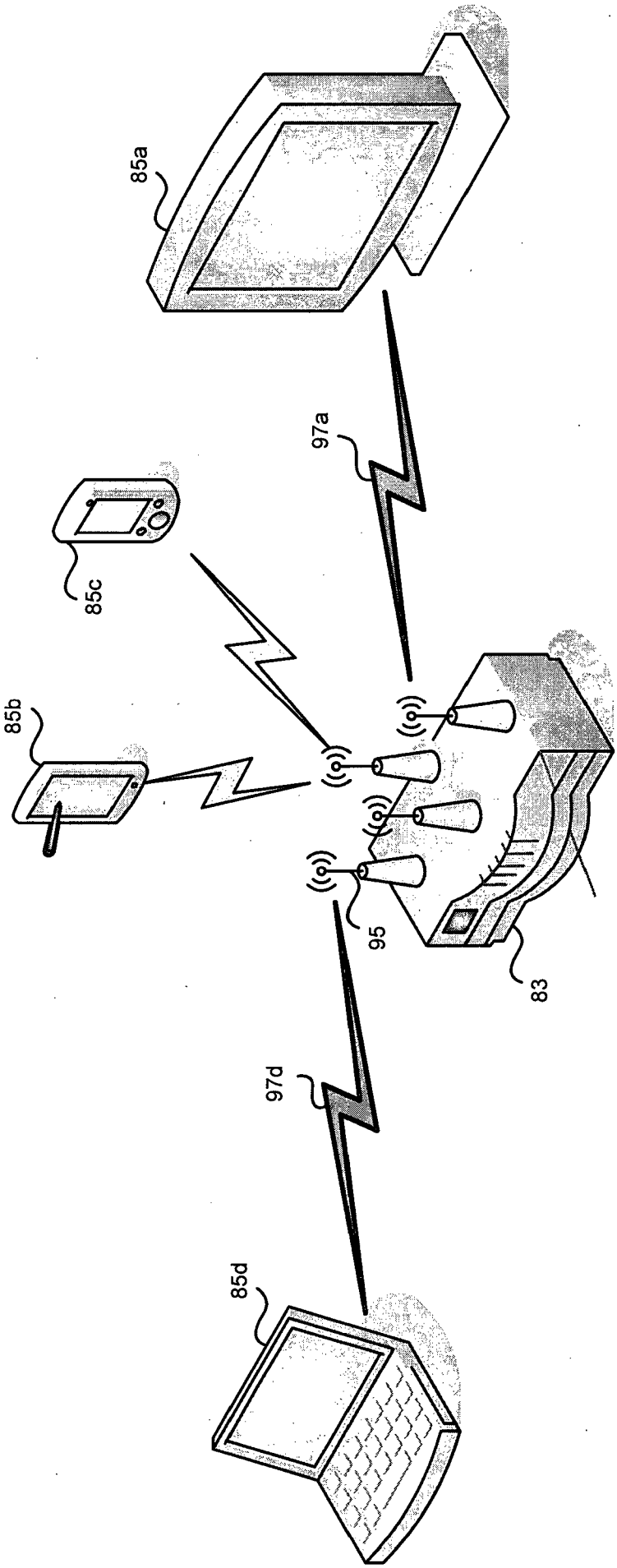

Fig. 10

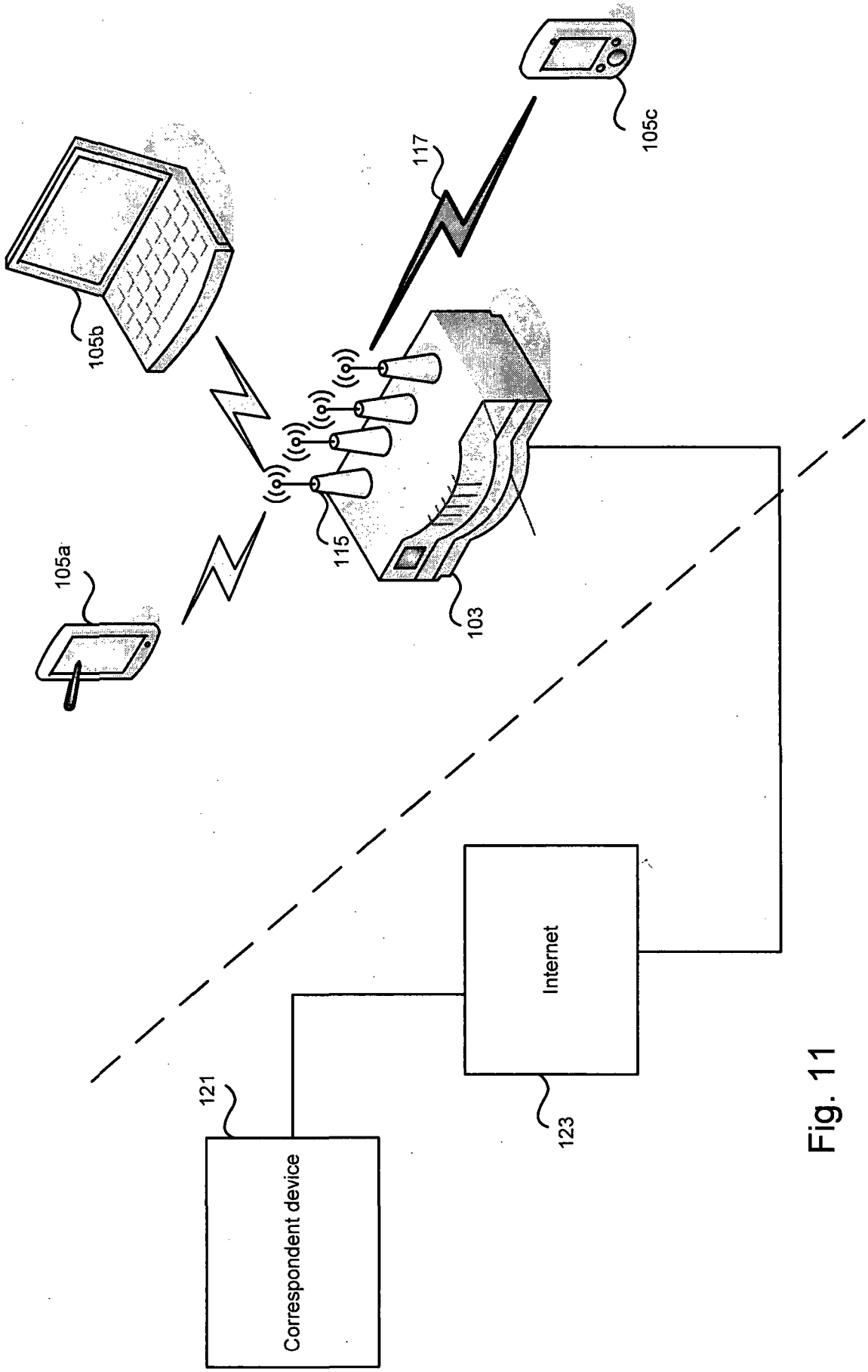
105a
105b
105c
115
117
103
Internet
121
Correspondent device
123

Fig. 11

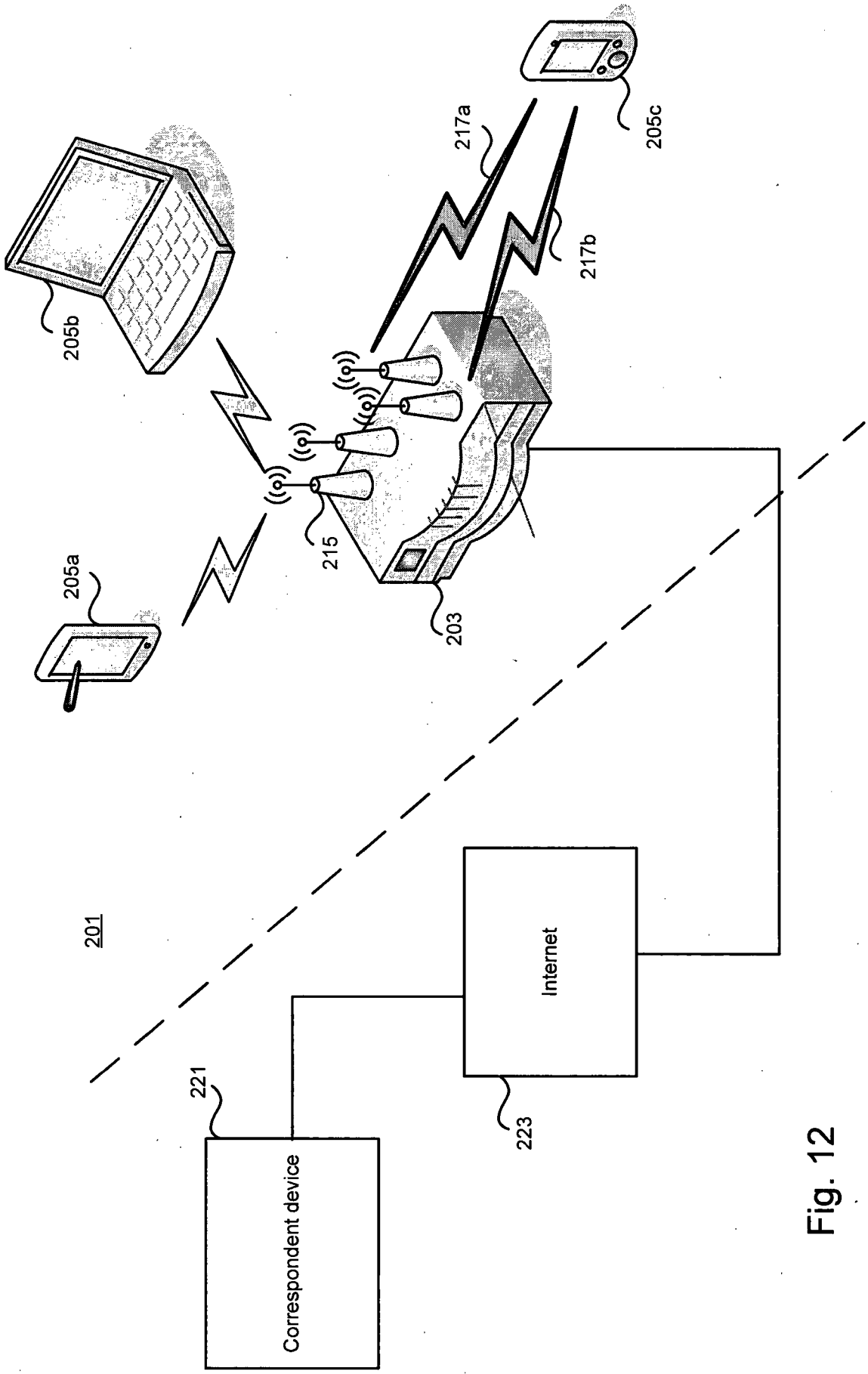
205a
205b
205c
217a
217b
215
203
201
Internet
221
223
Correspondent device

Fig. 12

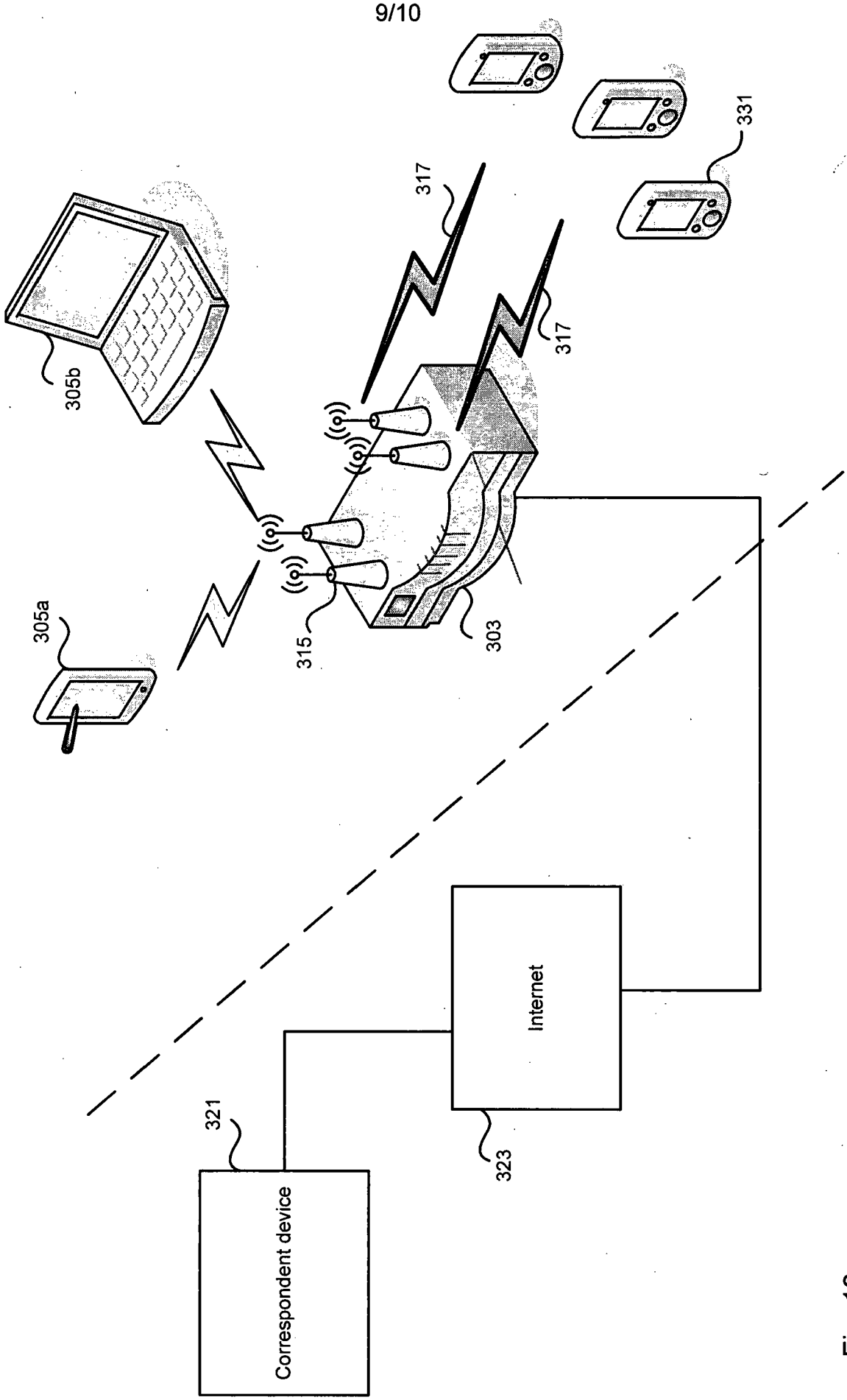
305b
305a
315
303
317
317
331
Internet
321
323
Correspondent device

Fig. 13

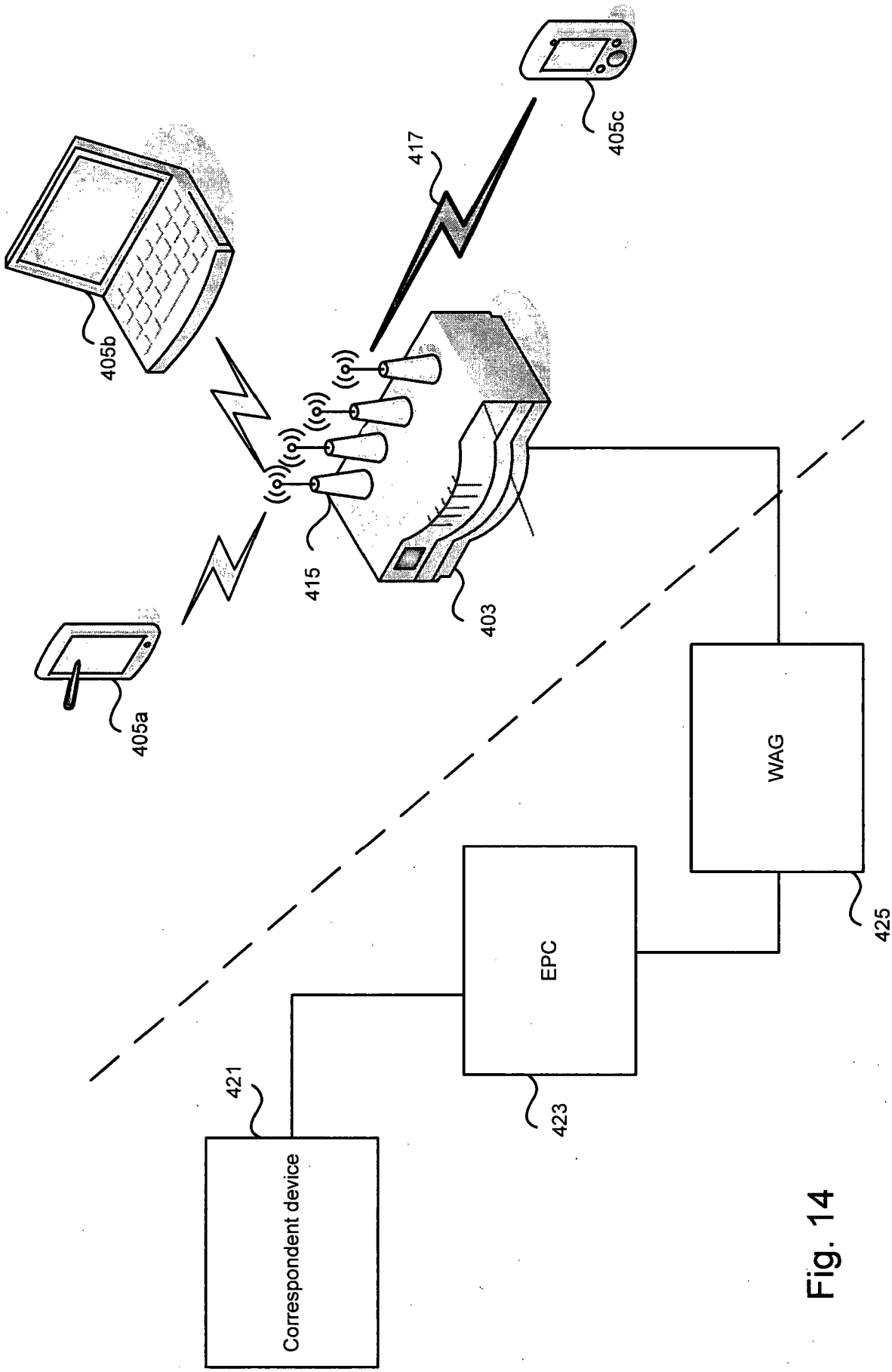
405a
405b
405c
415
417
403
WAG
425
EPC
423
421
Correspondent device

Fig. 14

INTERNATIONAL SEARCH REPORT

International application No
PCT/GB2014/000261

A. CLASSIFICATION OF SUBJECT MATTER
INV. H04W72/04 H04W88/08
ADD.

According to International Patent Classification (IPC) or to both national classification and IPC

B. FIELDS SEARCHED

Minimum documentation searched (classification system followed by classification symbols)
H04W

Documentation searched other than minimum documentation to the extent that such documents are included in the fields searched

Electronic data base consulted during the international search (name of data base and, where practicable, search terms used)

EPO-Internal, WPI Data

C. DOCUMENTS CONSIDERED TO BE RELEVANT

Category*	Citation of document, with indication, where appropriate, of the relevant passages	Relevant to claim No.
X	US 2013/163531 A1 (KIM SEONG YEON [KR]) 27 June 2013 (2013-06-27) abstract page 1, paragraph 19-21 page 2, paragraphs 23,31,32,34,36 page 3, paragraph 50-52 page 4, paragraphs 69,70,78,79 page 5, paragraph 90 -----	1-14
A	US 2009/225705 A1 (KWON HYE-YEON [KR] ET AL) 10 September 2009 (2009-09-10) abstract page 1, paragraphs 12,14 page 2, paragraphs 15,16 page 3, paragraphs 34,39,44,49,50 -----	1-14

-/--

[X] Further documents are listed in the continuation of Box C.

[X] See patent family annex.

* Special categories of cited documents :

"A" document defining the general state of the art which is not considered to be of particular relevance

"E" earlier application or patent but published on or after the international filing date

"L" document which may throw doubts on priority claim(s) or which is cited to establish the publication date of another citation or other special reason (as specified)

"O" document referring to an oral disclosure, use, exhibition or other means

"P" document published prior to the international filing date but later than the priority date claimed

"T" later document published after the international filing date or priority date and not in conflict with the application but cited to understand the principle or theory underlying the invention

"X" document of particular relevance; the claimed invention cannot be considered novel or cannot be considered to involve an inventive step when the document is taken alone

"Y" document of particular relevance; the claimed invention cannot be considered to involve an inventive step when the document is combined with one or more other such documents, such combination being obvious to a person skilled in the art

"&" document member of the same patent family

Date of the actual completion of the international search	Date of mailing of the international search report
22 September 2014	29/09/2014

Name and mailing address of the ISA/	Authorized officer
European Patent Office, P.B. 5818 Patentlaan 2 NL - 2280 HV Rijswijk Tel. (+31-70) 340-2040, Fax: (+31-70) 340-3016	Jurca, Dan

2

INTERNATIONAL SEARCH REPORT

International application No
PCT/GB2014/000261

C(Continuation). DOCUMENTS CONSIDERED TO BE RELEVANT

Category*	Citation of document, with indication, where appropriate, of the relevant passages	Relevant to claim No.
A	US 2011/176627 A1 (WU CHENG-HSUAN [TW] ET AL) 21 July 2011 (2011-07-21) abstract page 2, paragraphs 24,26,29,31 -----	1-14
A	EP 2 106 037 A2 (INTERDIGITAL TECH CORP [US]) 30 September 2009 (2009-09-30) abstract page 4, paragraph 27-34 -----	1-14

2

Form PCT/ISA/210 (continuation of second sheet) (April 2005)

INTERNATIONAL SEARCH REPORT

Information on patent family members

International application No
PCT/GB2014/000261

Patent document cited in search report	Publication date	Patent family member(s)	Publication date
US 2013163531 A1	27-06-2013	KR 20130073551 A	03-07-2013
		US 2013163531 A1	27-06-2013
US 2009225705 A1	10-09-2009	CN 101218783 A	09-07-2008
		KR 20060134798 A	28-12-2006
		US 2009225705 A1	10-09-2009
US 2011176627 A1	21-07-2011	CN 102158320 A	17-08-2011
		TW 201203903 A	16-01-2012
		US 2011176627 A1	21-07-2011
EP 2106037 A2	30-09-2009	AR 050873 A1	29-11-2006
		AR 066065 A2	22-07-2009
		AU 2005285274 A1	23-03-2006
		AU 2009202240 A1	25-06-2009
		BR PI0515656 A	29-07-2008
		CA 2580013 A1	23-03-2006
		DE 202005014251 U1	26-01-2006
		EP 1787401 A2	23-05-2007
		EP 2106037 A2	30-09-2009
		JP 4847455 B2	28-12-2011
		JP 2008512954 A	24-04-2008
		KR 20060071298 A	26-06-2006
		KR 20110127106 A	24-11-2011
		SG 158862 A1	26-02-2010
		TW 200931841 A	16-07-2009
		WO 2006031495 A2	23-03-2006