Oct. 11, 1932. H. C. KELLER ET AL 1,881,514

CONVEYER MECHANISM

Filed Oct. 15, 1930 2 Sheets-Sheet 1

Fig. 5

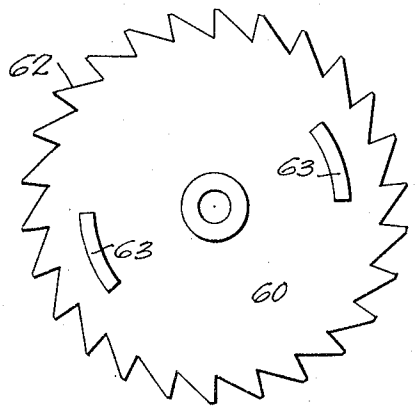

Fig. 4

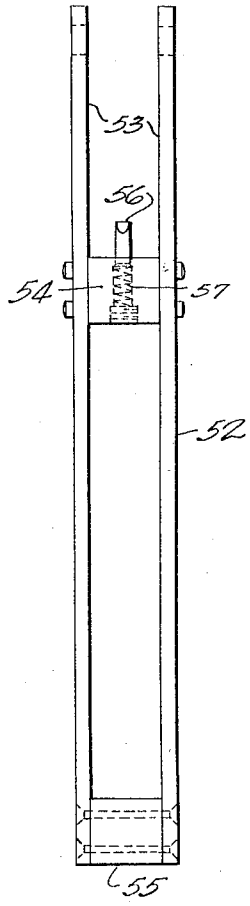

Fig. 1

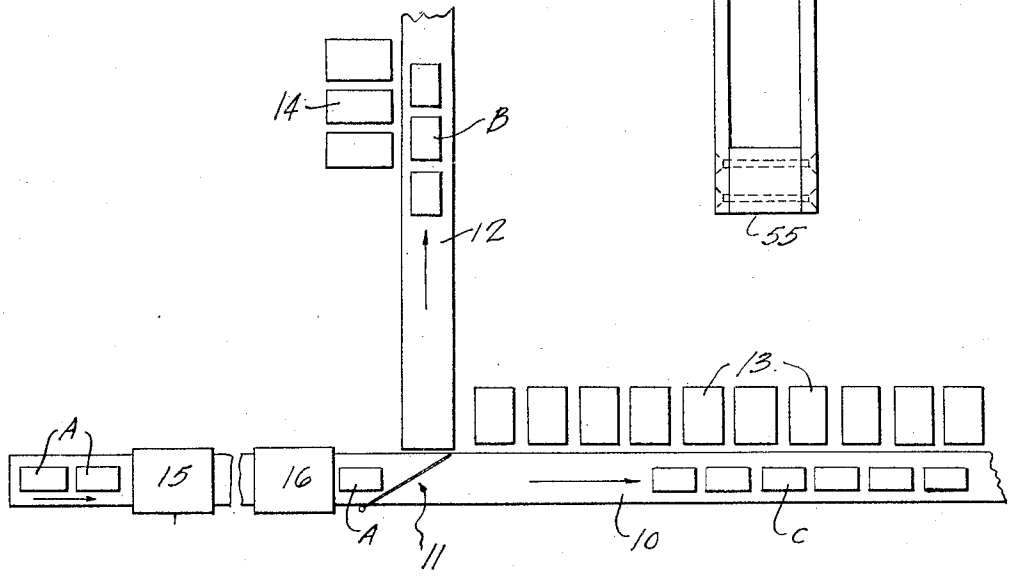

INVENTORS
HENRY C. KELLER
MAYNARD VAN BILLIARD
by Roberts, Cushman & Woodberry
ATTYS

Oct. 11, 1932. H. C. KELLER ET AL 1,881,514

CONVEYER MECHANISM

Filed Oct. 15, 1930 2 Sheets-Sheet 2

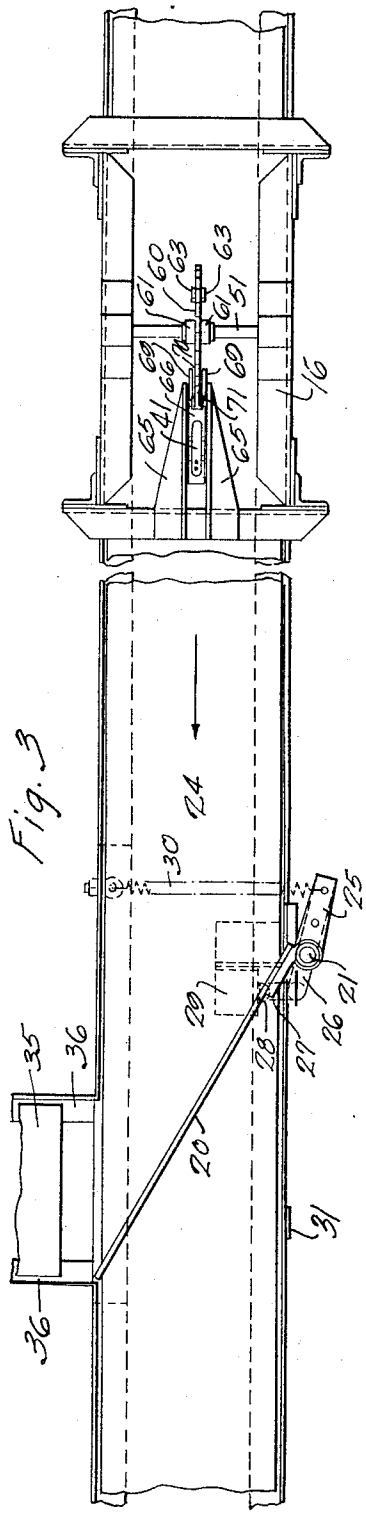

Fig. 3

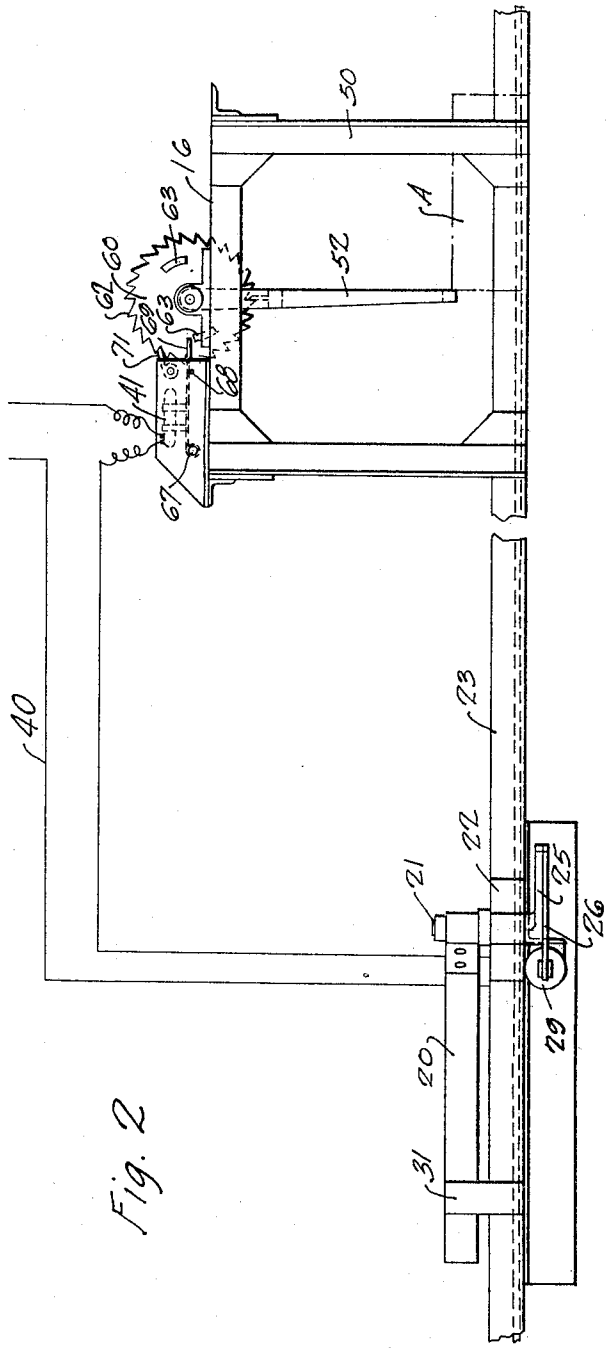

Fig. 2

INVENTORS
HENRY C. KELLER
MAYNARD VAN BILLIARD
by Roberts, Cushman & Woodberry
ATT'YS

Patented Oct. 11, 1932 1,881,514

UNITED STATES PATENT OFFICE

HENRY C. KELLER, OF SYRACUSE, NEW YORK, AND MAYNARD VAN BILLIARD, OF PHILADELPHIA, PENNSYLVANIA, ASSIGNORS TO THE LAMSON COMPANY, OF SYRACUSE, NEW YORK, A CORPORATION OF MASSACHUSETTS

CONVEYER MECHANISM

Application filed October 15, 1930. Serial No. 488,792.

This invention relates to an improvement in a conveyer mechanism that has for its object the provision of means actuated by each article passing along a guideway which means controls the operation of mechanism associated with the travel of the articles.

One application of this invention is in connection with the operation of deflector mechanism by which a certain predetermined number of articles are deflected from a train of articles traveling along a guideway, thereby separating the travelling articles into two groups. Such a mechanism has particular value in connection with the supply of articles such as boxes to operator stations and is here illustrated as applied to an installation wherein ten operator stations are installed along the main guideway while three operator stations are installed along a branch guideway. At such stations boxes supplied by the conveyer are treated by the operators and then sent to the proper destinations.

This particular installation is set forth as an illustration of the invention in the following specification and in the drawings which form a part thereof in which:

Fig. 1 is a view illustrating somewhat diagrammatically the selected embodiment of this invention;

Fig. 2 is an enlarged side elevation illustrating the deflector mechanism with control means therefor, employed in this embodiment, the mechanism being in the operative position, and a wiring diagram;

Fig. 3 is a plan view of the mechanism illustrated in Fig. 2 with the deflector mechanism in operative position;

Fig. 4 is an elevation of the trip actuated by each article travelling along the guideway; and

Fig. 5 is an elevation of the ratchet actuated by the trip.

Referring to Fig. 1 boxes A travel in a train along a guideway 10 to a deflector mechanism 11 by which certain boxes B are deflected onto a branch guideway 12, while other boxes C continue along the main guideway 10. Located along the main guideway 10 beyond the deflector mechanism are a plurality of operator stations 13, ten such stations being here shown, while located along the branch guideway 12 are three other such operator stations 14. The articles approaching the deflector mechanism 11 pass first through a spacing device 15 which may be of any desired type as for example that shown in the application of Chester S. Jennings, Serial No. 465,098, filed July 1, 1930, by which the articles are spaced a predetermined distance apart and thence through a device 16 by which the operation of the deflector arm is controlled.

The purpose of the present embodiment is to separate the boxes approaching over the main guideway into two groups, one, containing ten boxes, continuing over the main guideway, while the other, containing three boxes, is deflected onto the branch guideway, such separation being performed automatically without necessitating the attention of an operator. The deflector mechanism 11, illustrated in Figs 2 and 3, to which attention is particularly directed, comprises a deflector arm 20 of the well known type mounted at one end upon a shaft 21 suitably supported in a bracket 22 secured to one of the side rails 23 of the main guideway, between which travels a conveyer belt 24. Secured to the shaft 21 is an arm 25 connected by an extension 26 to a link 27 carried by the core 28 of a solenoid 29 suitably supported by a side rail 23 in any desired manner. A spring 30 extending below the belt 24 normally holds the arm 20 in the open position resting against a stop 31 also carried by a side rail. When the deflector arm is in the operating position boxes transported by the belt 24 are deflected into the branch guideway 12, here shown as including a conveyer belt 35 which travels

between side rails 36, the boxes deflected onto the guideway being transported to the operator stations 14 by the belt 35.

Referring to Fig. 3 it will be observed that when the solenoid 29 is energized the core is retracted and the deflector arm 20 swung into the operating position against the tension of the spring 30. The solenoid 29 is in a circuit 40 which also includes a normally open switch 41, here shown as of the mercoid type. Such a switch is open when horizontal as shown in Fig. 2 and closed when tilted, the mercury therein flowing to the left end of the tube so that the current will travel from a suitable source of supply through the core 29, energizing it and causing the deflector arm 20 to be swung into the operating position.

The switch 41 is a part of the control device 16 shown at the right of Figs. 2 and 3, being carried by a suitable frame 50 which extends above the main guideway and on which is supported a transversely extending shaft 51. An arm 52 hereafter referred to as a trip is pivotally mounted at its upper end on the shaft 51 and extends into the path of travel of the articles so that it is actuated by each article as it passes through the control device. The trip 52, as shown in Fig. 4, preferably comprises a pair of plates 53 separated by blocks 54, 55. In a pocket in the block 54 is mounted a pawl 56 normally held extended by a spring 57 in the position shown in Fig. 4. Carried by the shaft 51 between the plates 53 is a ratchet wheel 60 suitably spaced by collars 61 from the plates 53, the teeth 62 of the ratchet being normally in contact with the pawl 56.

Secured on each side of the ratchet 60 are arcuate blocks 63 which, in the present instance, span the distance defined by three of the teeth 62. As shown particularly in Fig. 5, the ratchet 60 is provided with twenty-six teeth 62 and the blocks 63 are diametrically arranged in pairs separated by ten teeth. Pivotally mounted between two angle plates 65, carried by the upright 50 is a tongue 66 on which is supported the mercoid switch 41. One end of the tongue 66 is supported on a stud 67 carried by the plates 65, while the other end normally rests on a cross pin 68 also carried by the plates so that the switch is in its normal position with the circuit open. The end of the tongue 66 which rests upon the pin 68 terminates in a yoke formed by fingers 69 separated by a space 70 through which the ratchet 60 normally moves without interference. A pawl 71, carried by the plates 65 above the tongue 66 normally engages the teeth 62 and thus prevents the travel of the ratchet 60 in other than the clockwise direction indicated in Fig. 2. The projecting fingers 69 of the tongue 66 extend into the path of travel of the blocks 63, so that when engaged thereby the tongue is raised tilting the switch 41 so that the circuit 40 is closed and the solenoid 29 is energized.

The operation of this particular installation will now be described with particular reference to Figs. 2 and 3. As each box or other article A contacts with the lower end of the trip 52, the trip is swung in a clockwise direction advancing the ratchet 60 one step. This movement of the ratchet out of the position shown in Fig. 2 brings two of the blocks 63 into contact with the fingers 69, tilting the tongue 66 and thus through the switch 41 closing the circuit 40, energizing the solenoid 29 and carrying the arm 11 into the position shown in Fig. 3. The arm remains in this position until the trip 52 has been actuated by two more boxes A and since the boxes are equally spaced it will be apparent that during this time three boxes will be deflected from the main guideway onto the branch guideway. When the third box actuates the trip 52 however, the blocks 63 pass beyond the fingers 69 and the tongue is returned by gravity to the normal position shown in Fig. 2, which position it retains until another pair of blocks 63 have been brought into contact therewith after the passage of ten articles. Consequently the train of boxes A is divided into two groups consisting of ten boxes which pass to the operator stations 13 and three boxes which pass to the operator station 14. This division of the boxes continues as long as boxes are being fed to the control device.

While the operation of this device has been described for the separation of the boxes into groups of ten and three respectively, it is obvious that by changing the positions of the blocks 63 or by substituting for the blocks here shown blocks which span four, five or any number of teeth or by substituting for the twenty-six toothed ratchet wheel 60, a ratchet wheel having a greater or less number of teeth the train of boxes can be divided into groups of any desired number. Furthermore, instead of operating the deflector arm as here shown, the control device may be employed to operate a stop counter, an elevator or any other element associated with the travel of the boxes.

The feature of this invention is the provision of a control device operated automatically by the passing articles by which the articles are manipulated, and while one embodiment of this invention has been shown and described, we are not limited thereto since other embodiments could be made without departing from the spirit and scope of the invention as set forth in the following claims.

We claim:

1. In a conveyer system including a guideway along which articles travel, a deflector mechanism by which articles may be deflected

from the guideway, said mechanism including a deflector arm, electrical means which, when energized, shift said arm into operating position, and means actuated by each article passing along the guideway toward the deflector arm, which means after actuation by a predetermined number of articles energizes said electrical means, which thereupon shifts the deflector arm into operative position to deflect from the guideway articles which have actuated such means and holds it energized until said means have been actuated by a predetermined number of articles.

2. In a conveyer system including a guideway along which articles travel, a deflector mechanism by which articles may be deflected from the guideway, said mechanism including a deflector arm, electrical means, which when energized shift said arm into operating position, a trip actuated by each article traveling along the guideway toward the deflector arm, and means operated by said trip after actuation by a predetermined number of articles for energizing said electrical means which thereupon shifts the deflector arm into operative position to deflect from the guideway articles which have actuated such means and keeping it energized until a predetermined number of articles have actuated the trip.

3. In a conveyer system including a guideway along which articles travel, a deflector mechanism by which articles may be deflected from the guideway, said mechanism comprising a deflector arm, an electrical element which, when energized, shifts said arm into operating position, a movable circuit control device by which the electrical element is energized or deenergized and means actuated by each article as it travels along the guideway toward the deflector arm, which means after actuation by a predetermined number of articles moves said device into a position wherein it energizes the electrical element and the arm is shifted into operating position to deflect from the guideway articles which have actuated such means and holds the device in such position until it has been actuated by a predetermined number of articles.

4. In a conveyer system including a guideway along which articles travel, a deflector mechanism by which articles may be deflected from the guideway, said mechanism including a deflector arm, electrical means for shifting said arm into operating position and means for controlling the action of said electrical means, comprising a trip actuated by each article, a circuit control device and movable means operated upon each actuation of the trip which movable means after a predetermined number of operations causes said device to close the circuit to energize the electrical means and shift the deflector arm into operative position, and after a further predetermined number of operations allows the device to open the circuit to deenergize the electrical means and shift the arm into the inoperative position.

5. In a conveyer system including a guideway along which articles travel, a deflector mechanism by which articles may be deflected from the guideway, said mechanism including a deflector arm, electrical means for shifting said arm into operating position and means for controlling the action of said electrical means, comprising a trip actuated by each article, a circuit control device, a movable support for such device which, in one position, causes the device to close the circuit and movable means operated upon each actuation of the trip, which movable means, after a predetermined number of operations, moves said support whereupon the circuit is closed to energize the electrical means and shift the deflector arm into operative position and after a further predetermined number of movements causes the circuit to open, deenergizing the electrical means and returning the deflector arm to its inoperative position.

6. In a conveyer system including a guideway along which articles travel, a deflector mechanism by which articles may be deflected from the guideway, said mechanism including a deflector arm, electrical means for shifting said arm into operating position and means for controlling the action of said electrical means, comprising a trip actuated by each article, a circuit control device, a pivotally mounted support for such device which device keeps the circuit open when the support is in its normal position, and movable means operated upon each actuation of the trip, which movable means, after a predetermined number of operations raises said support out of its normal position to cause the device to close the circuit whereupon the electrical means is energized to shift the deflector arm into operative position, and after a further predetermined number of movements allows the support to resume its normal position whereupon the circuit is opened, the electrical means deenergized and the deflector arm shifted to its inoperative position.

7. In a conveyer system including a guideway along which articles travel, a deflector mechanism by which articles may be deflected from the guideway, said mechanism including a deflector arm, electrical means for shifting said arm into operating position and means for controlling the action of said electrical means, comprising a trip actuated by each article, a circuit control device, a pivotally mounted normally horizontal support for such device which device keeps the circuit open when the support is horizontal, and movable means operated upon each actuation of the trip, which movable means, after a predetermined number of operations raises

the support from its normal position to cause the device to close the circuit whereupon the electrical means is energized to shift the deflector arm into operative position, and after a further predetermined number of operations allows the support to resume its normal position whereupon the device opens the circuit, the electrical means is deenergized and the deflector arm shifted into inoperative position.

Signed by HENRY C. KELLER at Syracuse, New York, this 13th day of September, 1930, and by MAYNARD VAN BILLIARD at Syracuse, New York, this 10th day of October, 1930.

HENRY C. KELLER.
MAYNARD VAN BILLIARD.