United States Patent [19]

Miller

[11] **3,713,125**

[45] **Jan. 23, 1973**

[54] **ALARM SYSTEM UTILIZING A DIGITAL RADIO LINK**

[76] Inventor: **Cecil John Miller,** 19300 Holsted Street, Northridge, Calif. 91302

[22] Filed: **July 6, 1971**

[21] Appl. No.: **160,117**

Related U.S. Application Data

[63] Continuation of Ser. No. 794,873, Jan. 29, 1969, abandoned.

[52] **U.S. Cl.** .....**340/224 R,** 343/225 R

[51] **Int. Cl.** **G08b 19/00**

[58] **Field of Search**.....340/224 P; 343/225 R

[56] **References Cited**

UNITED STATES PATENTS

2,899,674	8/1959	Sierel	340/224 X
2,979,706	4/1961	Simon et al.	340/224
3,149,317	9/1964	Brugliera et al.	340/224
3,233,243	2/1966	Cooper et al.	340/224 X
3,271,588	9/1966	Minc	325/163 X
3,289,152	11/1966	McIlwraith et al.	325/163 X
3,290,597	12/1966	Denny et al.	340/224 X
3,305,635	2/1967	Kadis	325/163 X
3,417,332	12/1968	Webb	325/163
3,230,454	1/1966	VanBurkleo	340/224 X
3,467,889	9/1969	Brough-Cunningham et al.	340/150 X

Primary Examiner—Harold I. Pitts
Attorney—Robert E. Geauque

[57] **ABSTRACT**

An automatic digital-encoding burglary-robbery apprehension system is described which utilizes existing telephone lines and direct radio transmission links from an area control center to a patrol car or helicopter. The transmitted alarm signal is digitally coded to provide location identification.

7 Claims, 4 Drawing Figures

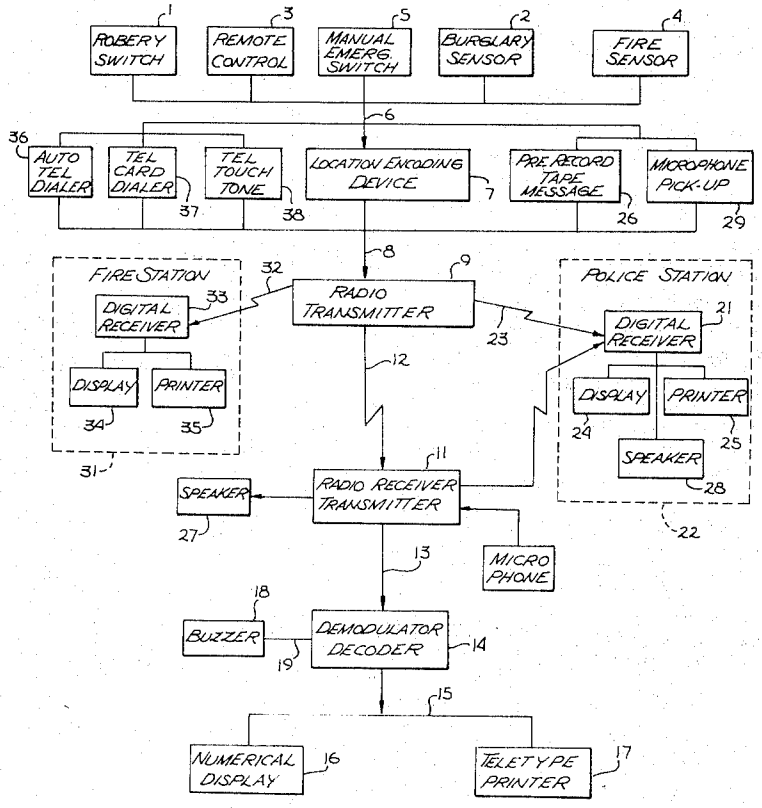

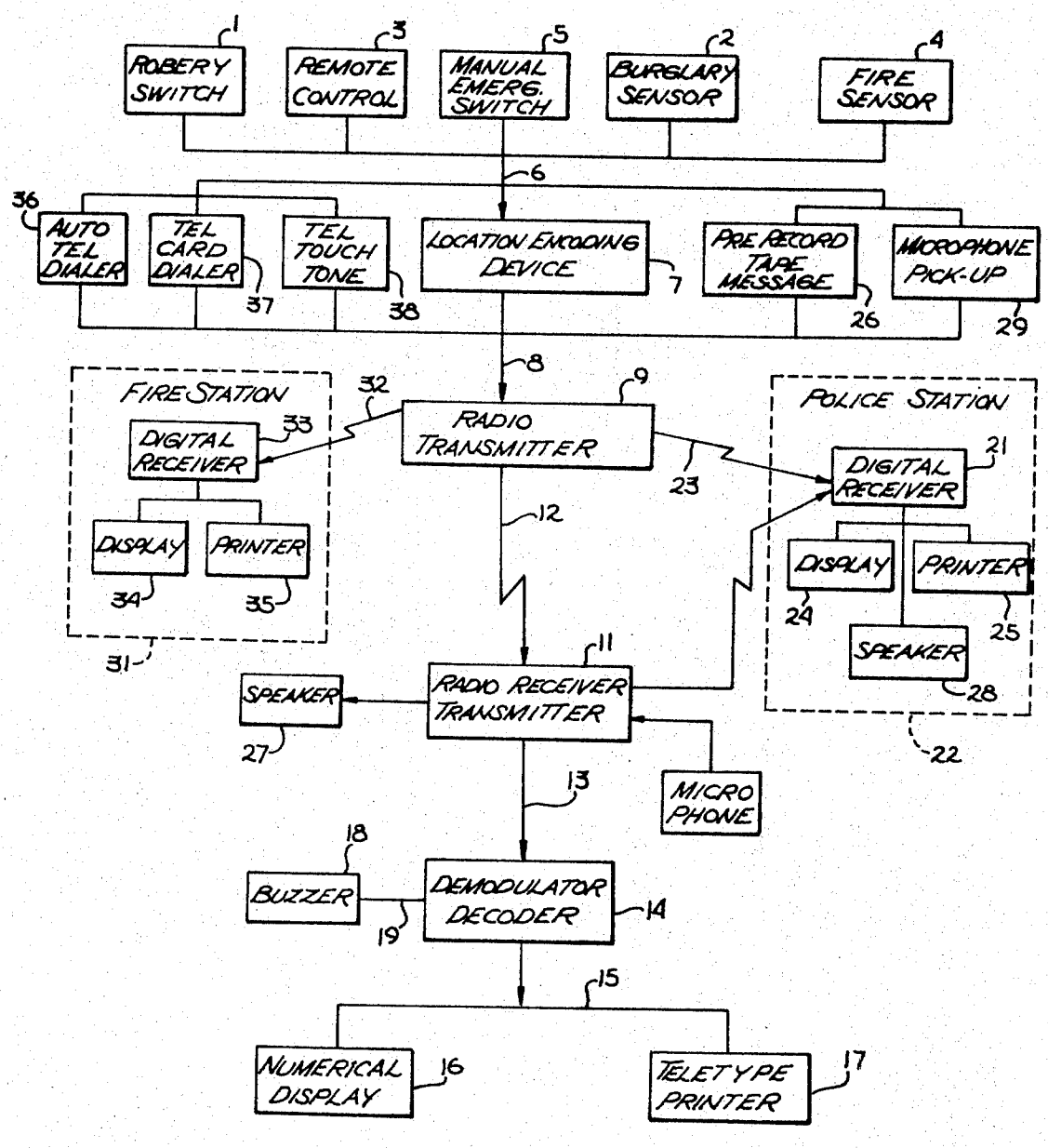

Fig. 1

CECIL JOHN MILLER
INVENTOR.

BY R. E. Beaugue
ATTORNEY

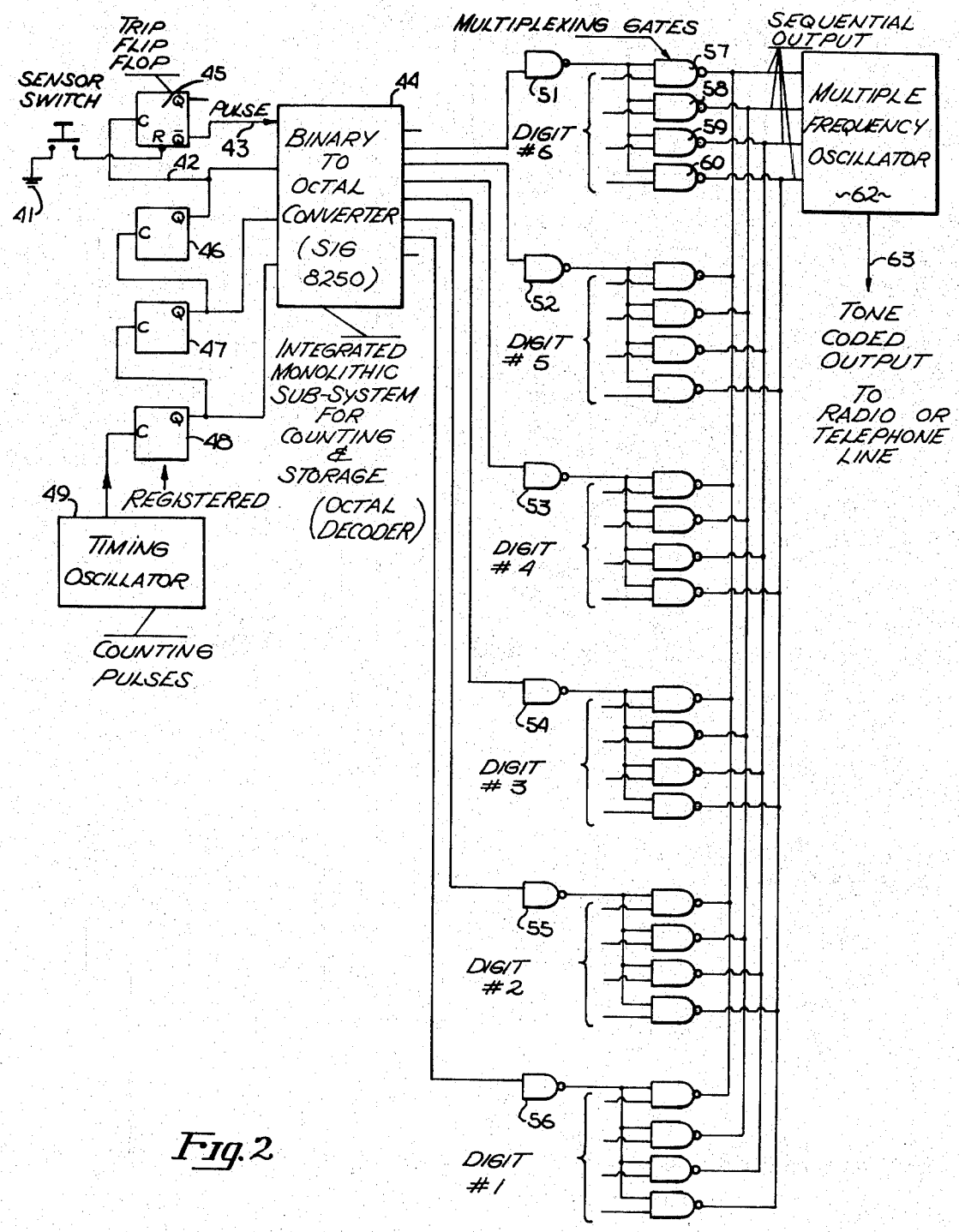

Fig. 2

CECIL JOHN MILLER
INVENTOR.

BY R. E. Geauque
ATTORNEY

DEC. No.	BIT POSITION G1	G2	G3	G4
0	0	0	0	0
1	0	0	0	1
2	0	0	1	0
3	0	0	1	1
4	0	1	0	0
5	0	1	0	1
6	0	1	1	0
7	0	1	1	1
8	1	0	0	0
9	1	0	0	1
10	1	0	1	0
11	1	0	1	1
12	1	1	0	0
13	1	1	0	1
14	1	1	1	0
15	1	1	1	1

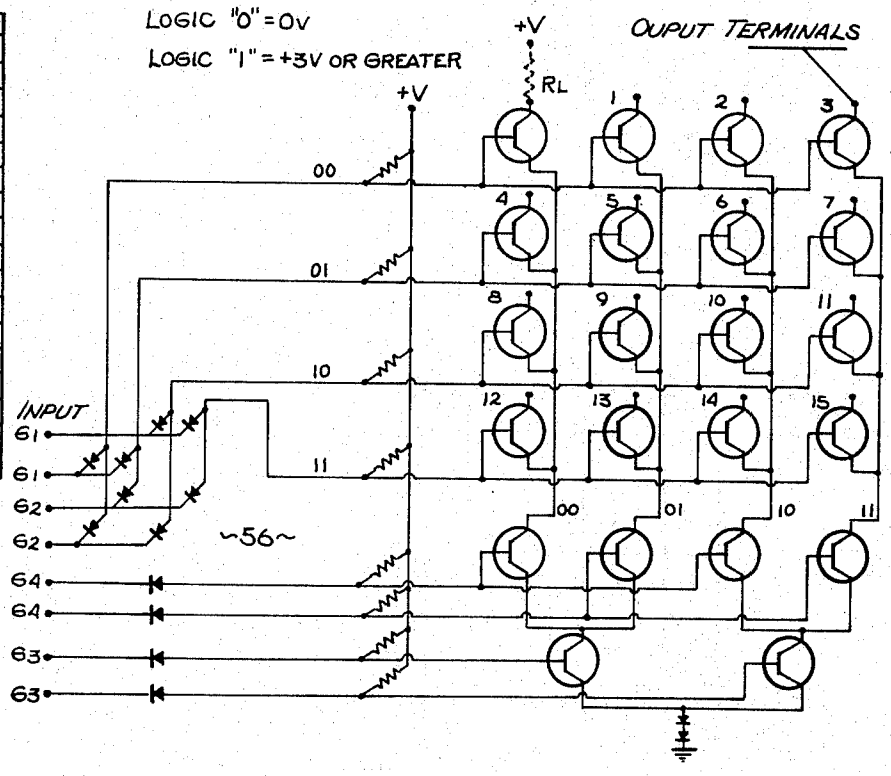

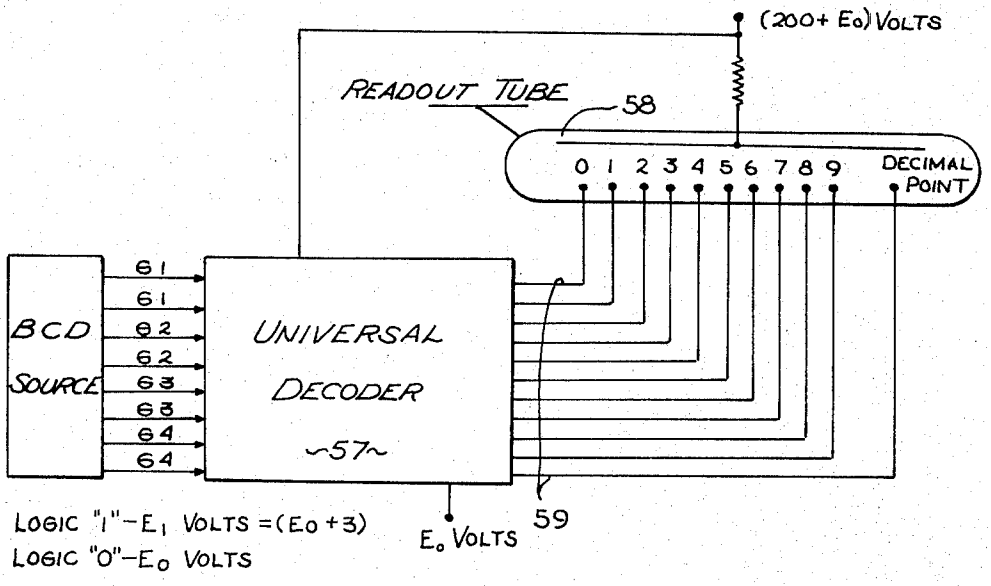

Fig. 3

CECIL JOHN MILLER
INVENTOR.

BY R. E. Beaugue
ATTORNEY

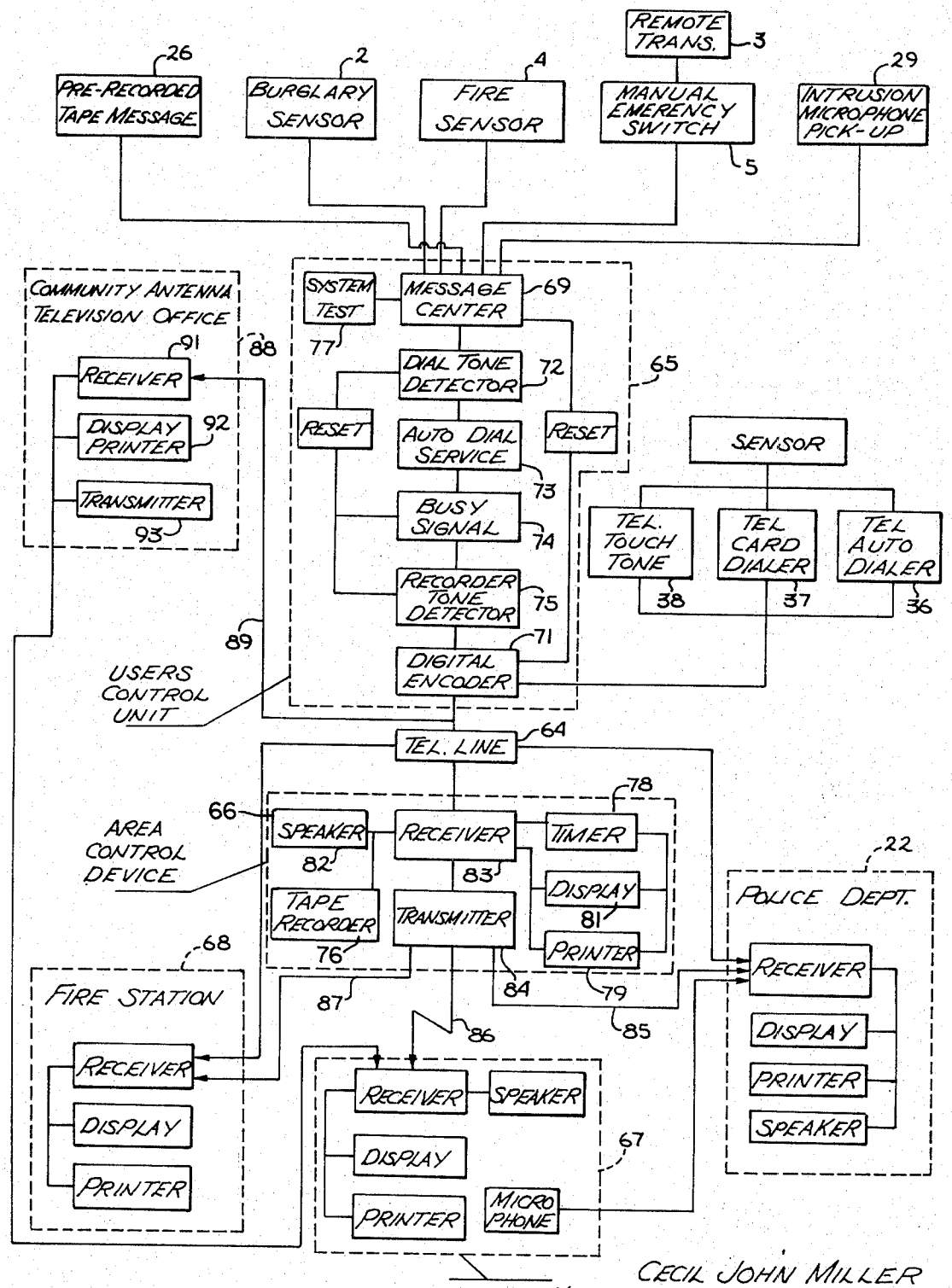

Fig. 4

CECIL JOHN MILLER
INVENTOR.

BY R. E. Beaupre
ATTORNEY

ALARM SYSTEM UTILIZING A DIGITAL RADIO LINK

CROSS REFERENCE TO RETAILED APPLICATIONS

This application is streamlined continuation of Ser. No. 794,873, filed Jan. 29, 1969, now abandoned.

BACKGROUND OF THE INVENTION

Many remote-indicating alarm devices have been employed heretofore in law-enforcement communications systems. In general, these devices provide an alarm signal at a central office in response to the activation of an alarm switch or intrusion detector at the premises under surveillance. In response to the alarm signal an operator contacts the police station by telephone, at which time radio communication with law-enforcement offices in a patrol vehicle in the vicinity of the surveyed premises is established in order to affect apprehension of the robber or intruder. The apprehension process cannot start until the police communications control center has processed the alarm call and has located and dispatched an available vehicle to the scene of the crime. It has been found that this process consumes an average of 7 to 12 minutes, during which time 80 percent of the criminals make their escape.

SUMMARY OF THE INVENTION

The present invention relates to an automatic system which significantly reduces the response time between the detection of a crime or an incipient crime and the deployment of the police to the scene of the crime. In accordance with a first embodiment of the invention, a coded signal which identifies the location under surveillance may be automatically transmitted by radio, or by a combination of a wire-radio link, directly to patrol vehicles or helicopters in the general area of the surveyed location. The radio signal received at the patrol vehicle or helicopter is decoded to present numerical and printed data identifying the location of the tripped alarm, thereby permitting the patrol vehicle to proceed directly to the scene of the crime. Thus, the delays now experienced in existing law-enforcement communications systems are obviated.

As will be described in a subsequent part of this specification, the invention may be constructed in a number of embodiments, certain of which include burglary, robbery, fire and other types of emergency sensors which operate in conjunction with address encoding and data transmission equipment to automatically relay an alarm to specified locations where the data are decoded, displayed and printed out, and if desired, presented as a recorded voice message. Other modifications of the invention will also be described hereinafter.

It is therefore an object of the invention to provide a novel and improved alarm system utilizing a coded source identification which is transmitted via a radio link.

Another object of the invention is to provide a novel and improved radio communications system including a mobile radio receiver having demodulating and decoding means therein for displaying and printing the address of an activated remote alarm.

These and other objects of the invention will be more readily understood by making reference to the description which follows and to the related drawings.

BRIEF DESCRIPTION OF THE DRAWINGS

FIG. **1** is a block diagram of a first embodiment of the invention.

FIG. **2** is a detailed schematic diagram of the location encoder portion of the system of FIG. **1**, utilizing a digital coding technique.

FIG. **3** is a schematic diagram of the decoder and display portion of the system of FIG. **1**.

FIG. **4** is a block diagram of a second embodiment of the invention wherein an intermediate telephone link is employed.

DESCRIPTION OF THE PREFERRED EMBODIMENTS

Referring to FIG. **1** there is shown a block diagram of a first embodiment of the invention, and which comprises a plurality of input signal devices. These may include a hidden switch **1** of the type which may be secretly closed by the intended victim of a robbery. Such a switch may be any of the suitable and well-known types employed in tellers or cashiers cages, under the counter in stores, or similar installations well-known to those versed in the art. For the protection of unattended premises, a burglary intrusion sensor **2** may be used to generate the input alarm signal to the system. These detection devices may comprise proximity switches, trip wires, photoelectric surveillance devices, foil continuity-sensing circuits and the like commonly employed in burglar alarm systems. Additionally, an individual who is to be protected against robbery, such as a cashier, may carry a remote control device **3** on their person which is capable of initiating an electrical or ultrasonic signal upon command. Alternatively, a fire sensor **4** and/or other type of emergency detection device such as manual emergency switch **5** may serve as the input to the system. Such devices are well-known in the art. The particular construction of the alarm sensor or alarm initiating switch is merely incidental to the invention, as will appear.

The initiation of an alarm signal from switch **1**, detection device **2**, remote control device **3**, fire sensor **4**, or switch **5** will supply a signal on line **6** to the location encoding device **7**. The address or location of the protected person or place is encoded, typically as a six digit number (as will be described in detail later) and transmitted on line **8** to radio transmitter **9**. That is, the location or address of the premises is stored in the encoding device **7** and is transmitted by transmitter **9** whenever the system is activated by a signal on line **6**. Details of the encoding device **7** will be given in a subsequent portion of this specification.

Radio transmitter **9** automatically broadcasts the location code appearing on line **8** for an interval sufficient to permit reception and recording at a mobile receiving unit. In a preferred construction, transmitter **9** employs frequency shift modulation for the transmission of the address code. The transmitted code is picked up by radio receiver **11** which is preferably located in a mobile vehicle, such as a patrol car or helicopter patrolling the general area in which the protected premises are located. The radio link between

transmitter **9** and receiver **11** is indicated at **12**. The receiver output on line **13** is demodulated and decoded by a suitable demodulatory decoding device **14**, the construction of which will be described hereinafter. The decoded output on line **15** is displayed in arabic numerals on display device **16** and/or printed out on printer **17**.

Any suitable line code may be employed in the data channel (**15**) between decoding device **14** and output device **16** or **17**. Also, an audible signalling device, such as buzzer **18**, may be energized via line **19** whenever a signal is being picked up by receiver **11**. This will alert the personnel in the patrol vehicle to an incoming address signal which should be investigated.

If desired, the system may be extended to include an additional radio receiver **21**, located at the police station **22**. This receiver **21** is responsive to the digital code transmitted by radio link **23** from transmitter **9** in addition to radio transmitting equipment (**11**) in the patrol vehicle. The received digital location code is demodulated, decoded and displayed by means of display device **24** and/or printed by printer **25**. This will permit simultaneous reception at the patrol vehicle and the station **22** for over-ride monitoring control.

A tape recorded verbal message may be contained in device **26** and transmitted in lieu of the digital location code from device **7**. That is, in response to one or more of the sensor devices **1–5**, the location of the actuated sensor may be verbally played back from a recorded tape in the tape playback device **26**. This message is transmitted via radio transmitter **9** to receiver **11** where it is reproduced via speaker **27**.

Receiver **21** is also provided with a speaker **28** to reproduce the received recorded location message from device **26** and transmitter **9**.

When activated by an intruder, intrusion noises may be picked up at the site of the protected premises by microphone pick up **29** and broadcast in the same manner as the above-described recorded message, for ultimate reproduction through speaker **27** and/or **28**.

Fires are immediately detected by fire sensor **4** and an alarm signal is via the location encoding device **7** and transmitted directly to the nearest fire station **31** by radio link **32**. Digital receiver **33** decodes and reads out the site location of the fire by means of display device **34** and/or printer **35**.

The site or location code may be generated by an automatic telephone dialer **36**, a telephone card dialer **37**, or a touch-tone telephone **38**, in addition to (or in lieu of) the previously described location encoding device **7**. As in the first-described case, the code is generated in response to one of the emergency sensors **1–5**. The received telephone-type code is decoded to indicate the origin of the activated emergency sensor **1–5**.

The emergency sensors, in addition to those specifically enumerated above, may comprise suitable and well-known manually operated switches for use in medical or other types of emergencies. In this regard, an ultrasonic or radio remote control transmitter may be used to initiate the emergency signal.

Referring to FIG. **2** there is shown a schematic diagram of a device suitable for encoding the address location. The multiplexer shown in FIG. **2** corresponds to the block identified as "location encoding device **7**" in FIG. **1**. The apparatus shown will generate a six-digit number in response to closure of the sensor switch **1**. This will close a path to ground **41** and trip flip-flop **45**. This action will send a pulse on line **43** to the binary to octal converter **44**. Counting or timing pulses from oscillator **49** will be registered in the serially connected flip-flops **48, 47, 46** and **45**. As each flip-flop is tripped, it will send a pulse to the converter **44**, which in turn supplies an output to appropriate ones of gates **51–56**. These gates in turn provide outputs to multiplexing gates, a typical set of which are identified as **57–60**. The sequential outputs from these gates is supplied to multiple-frequency oscillator **62**, the tone-coded output of which appears on line **63** for transmission to the radio transmitter or transmission channel.

Typically, the first digit of the six-digit number identifies the geographic sector; the second digit describes the type of service required, and the remaining four digits describe the specific location of the activated sensor.

In addition to the digital encoding technique described in connection with FIG. **2**, other well-known tone-encoding techniques may be utilized.

The tone modulated signal from radio transmitter **9** is received by radio receiver **11** located in the patrol vehicle. The received signal is detected, demodulated and supplied as a decoder which converts it to a parallel line code. The output of the decoder **14**, appearing on line **13** directly drives a display device such as a numerical readout tube where it may be seen by the operator. As will be apparent to those versed in the art, a plurality of readout tubes will be employed in cascade, depending upon the required number of decimal places needed to display the transmitter site or address identification which directs the patrol officer to the site of the activated intrusion detection device.

If desired, the radio receiver **11** may be equipped to provide a printed output of the transmitted site address in addition to the visual numerical display. Other modifications within the scope of the claimed invention will appear to those skilled in the art.

Referring to FIG. **4**, there is shown a second embodiment of the invention, whereby burglary, robbery, emergency and fire sensors, microphone pick up of intrusion noises, pre-recorded emergency tape messages, telephone automatic dialing, touch-tone and card dialer devices are automatically coupled to a conventional telephone line **64**. A user's control device **65** relays the signal to an automatic area control device **66**, which in turn automatically transmits by radio to a patrol car, helicopter (**67**) or fire station **68**, where the encoded information is displayed and printed and the voice information is monitored. This arrangement permits a major cost reduction to the user in that hundreds of user's units **65** share a single transmitter in the area control unit.

The user's control unit **65** comprises a message center **69** which accepts input signals from the various sensors (e.g., **2–5**) and directs them to a digital encoder **71** for transmission over telephone line **64**.

The message center **69** determines which sensor is activating the control unit **65** and determines the digital code to be sent.

The dial tone detector **72** detects the occurrence of a telephone dial tone.

The automatic dialer **73** automatically dials a preselected number.

The busy signal detector **74** automatically resets the circuit back to the detector **72** when the line is busy.

The recorder tone detector **75** determines if the recorder **76** in the area control device **66** is recording and sets back until the recorder **76** is ready.

The digital encoder **71** transmits and resets the circuit back to the message center **69** after the digital code is sent, so that the control unit is again ready for the sender message.

The system test unit **77** periodically tests the operation of the system.

The timer unit **78** in the area control device provides an indication of the time of day when the messages are received.

The teletype printer **79** provides time, station number and message information.

The display unit **81** provides a visual display of the location address.

The speaker **82** is utilized to monitor intrusion noises.

A single receiver **83** and a single transmitter **84** may service a large number of user's control units (e.g., **65**) since they are connected to the area control device **66** via standard telephone lines **64**. The radio link **85–87** to the police station **22**, vehicle **67**, and/or fire station **68** is the same as described in the first embodiment.

Still another modification of the system employs the use of a community antenna television office **88** which is directly linked to the output of the user's control unit **65** via CATV, coaxial line **89**. The CATV office **88** receives the coded date on line **89** at receiver **91**, monitors it by means of display printer **92** and then broadcasts it by means of radio transmitter **93**. The broadcast signal is received at the mobile unit (**67**) in the same manner as the previously described radio link (viz., **85–87**).

Thus, the burglary, robbery, emergency and fire sensors, microphone pick up of intrusion noises, prerecorded emergency tape messages, telephone automatic dialing, touch-tone and card dialer devices are automatically coupled to a conventional telephone line by a novel user's control device **65** and relayed directly to police stations **22**, fire stations **68**, community antenna television headquarters **88** and private patrols where the encoded information is displayed and printed, and the voice information is monitored on speakers. Voice communication may be established with mobile units in the manner previously described.

What is claimed as new in support of Letters Patent is:

1. An alarm system comprising:

means for generating a discrete alarm signal at a protected site in response to the occurrence of an emergency event;

encoding means connected to said alarm signal generating means at said site and responsive to the initiation of said alarm signal for generating a digital code uniquely identifying the location of said site;

radio transmitting means at a fixed location remote from said protected site for broadcasting the output of said encoding means;

a telephone transmission line interposed between said protected site and said radio transmitting means;

automatic telephone dialing means for interconnecting said encoding means and said radio transmitting means via said telephone transmission line whenever said encoding means responds to the initiation of said alarm signal, whereby said digital code is supplied to said radio transmitting means;

a mobile radio receiver remote from said fixed location for picking up said digital code broadcast from said transmitting means;

first digital decoding means connecting to said receiver, and responsive to the output therefrom, for converting said digital code to a geographic address code corresponding to the location of said protected site; and

means connected to the output of said first digital decoding means and responsive thereto, for displaying said geographical address code.

2. An alarm system as defined in claim **1** including:

means for selectively modifying said digital code generated by said encoding means so as to permit an arbitrary identification of said site.

3. An alarm system as defined in claim **1** wherein said means for displaying said digital code includes:

means for converting said broadcast code to a digital code differing from the digital code generated by said encoding means.

4. An alarm system as defined in claim **1**, including:

second digital decoding means connected to said telephone transmission line at said fixed location for converting the digital code supplied via said telephone transmission line to a geographic address code corresponding to the location of said protected site; and

means connected to the output of said second decoding means, and responsive thereto, for displaying said geographic address code.

5. An alarm system as defined in claim **1**, including:

automatic printer means connected to the output of said first digital decoding means, and responsive thereto, for recording said geographic address code.

6. An alarm system as defined in claim **4**, including:

automatic printer means connected to the output of said second digital decoding means at said fixed location, and responsive thereto, for recording said geographic address code.

7. An alarm system as defined in claim **1** wherein said telephone transmission line comprises a community antenna television coaxial line.

* * * * *