Jan. 22, 1929. 1,699,928

I. I. STONE

CHANGE WEB ROLL DRIVING DEVICE

Filed Dec. 20, 1926

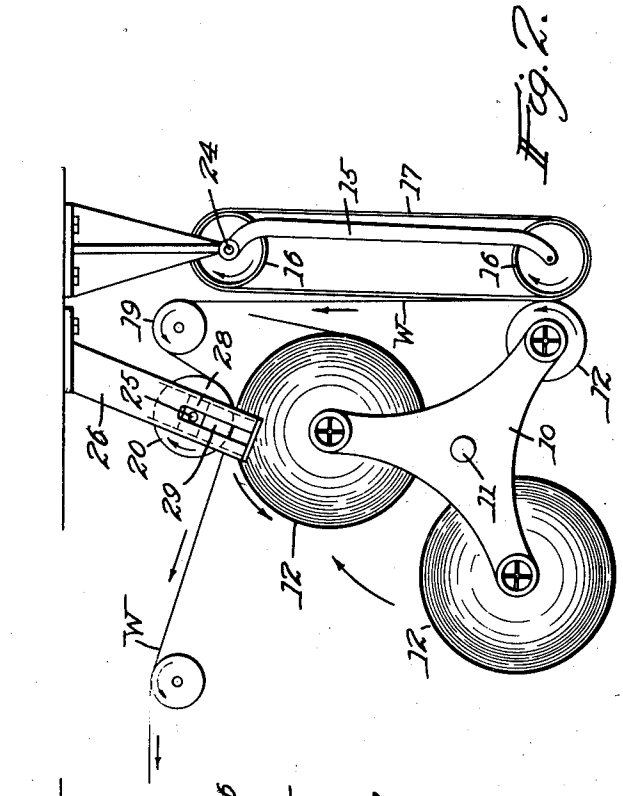

Fig. 2.

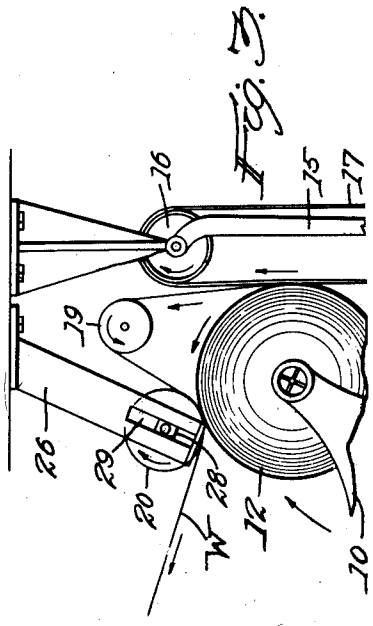

Fig. 3.

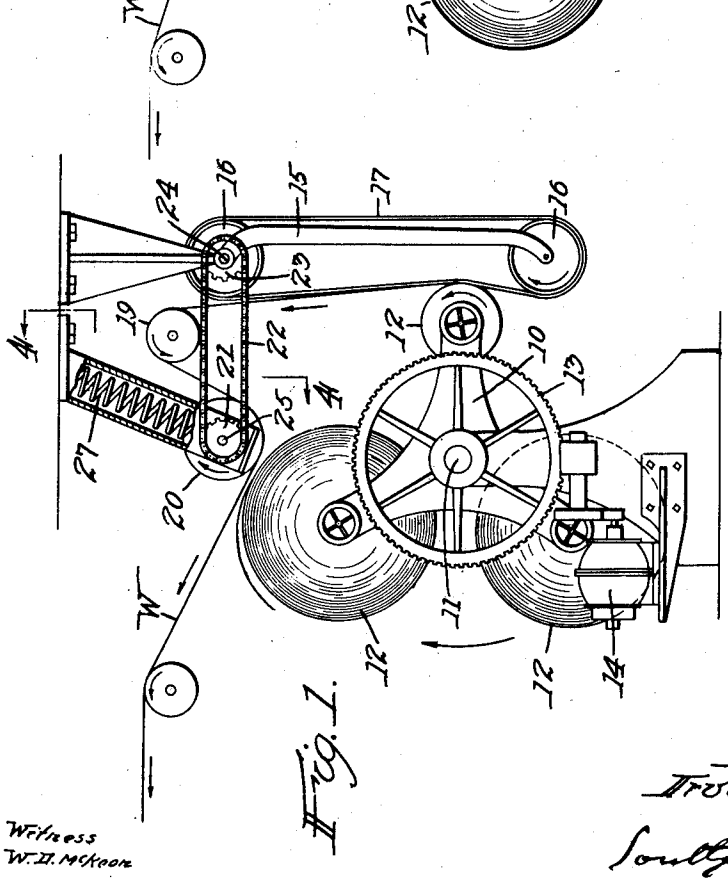

Fig. 1.

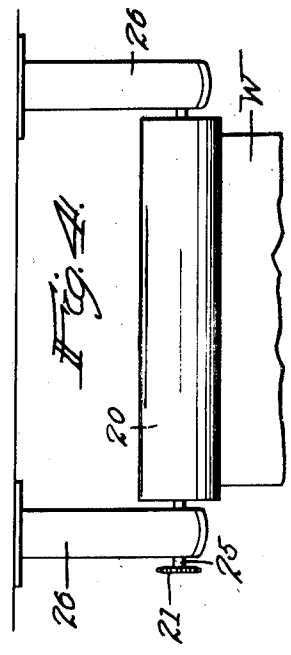

Fig. 4.

Witness
W. H. McKoon

Inventor
Irving I. Stone
By Attorneys
Southgate Fay & Hanley

Patented Jan. 22, 1929. 1,699,928

UNITED STATES PATENT OFFICE.

IRVING I. STONE, OF CHICAGO, ILLINOIS.

CHANGE-WEB-ROLL DRIVING DEVICE.

Application filed December 20, 1926. Serial No. 155,976.

This invention relates to a change web roll construction for printing presses.

The principal objects of the invention are to provide a simple means for driving the new web roll at web speed; to connect this means directly with the web feeding belt driving means so that it will rotate at a surface speed exactly equal to that of the web; and to provide for pressing the driving means against the new web roll in the proper direction to secure the desired pressure under the conditions which exist while the roll is running. Other objects and advantages of the invention will appear hereinafter.

Reference is to be had to the accompanying drawings, in which

Fig. 1 is an end view of a web roll reel and connected parts with a preferred form of my invention applied thereto, shown partly in section and in a position in which it is just about to be applied to the new web roll;

Fig. 2 is a similar view showing the position of the parts shortly afterwards;

Fig. 3 is a similar view showing the attachment of the expiring web to the new web roll; and

Fig. 4 is a sectional view on the line 4—4 of Fig. 1.

In the drawings, I have shown an ordinary reel 10 adapted to rotate about a shaft 11 for supporting the web rolls 12. In this case as shown, the reel is provided with a gear 13 adapted to be operated by a motor 14 to rotate very slowly during the entire operation.

As is customary, I have shown a frame 15 carrying a pair of pulleys 16 on which is a driving belt 17 driven from the press at web speed and engaging the running one of the three rolls 12 to insure the feeding of the web W at web speed from the beginning of its travel. The web passes over a guide roll 19 and under a propelling roll 20. This roll 20 is used for the purpose of engaging the surface of the new web roll and rotating it just before it is brought in position for attachment to the web. It is provided with a gear 21 on its shaft or stud. A chain 22 passes over this gear and a gear 23 on a shaft 24 which is connected with the press, and is the shaft which operates the belt 17. These gears being the same size as the pulley on which the belt 17 is located and the roll being the same size as the pulley, the surface of this roll 20 will run at web speed.

This roll 20 is provided with a shaft 25 which is mounted in slots 29 in a casing 26 and has bearing blocks 28 behind it which are engaged by a spring 27 in the casing 26. These elements are repeated at the other end of the roll of course. These springs force the roll down toward the web roll which is gradually moving toward it, by the rotation of the reel.

When the web roll engages it the roll 20 will bring the surface of the web roll up to web speed by its contact with it. This is done in a gradual manner because it starts the web roll to rotating before it is pressed against it with any great pressure. As the web roll passes along by it, as shown in Fig. 2, the springs will yield and allow for this action, but the roll 20 will be pressed against it more firmly to insure its attaining the full speed of the web.

It will be seen that I have shown the casing 26 as located at an inclination nearly radial with respect to the web roll when the latter is in its position of full contact with it. This is to insure the direction of the pressure approximately toward the center of the web roll and with due regard for the angle between the two sides of the web coming to and going from the roll 20.

In this way it will be seen that the new web roll can be brought up to web speed without attention on the part of the operator and that, when its pasted end is to be attached to the expiring web from the running web roll at the right, it will reach the position shown in Fig. 3 for that operation. Then it will pass under the control of the belt or belts 17 and out of contact with the roll 20. When the web on the new roll with the adhesive paste upon it strikes the web from the nearly exhausted roll the pasting is finished and the web continues to run at full speed. No interruption in the speed of the web has been necessary and no time has been lost in the operation.

Although I have illustrated and described only a single form of the invention I am aware of the fact that changes can be made therein by any person skilled in the art without departing from the scope of the invention as expressed in the claims.

Therefore I do not wish to be limited to the exact form shown, but what I do claim is:—

1. In a web roll supply device, the combination with a reel for supporting the running roll and the fresh web roll, of a roll

located in the path of the fresh roll toward running roll position, means for driving said roll at web speed constantly, means for guiding the web over the surface of said roll, and yielding means for forcing the roll against the surface of the fresh web roll, whereby said roll can move back when the fresh roll passes it and still at all times remain in contact therewith for controlling the speed of rotation of the fresh web roll independently of variations in size thereof.

2. In a web roll supply device, the combination with a reel for supporting the running roll and the fresh web roll, and means for rotating the reel, of a roll located in the path of the fresh roll toward running roll position, means for driving said roll at web speed constantly, and yielding means for forcing the roll against the surface of the fresh web roll, whereby said roll can move back when the fresh roll passes it and still be driven thereby while the reel rotates.

3. In a web roll supply device, the combination with the running roll, the fresh roll, a belt for feeding the web at full speed from the running roll, and means for running the belt, of a roll adapted to come into contact with the fresh roll, means directly operated from the belt running means for rotating the said roll at a surface speed equal to web speed, and yielding means at both ends of the roll for forcing it against the fresh roll in a general radial direction even when the fresh roll changes its position, said roll rotating means remaining in operation as the fresh roll moves.

In testimony whereof I have hereunto affixed my signature.

IRVING I. STONE.