C. A. JOHNSON.

SHOE TREE AND STRETCHER.

APPLICATION FILED OCT. 16, 1909.

953,747. Patented Apr. 5, 1910.

Fig. 1.

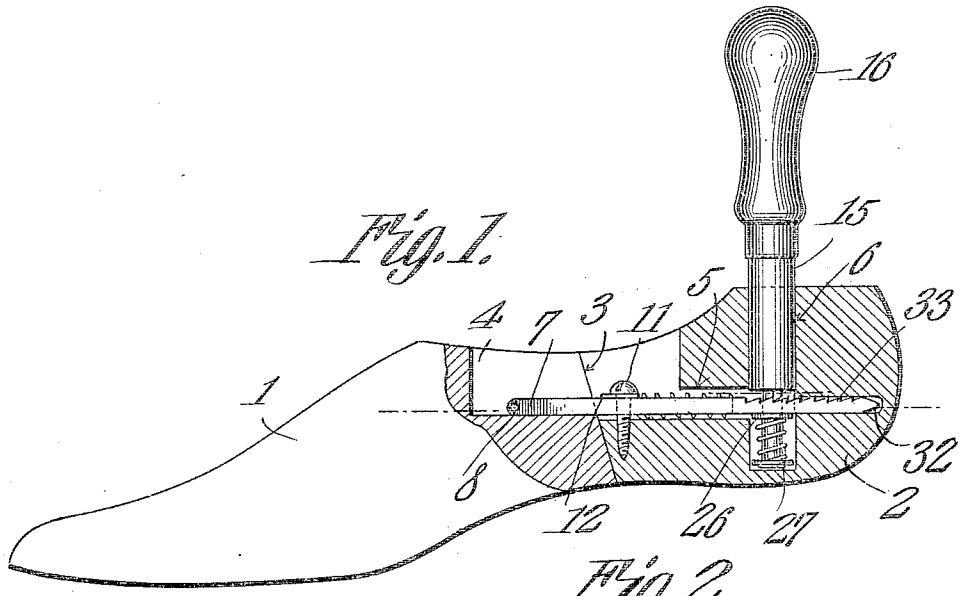

Fig. 2.

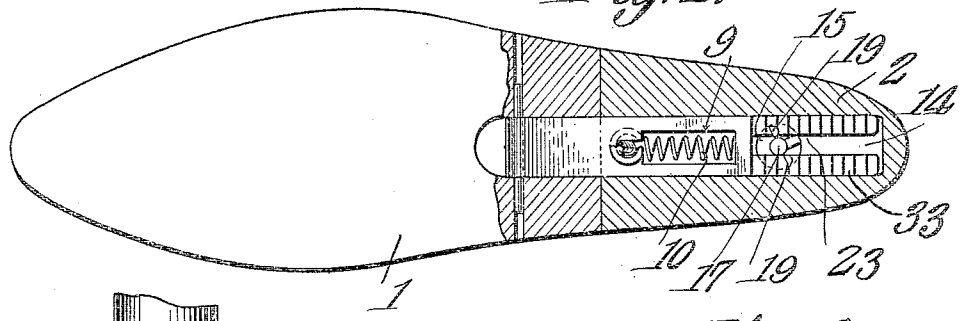

Fig. 3.

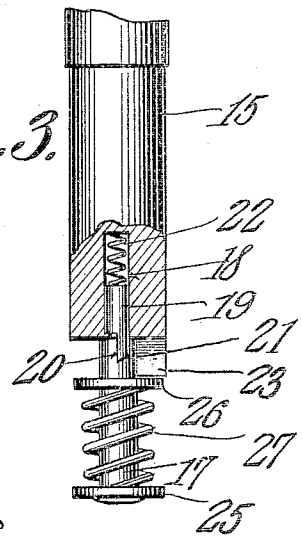

Fig. 4.

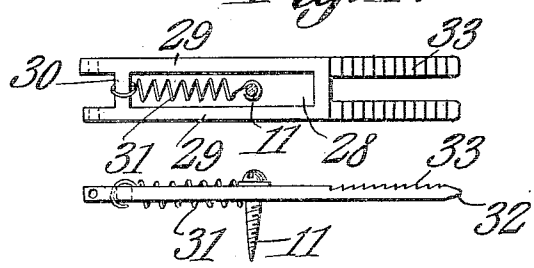

Fig. 5.

Inventor

Charles A. Johnson.

Witnesses

E. F. Hewitt

Mason B. Lawton

By C. A. Snow & Co.

Attorneys

ANDREW B. GRAHAM CO., PHOTO-LITHOGRAPHERS, WASHINGTON, D. C.

UNITED STATES PATENT OFFICE.

CHARLES A. JOHNSON, OF EVERETT, MASSACHUSETTS, ASSIGNOR TO CHARLES A. BATCHELDER, OF ST. ALBANS, MAINE.

SHOE TREE AND STRETCHER.

953,747. Specification of Letters Patent. Patented Apr. 5, 1910.

Application filed October 16, 1909. Serial No. 523,034.

To all whom it may concern:

Be it known that I, CHARLES A. JOHNSON, a citizen of the United States, residing at Everett, in the county of Middlesex and State of Massachusetts, have invented a new and useful Shoe Tree and Stretcher, of which the following is a specification.

The objects of the invention are, generally, the provision, in a merchantable form, of a device of the class above specified which shall be inexpensive to manufacture, facile in operation and devoid of complicated parts; specifically, in a shoe tree and stretcher comprising a toe and a heel, the provision of novel means for separating the toe from the heel, and of novel means for imparting step by step movement to the means whereby the toe and heel are separated; other and further objects being made manifest hereinafter as the description of the invention progresses.

The invention consists in the novel construction and arrangement of parts hereinafter described, delineated in the accompanying drawings, and particularly pointed out in that portion of this instrument wherein patentable novelty is claimed for certain distinctive and peculiar features of the device, it being understood that, within the scope of what hereinafter is thus claimed, divers changes in the form, proportion, size and minor details of the structure may be made without departing from the spirit or sacrificing any of the advantages of the invention.

Similar numerals of reference are employed to denote corresponding parts throughout the several figures of the drawings.

In the accompanying drawings:—Figure 1 shows my invention in vertical longitudinal section, parts being left in elevation; Fig. 2 is a top plan thereof, parts being broken away better to illustrate the structure; Fig. 3 shows in vertical transverse section the rock-shaft and the mechanism which is assembled therewith; Fig. 4 is a top plan of a modified form of rack-bar; Fig. 5 is a side elevation of the rack-bar shown in Fig. 4.

The last is composed of two separable sections, a toe 1, and a heel 2, the line of separation between the toe and the heel being indicated in Fig. 1 by the numeral 3. Upon their upper surfaces the toe and the heel are centrally cut away, as denoted by the numeral 4, and the heel 2 is undercut rearwardly from the portion 4 to form a channel 5. The upper surface of the heel 2 is provided with a circular aperture 6, which extends downward, crossing, and terminating below the channel 5.

The forward end of the rack-bar 7 is pivotally mounted in the opening 4 of the toe 1 upon a transverse pintle 8, and extends rearwardly into the channel 5 in the heel 2. Intermediate its ends the rack-bar 7 is centrally cut away, as denoted by the numeral 9, and in this centrally cut away portion is mounted a compression spring 10, one end of which abuts against the rack-bar at the rear of the portion 9, the other end being arranged to abut against the screw 11, passing through the centrally cut away portion 9 of the rack-bar 7 into engagement with the heel 2 at the bottom of the opening 4, a washer 12 being interposed between the head of the screw 11 and the upper face of the rack-bar 7.

At its rear end the rack-bar 7 is slotted, as shown at 14, and this slot is disposed beneath the circular aperture 6 in the heel 2. The rock-shaft 15 is slidably and rotatably mounted in the aperture 6 in the heel 2, and at its lower end it is diminished, as denoted by the numeral 17, said diminished portion being arranged to extend downward through the slot 14 at the rear of the rack-bar and into that portion of the circular aperture 6 which lies below the channel 5 in the heel. The rock-shaft 15 is provided at its upper terminal with a suitable handle 16, and in the lower face of its larger or undiminished portion are located diametrically disposed chambers 18, the positions of which are clearly indicated in Fig. 2 by the pawls 19, which are slidably mounted therein. Referring now particularly to Fig. 3, it will be seen that these pawls 19 are diminished at their lower ends to form a forwardly disposed flat face 20, their lower extremities being rearwardly beveled, as denoted by the numeral 21, the faces 20 and 21 of the pawls conforming to the contour of the rearwardly sloping teeth 33, which cross the rack-bar 7 adjacent its rear end. A compression spring 22 is mounted in the chambers 18 above the pawl 19, and serves to actuate the pawl to a downward movement. Located midway between the pawls 19 and at the periphery of the

lower face of the larger portion of the rack-bar is a depending lug 23, adapted to register in the slot 14 of the rack-bar. The diminished portion 17 of the rock-shaft carries a compression spring 27, one terminal of the said spring bearing against a washer 26, which is slidably mounted upon the diminished portion 17 of the rock-shaft, and the other terminal of said spring bearing against a washer 25, which is rigidly attached to the lower extremity of the portion 17.

In practical operation, the heel 2 may be raised upward above the toe 1, the parts pivoting at 8, and in this position the last may be introduced into the shoe, the heel then being pushed downward to engage the toe along the line 3 of Fig. 1. The parts being in the position shown in Fig. 1, the handle 16 may be grasped and the rock-shaft 15 given oscillatory rotation. As the rock-shaft 15 is thus oscillated, first one and then the other of the pawls 19 will engage the teeth 33 of the rack-bar, causing the said rack-bar to advance, whereby the toe 1 will be separated from the heel 2, the shoe within which the device is mounted being stretched in the process. The springs 18 serve to actuate the pawls 19 and to hold them in a position operative at all times to engage the teeth of the rack-bar 7. This spring 18, moreover, will yield as the rock-shaft is oscillated, so that first one and then the other of the pawls may ride up and over the teeth of the rack-bar, and secure a new hold. The rack-bar is held at all times in contact with the lower terminals of the pawls by means of the spring 27, which is mounted upon and about the diminished lower terminal of the rock-shaft. The lug 23, which registers in the slot 14 of the rack-bar serves to limit the rotary oscillating movement of the rock-shaft as the pawls 19 are moved from tooth to tooth upon the rack-bar, the function of the lug 23 being most clearly shown in Fig. 2. When it is desired to restore the toe 1 and the heel 2 to their normal positions, after the shoe has been stretched, it is necessary merely to pull upward on the handle 16 of the rock-shaft. The spring 27 will thereby be compressed, the pawls 19 being lifted free from the teeth of the rack-bar 7. The spring 10, in the case of Figs. 1 and 2, and the spring 31, in the case of Figs. 4 and 5, will thereupon draw the heel and the toe together, whereupon the device will be in position for another stretching operation.

So far as I am advised as to the state of the art, it is customary, in devices of the character herein described, to provide for the separation of the toe and the heel, a common rack and pinion, or other means whereby a continuous forward movement is imparted to the rack-bar. This construction is fraught with many disadvantages. In handling a device of the character last above described, the operator puts the pressure too suddenly upon the shoe, resulting in fractures of the stitching or of the leather of which the upper is composed. This difficulty I obviate by the mechanism herein described and disclosed. In the present device, the pressure is not applied to the shoe continuously, but by a step by step mechanism, whereby the stretching pressure upon the shoe may gradually be increased. In the case of the present device the pressure may be increased by distinct and predetermined degrees, and the stretching process may be stopped at any point, so that the effect of the stretching pressure may be examined, and it will be noted that after the stretching pressure is discontinued the parts remain securely locked until the rock-shaft is further oscillated.

In Figs. 4 and 5 I have shown a modified form of rack-bar. The rack-bar shown in Figs. 4 and 5 is provided with a slot 28, forming the arms 29 of the rack-bar. These arms 29 are connected by a transverse cross-piece 30 and a spring 31, has one of its ends made fast to the cross-piece 30, its other end being made fast to the screw 11. In the form shown in Figs. 1 and 2 the toe 1 and the heel 2 are drawn together by means of the expansion of the spring 10. In the form shown in Figs. 4 and 5 the toe 1 is drawn toward the heel 2 by the contraction of the spring 31.

In order that the rack-bar 7 may readily be assembled with the other parts of the device, the terminal of the said rack-bar is flattened or tapered, as denoted by the numeral 32, in order that it may readily engage and force downward the washer 26, when it, the said rack-bar, is introduced into the channel 5 in the heel.

Having thus described my invention, what I claim as new, and desire to protect, by Letters Patent, is:—

1. A device of the class described comprising a toe; a heel; a shaft rotatably mounted in the heel and arranged to be rocked in a fixed axis; and means connected with the toe and engageable by the shaft in its rocking movement to separate the toe from the heel.

2. A device of the class described comprising a toe; a heel; a shaft rotatably mounted in the heel and arranged to be rocked in a fixed axis; means connected with the toe and engageably by the shaft in its rocking movement, to separate the toe from the heel; said means and the shaft being provided with interlocking elements to limit the rocking movement of the shaft.

3. A device of the class described comprising a toe; a heel; a rack bar terminally mounted in the toe and positioned to extend into the heel; a shaft rotatably mounted in the heel and arranged to be rocked in a

fixed axis to engage the rack bar to separate the toe from the heel; the shaft and the rack bar being provided with interlocking elements to limit the rocking movement of the shaft.

4. A device of the class described comprising a toe; a heel; a slotted rack bar terminally mounted in the toe and positioned to extend into the heel; a rock shaft mounted in the heel and terminally extended through the slot in the rack bar, the shaft having means to engage the rack bar to separate the toe from the heel; and a resilient element carried by the terminal of the shaft and engageable by the rack bar to hold the rack bar operatively in engagement with said means.

5. A device of the class described comprising a toe; a heel; a rack-bar terminally mounted in the toe and positioned to extend into the heel; a shaft rotatably mounted in the heel and arranged to be rocked in a fixed axis to impart step-by-step movement to the rack-bar to separate the toe from the heel.

6. A device of the class described comprising a toe; a heel; a rack-bar terminally mounted in the toe and positioned to extend into the heel; a rock-shaft rotatably mounted in the heel and arranged to impart step-by-step movement to the rack-bar to separate the toe from the heel; means for disengaging the rock-shaft from the rack-bar; and resilient means for retracting the toe toward the heel.

7. A device of the class described comprising a toe; a heel; a rack-bar terminally mounted in the toe and positioned to extend into the heel; a rock-shaft rotatably mounted in the heel; and spring-actuated pawls carried by the rock-shaft and arranged to engage successively the rack-bar upon the rotation of the rock-shaft.

8. A device of the class described comprising a toe; a heel; a slotted rack-bar mounted in the toe and positioned to extend into the heel; a rock-shaft rotatably mounted in the heel and arranged to impart step-by-step movement to the rack-bar; the rock-shaft being provided with a depending lug to register in the slot of the rack-bar to limit the rotation of the rock-shaft.

9. A device of the class described comprising a toe; a heel; a slotted rack-bar terminally mounted in the toe and positioned to extend into the heel; a rock-shaft mounted in the heel and arranged to advance the rack-bar to separate the toe from the heel; the rock-shaft being provided with a depending lug to register in the slot of the rack-bar to limit the rotation of the rock-shaft.

10. A device of the class described comprising a toe; a heel; a slotted rack-bar mounted in the toe and positioned to extend into the heel; a rock-shaft rotatably mounted in the heel; spring-actuated pawls carried by the rock-shaft and arranged to engage successively the rack-bar upon the rotation of the rock-shaft; the rock-shaft being provided with a depending lug to register in the slot of the rack-bar to limit the rotation of the rock-shaft.

11. A device of the class described comprising a toe; a heel; a slotted rack-bar terminally mounted in the toe and positioned to extend into the heel; a rock-shaft rotatably mounted in the heel; spring-actuated pawls carried by the rock-shaft and arranged to engage the rack-bar; the rock-shaft being provided with a depending lug to register in the slot of the rack-bar to limit the rotation of the rock-shaft.

In testimony that I claim the foregoing as my own, I have hereto affixed my signature in the presence of two witnesses.

CHARLES A. JOHNSON.

Witnesses:
C. HOHNGREN,
EMIL JOHNSON.