United States Patent [19]

Mayhew

[11] **3,808,033**

[45] **Apr. 30, 1974**

[54] **CONTINUOUS METALLIC STRIP HOT-DIP METAL COATING APPARATUS**

[75] Inventor: **John T. Mayhew,** Toronto, Ohio

[73] Assignee: **National Steel Corporation,** Pittsburgh, Pa.

[22] Filed: **Mar. 17, 1972**

[21] Appl. No.: **235,766**

Related U.S. Application Data

[60] Division of Ser. No. 6,137, Jan. 27, 1970, and a continuation-in-part of Ser. No. 46,825, June 16, 1970, and a continuation-in-part of Ser. No. 704,193, Nov. 7, 1967, said Ser. No. 6,137, is a continuation of Ser. No. 598,380, Dec. 1, 1966, Pat. No. 3,499,418, which is a continuation-in-part of Ser. No. 409,053, Nov. 5, 1964, abandoned, said Ser. No. 46,825, is a continuation of Ser. No. 757,522, Aug. 27, 1968, abandoned, which is a continuation of Ser. No. 375,264, June 15, 1964, abandoned, said Ser. No. 704,193, is a continuation of Ser. No. 374,953, June 15, 1964, abandoned.

[52] **U.S. Cl.** ..... **117/102 M,** 117/114 A, 118/63, 118/419, 118/421

[51] **Int. Cl.** **B05c 11/10,** B05c 3/02

[58] **Field of Search** ..... 117/102 M, 114 R, 114 A, 117/114 B, 114 C, 64 R; 118/4, 5, 7, 8, 9, 63, 419, 423, 424, 429

[56] **References Cited**

UNITED STATES PATENTS

287,076	10/1883	Young	117/102 M
752,768	2/1904	Goodwin	118/5
811,854	2/1906	Lee	117/102 M
1,672,526	6/1928	Hawkins	117/114 R UX
1,907,890	5/1933	Steckel	117/114 B
2,160,864	6/1939	Hill et al.	117/64 R
2,390,007	11/1945	Sherman	118/63
2,604,415	7/1952	Whitfield et al.	117/114 A X
2,986,808	6/1961	Schnedler	117/114 A X
3,010,844	11/1961	Klein et al.	117/114 A X
3,148,080	9/1964	Mayhen	117/114 A X

Primary Examiner—Ralph S. Kendall

Attorney, Agent, or Firm—Shanley and O'Neil

[57] **ABSTRACT**

Apparatus and method in which streams of gas under pressure are impinged against opposite faces of a continuous metallic strip emerging from a molten coating metal bath to thereby control the final coating weight on the strip, there being close control of the temperature of the molten coating metal in the bath by means of cooling fluid in heat exchange relation with a portion of the molten coating metal in the bath.

6 Claims, 5 Drawing Figures

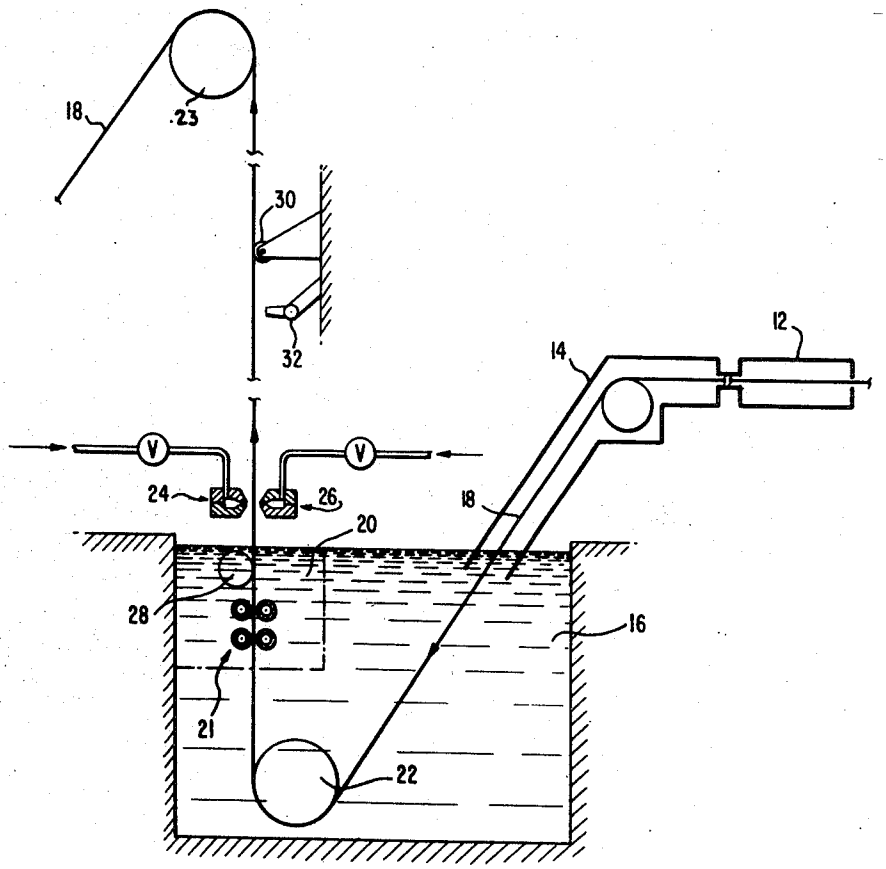

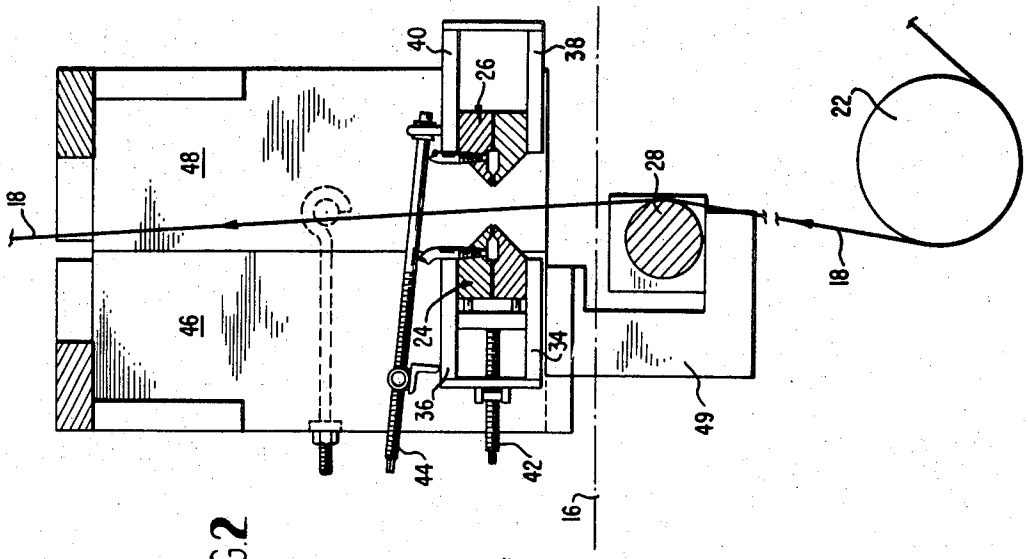
18
48
46
40
38
26
24
34
36
44
42
16
28
22
18
49

FIG. 2

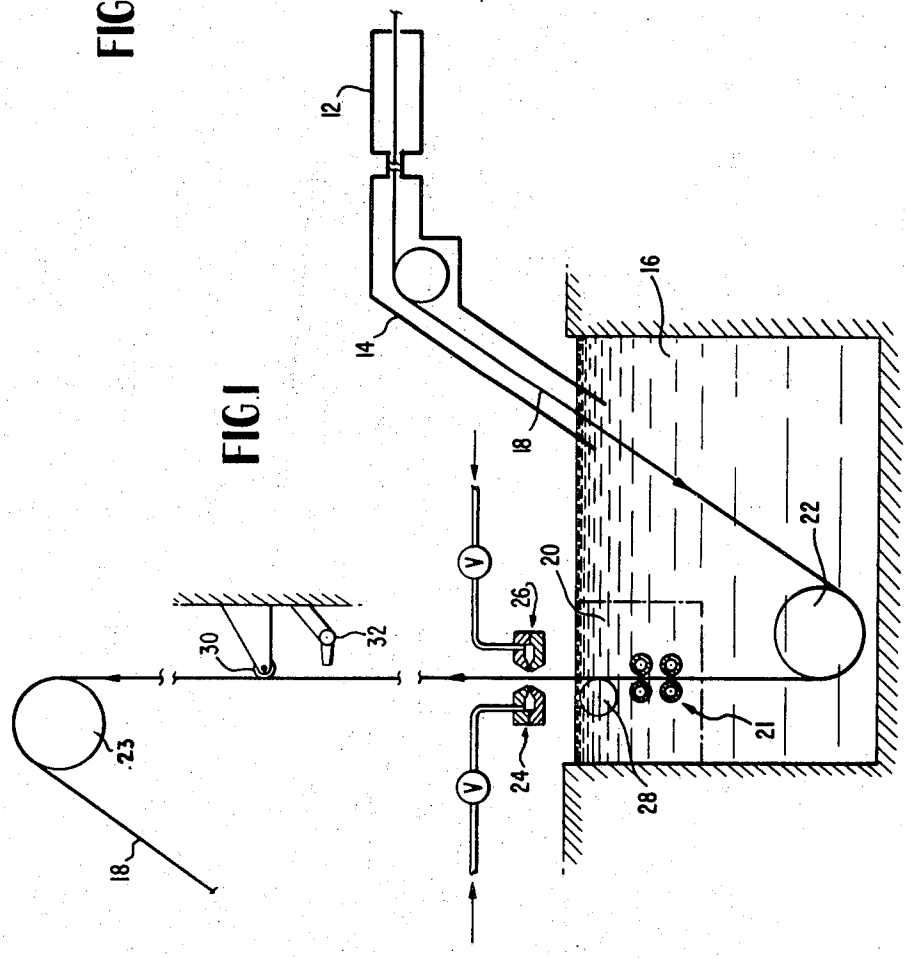
12
14
16
18
22
20
26
30
32
23
18
24
21
28
V
V

FIG. 1

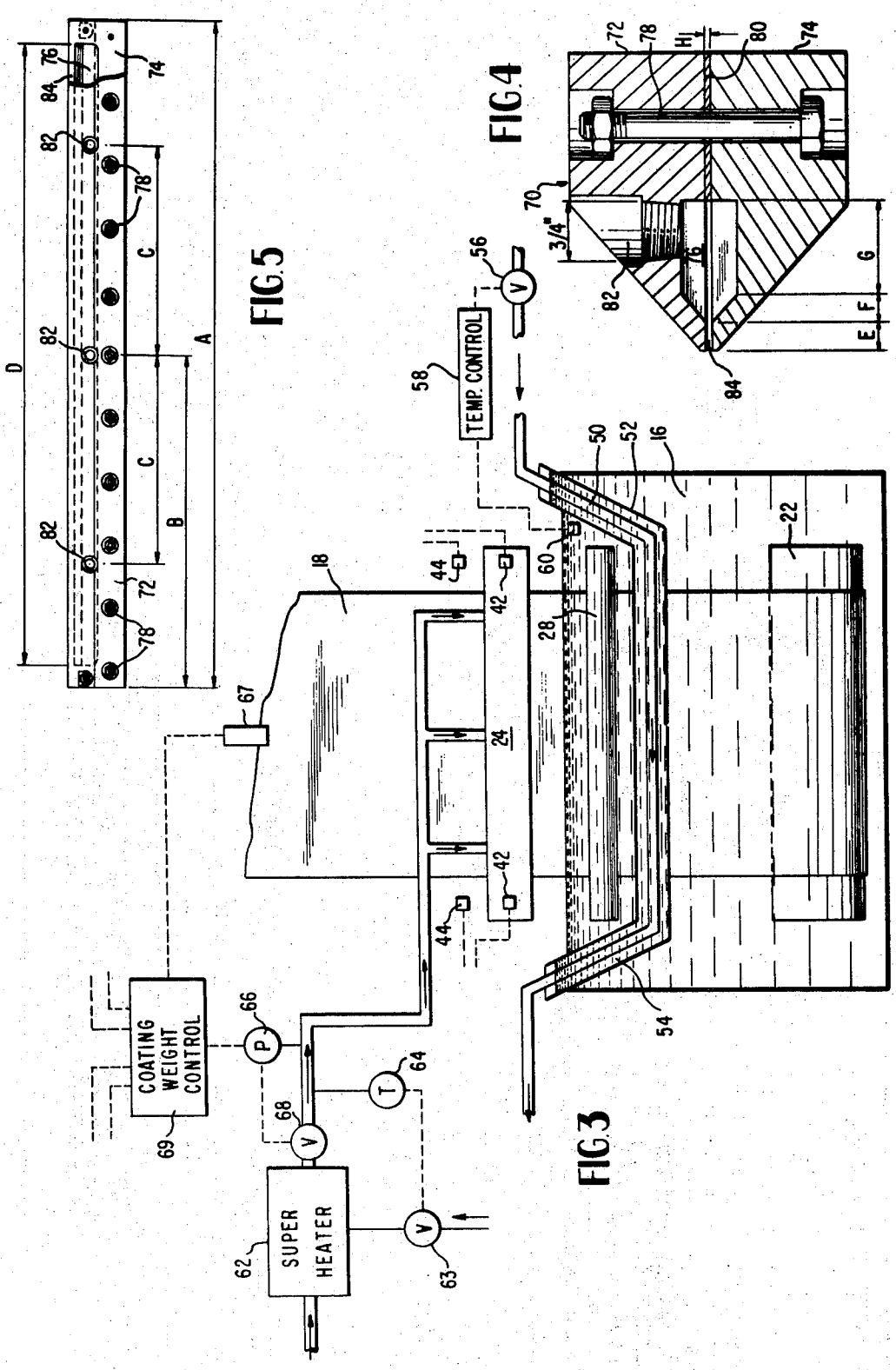
FIG.3
FIG.4
FIG.5
TEMP. CONTROL
COATING WEIGHT CONTROL
SUPER HEATER
3/4"

CONTINUOUS METALLIC STRIP HOT-DIP METAL COATING APPARATUS

CROSS REFERENCES TO RELATED APPLICATIONS

This application is a division of copending application Ser. No. 6,137, filed Jan. 27, 1970, which in turn was a continuation of application Ser. No. 598,380, filed Dec. 1, 1966, now U.S. Pat. No. 3,499,418, which in turn was a continuation-in-part of application Ser. No. 409,053 filed Nov. 5, 1964, now abandoned. The present application is also a continuation-in-part of copending application Ser. No. 46,825 filed June 16, 1970 which is a continuation of Ser. No. 757,522 filed Aug. 27, 1968, now abandoned, as a continuation of patent application Ser. No. 375,264 filed June 15, 1964 and is also a continuation-in-part of copending application Ser. No. 704,193 filed Nov. 7, 1967 as a continuation of patent application Ser. No. 374,953 filed June 15, 1964, application Ser. No. 375,264 and application Ser. No. 374,953 being now abandoned.

BACKGROUND OF THE INVENTION

This invention is concerned with molten metal coating of metal sheet material and in particular relates to a novel method and apparatus which provides faster and more efficient production, better product control and improved product.

Although there have been many highly productive improvements in metal coating operations over the last twenty-five years, molten metal coating itself, especially control of coating weight, has remained essentially the same. Prior to this invention, molten metal coating operations, have relied on mechanical contact with strip at the exit side of a coating bath. This has been a slow cumbersome process, making coating weight control one of the biggest drawbacks and bottlenecks, especially in continuous strip practice.

Since hot-dip zinc and zinc alloy coating, herein termed galvanizing, is the commonest form of molten metal coating operations, the invention will be described in this environment.

The invention makes a radical departure from prior art practice by providing a coating control method and apparatus which accurately determine coating weight in continuous strip galvanizing operations. The coating control method and apparatus of the invention leaves the strip free from the marks and damage occasioned by coating rolls, and the like, eliminates changing and cleaning of such mechanical contact devices, and provides numerous unexpected advantages such as increased line speeds, better operational control, a choice of manual or automatic coating weight control, smoother finish, more uniform coatings, and better corrosion protection with less consumption of coating metal.

There are pronounced contrasts between the teachings of the invention and past theories on wiping coating advanced for hot-dip tinplating. For example, the U.S. Pats. to Steele, No. 850,548, Sebell, No. 2,370,495, Sherman, No. 2,390,007, and the British Pat. specification No. 588,281 disclose use of a liquid or equate use of a liquid and compressed gas in tinplating. There are similar contrasts between the teachings of the invention and the wiping action of a high velocity stream of steam passing between a coated surface and

internal surfaces of a throat to blow excess metal from the surfaces of a material as disclosed in the U.S. Pats. to Underwood, No. 2,080,518, No. 2,095,537 and No. Re. 19,758. Such theories have no application in the galvanizing industry and in fact none of these prior art theoretical disclosures is known to have found practical application in hot-dip metal coating of any kind. In practice, coating rolls, despite their many shortcomings and difficulties, remain in use throughout the strip steel galvanizing industry.

The present invention overcomes these problems by controlling coating with what is herein termed a gaseous barrier. Coating control by gaseous barrier leaves the strip free from the marks and damage occasioned by coating rolls, eliminates changing of rolls and other mechanical problems and provides numerous unexpected advantages such as increased line speeds, better operational control, smoother finish, and so forth, which will be discussed below.

In making a departure from conventional mechanical contact coating control processes difficulties were encountered in obtaining a smooth finish and in maintaining a uniform coating over sustained periods. These difficulties were encountered even though recognized variables in the process were maintained within normal ranges. In solving these problems a significant discovery was made in uncovering a critical relation of certain bath properties to effective control of the coating. With this discovery, uniformly coated product can be readily produced over sustained periods, an objective difficult to obtain under some conditions.

Sustained, high-yield, hot-dip galvanizing operations are made possible in the present invention by critical control of a number of factors. The strip is guided from the bath and passes into a coating control zone with its travel path determined and with strip travel limited to longitudinal movement. The strip is shaped to a desired cross-sectional configuration and coating metal on the strip is in excess of desired final coating weight. A linearly extended, thin stream of compressed and heated gas is impinged substantially perpendicularly against the moving strip. The compressed gas is at a minimum desired pressure which will establish a gaseous barrier to passage of a quantity of molten coating metal greater than desired final coating thickness. With this apparatus excess coating metal is returned without turbulence to the coating bath and the final coating on the strip is uniform, smooth, and free from surface imperfections.

Just before leaving the bath and coming into a coating control zone, the strip is led through a portion of the bath in which the metal is held at a controlled temperature so that the temperature of coating metal carried from the bath on exiting strip is substantially uniform regardless of changes in strip width or gage and line speed. Applicant has discovered that this uniformity in coating metal temperature eliminates difficulties encountered in maintaining desired coating weight and quality which stem from variations in coating metal viscosity and the compressibility factor of a gaseous barrier.

In further description of the invention, reference will be had to the accompanying drawings wherein like numbers are used to denote like parts wherever possible;

FIG. 1 is a schematic drawing of apparatus embodying the invention and for carrying out the method;

FIG. 2 is a sectional view of typical coating apparatus of the invention;

FIG. 3 is a schematic front elevational view of apparatus embodying the invention with some of the parts shown in section;

FIG. 4 is an enlarged sectional view of nozzle structure of the invention;

FIG. 5 is a reduced plan view of the structure of FIG. 4.

In carrying out the invention steel strip is prepared for hot-dip coating with cleaning and/or annealing apparatus **12** shown diagrammatically in FIG. **1.** After preparation, the strip is delivered through controlled atmosphere chute **14** into coating bath **16** where molten coating in excess of desired final coating weight adheres to the strip. The temperature of strip **18** is ordinarily elevated several hundred degrees above atmospheric temperature and heat is added to coating bath **16** by strip **18** or in another practice the coating bath adds heat to the strip. In either situation, with different gages and widths of strip, with changing temperature of the strip itself due to differing heat treatment requirements, and with different strip speeds, which are all part of everyday galvanizing conditions, bath temperature tends to fluctuate widely, with the changing masses of strip entering the bath. Compensation for these differences has been difficult and ordinarily required manipulation of strip temperature or speed to the detriment of efficient operation of a line.

Close control of the coating metal temperature at the strip exit zone of the bath is critical for sustained uniformity when controlling coating weight with the gaseous barrier process taught by the invention. This significant factor was not recognized in the practice described in parent application Ser. No. 282,474, now U.S. Pat. No. 3,499,418. The temperature of the coating metal at the strip exit zone of the bath influences both coating weight control and the behavior of the bath surface below the coating control apparatus. Therefore, in accordance with one embodiment of the invention, a portion **20** of the coating bath is maintained at a substantially constant temperature by submerged temperature regulator tubes **21,** regardless of changes in sensible heat effects due to changes in strip steel width, gage, temperature and/or line speed. Strip **18,** after passage around sink roll **22,** passes upwardly through portion **20** of the bath **16** toward top roll **23.** Thus the temperature of the coating metal on strip **18** as the strip exits from the bath is determined by controlled temperature portion **20** and is held substantially constant at a desired level.

The effect of regulating coating metal temperature in the present invention on uniformity of coating and reduction of bath turbulence becomes more clear when the interrelation of temperature and fluidity is considered. As the temperature of the molten metal in the coating pot rises the fluidity of the coating metal increases and less coating metal is dragged from the bath, more coating metal is held back by the gaseous barrier and the bath surface is more easily disturbed.

The effect of substantially constant coating metal temperature and resulting constant viscosity at the strip exit area is especially important in the gaseous barrier taught by the invention. Unlike the rigid nature of the prior art finishing rolls the gaseous barrier of the present invention constitutes a barrier to the passage of undesired coating metal which is of a yielding nature. Final coating weight is determined by the amount of coating metal encountering the gas barrier and its resistance to flow, or viscosity. Therefore, with other factors constant, a uniform viscosity which affects both drag out of coating metal and action of the gas barrier is required if coating weight remaining on the strip is to remain constant. Stabilizing coating metal temperature in the strip exit zone of the bath stabilizes the drag out of metal and the viscosity of the molten metal meeting the barrier, other factors being constant. In practice such temperature stabilization is preferably carried out by selective cooling of a portion of the bath as shown in FIG. **1.** However, certain cold strip type lines with borderline bath heating capacity may require selective heating of that portion of the bath in order to maintain a desired temperature level for coating metal.

Uniformity of temperature of the coating metal on the exiting strip is critical where sustained, uniform coating weight production is desired. Other reasons which have not been fully explained at this time may exist for this criticality in applicant's pneumatic process. Additionally, applicant has discovered that more uniform, smoother finish coating results when there is a substantial excess of coating metal to be held back by the gaseous barrier. Of course if less than desired final coating weight were to be dragged out because of excessive fluidity, the need for regulating coating metal temperature to obtain proper drag out of coating metal would be clear. However, the smoother finish referred to is achieved by virtue of acting on a substantial excess of coating metal over and above the minimal required merely to meet coating weight specifications by holding back some coating metal.

Another important teaching of the invention provides for positioning the moving strip as it passes through the coating control zone. The strip is constrained to purely longitudinal movement by eliminating any lateral vibrating or transverse swaying of the strip during its upward travel. The strip should be shaped to minimize buckles and wavy edges in the strip as much as possible. Also the strip is positioned so that each surface of the strip is uniformly spaced across its width from its respective adjacent nozzle.

After exit from the coating bath the strip passes through a coating control zone where a gaseous barrier established by superheated steam jets from nozzles **24** and **26** determines the final coating weight. The steam or other heated gas is made to impinge uniformly across the full width of the strip and is confined to a thin stream (five- to fifteen-thousandths inch) in the direction of strip travel.

FOr proper coating metal removal nozzles **24** and **26** must be positioned to impinge the steam against the strip while the coating metal is molten and at proper temperature. These and other considerations can require the nozzles to be positioned in close proximity, about 4 to 5 inches, above the coating bath.

To obtain desired conformation, movement, and spacing in the coating control zone, roll guides are specially positioned as close as possible to the coating control zone. Referring to FIG. **1,** guide roll **28** contacts the strip below but adjacent the bath surface and applies a force to the strip which may cooperate with an upper guide roll **30** to control positioning of the strip.

Guide roll **28** is preferably freely rotatable and not driven. Both guide rolls **28** and **30** make contact with

the strip as close as possible to the coating control zone without interfering with the coating operation and the coated surface, respectively. In the latter case, with roll **30,** heat is removed from the strip after exit from the coating control zone. Cooling air or wet steam from spout **32** is used to solidify the coating before contact with guide roll **30.** An important discovery of applicant, reasons for which are not fully known, is that upper roll **30** can be positioned closer to the bath with the jet process of the present invention than is possible with coating control rolls. For example when wet steam is discharged from spout **32** to minimize spangle formation by rapidly solidifying the coating the spout can be positioned about 5 to 6 feet above the bath rather than the customary 8 to 12 feet above the bath used with coating control rolls. Guide roll **30,** which is positioned a short distance (one to three feet) above spout **32,** can then be correspondingly closer to the bath. Because of this, roll **30** is more effective in obtaining the desired strip placement in the coating control zone.

The shaft of guide roll **28** is positioned as close to nozzles **24** and **26** as possible without disturbing coating weight control; for example, 7 or 8 inches below nozzles **24** and **26,** with the top of the roll submerged about two to three inches beneath the coating bath surface has been found to be optimum in a coil galvanizing lines of present design.

A coating control machine in accordance with the invention is shown in more detail in FIG. **2.** The strip **18** passes upwardly from sink roll **22** in contact with guide roll **28** and between nozzles **24** and **26.** The nozzles are supported in slides **34, 36, 38** and **40,** which permit the nozzles to move toward and away from the strip. Adjustment gearing **42** and **44** which may be operable by motors **42', 44'** (see FIG. **3**) is connected to each nozzle for selection of spacing between each nozzle and its adjacent surface of strip **18.** The adjustment means are mounted on both longitudinal ends of the nozzles, are calibrated and are adjustable from the same side of the machine.

The nozzles and slides are supported by frame members **46** and **48** which are separable to permit installation of the machine without cutting the continuous strip. Frame member **46** also supports arm **49** which holds the bearing for guide roll **28.** The lateral displacement of strip **18** between sink roll **22** and guide roll **28** is exaggerated in the FIG. **2** showing. In practice, a shaping and placement force is applied to strip **18** by a lateral displacement of strip **18** of around three inches between sink roll **22** and guide roll **28.** An oppositely directed force may be applied at roll **30.** Strip **18** moves upwardly along a substantially vertical path since any lateral offsetting is minor compared to the overall length of the longitudinal path between the sink roll **22** and top roll **23,** usually forty to sixty feet, or more.

Guide roll **28** is spaced seven and one-half inches from nozzles **24** and **26** in the machine shown. This spacing can be 15 inches or more above roll **28** dependent on a number of conditions. However, the object is to position nozzles **24** and **26** as close to guide roll **28** as possible in order to take advantage of the planar configuration of the strip imposed by roll **28.** In positioning the nozzles however, turbulence of the bath and return of coating metal to the bath must be considered.

The coating metal on the strip should preferably be above 800°F. at the time of contact with the coating control jet. Composition of the galvanizing spelter may affect this; conventional galvanizing spelter includes aluminum additions and impurity level percentages of lead, antimony, cadmium, etc., and has a melting temperature in the neighborhood of 790°F. The temperature of zone **20** is maintained in a range of roughly 800° to 860°F. dependent on product and stabilized to avoid changes greater than roughly 10° to 20°; e.g. around 825° to 840°F. is preferred for most of today's flat rolled steel galvanized products. In stabilizing the temperature of zone **20,** a temperature differential up to 30° or higher may exist between zone **20** and the remainder of the bath.

FIG. **3** shows a front elevation, partially in section, of coating apparatus in which a fluid coolant tube **50** is submerged in coating bath **16.** In practice a plurality of such tubes can be used to define a zone of temperature regulated cooled spelter. For safety purposes tube **50** may be surrounded by conduit **52** containing a heat conductive material **54,** such as molten lead. Flow of fluid in tube **50** is controlled by valve **56** and may be responsive to temperature control apparatus **58** which receives signals from temperature measuring device **60.** Water is a preferred coolant.

Superheater **62** controls the temperature of a heated gas, such as superheated steam or air. Temperature of the heated gas is preferably held substantially constant with varying flow demands. In practice a temperature around 850°F. is prefered but satisfactory operation can be obtained within a range of, roughly 500° to 1,500°F. Temperature measurements at indicator **64** can be used to automatically control valve **63** which controls fuel flow to superheater **62** to maintain gas temperature at the desired constant value.

The pressure at nozzle **24** or **26** cannot be conveniently measured without disturbing the coating. Pressure measurements read at control meter **66,** or a similar location, give satisfactory results once relative values for a given installation are established. Valve **68** controls the pressure of the heated gas delivered to nozzle **24** and is responsive to selected pressures at control meter **66.** A similar control is provided for nozzle **26** and substantially equal pressures are used on both surfaces of the strip when equal coating weights on each surface are desired.

For automatic coating weight control, a noncontact coating thickness measurement device, such as beta ray back scattering gate **67** is positioned on each side of strip **18.** Thickness measurements from the beta ray gages are delivered to coating weight control apparatus **69** and coordinated with the selected coating weight to vary the pressure delivered to each coating control nozzle or control the spacing between each nozzle and its respective side of the strip **18.** Control signals are delivered over the dotted lines shown to a pressure control meter, such as **66,** for each surface of the strip and to motors **42', 44'** for actuation of the spacing controls **42** and **44.**

Details of linearly extended nozzle structure are shown in FIGS. **4** and **5.** Nozzle structure **70** includes two die members **72** and **74** which mate to form a linearly extended gas manifold **76.** Die members **72** and **74** are joined by a series of bolts **78.** The separation between members **72** and **74** determines the nozzle opening or passageway **84** and is set by use of shim stock **80.**

Spacing means **80** can vary in thickness between 0.005 and 0.015 inches. Passageway **84** has an inlet opening into manifold **76** and an outlet facing the strip. Gas is supplied through a plurality of apertures **82,** in order to obtain substantially uniform gas pressures across the full longitudinal length of manifold **76.** The gas exits through linearly extended passageway **84.** It is to be noted that the angle of entry of the gas with respect to the plane of the exit is shown at 90° but the invention is not limited to 90°; however, a substantial angular relationship is desired in order to obtain uniform gas dispersal and exit velocity across the linearly extended nozzle opening **84.** Typical dimensions for nozzle structure used in obtaining data for the examples presented are:

A	57¾"	E	½"
B	28⅞"	F	½"
C	18"	G	1½"
D	54"	H	.015"

One of the primary objects of nozzle structure used in gas barrier coating control of strip is a linearly extended gaseous stream of uniform gas pressure across the strip. The thickness of the gaseous barrier in a direction parallel to the strip motion is dependent on the nozzle opening which will give proper flow. Larger nozzle openings give greater gas mass and permit a greater mass of molten coating to be held back. Larger openings also avoid clogging by foreign matter; openings of .015 inches have been found satisfactory for mill use in this latter regard.

In the gas barrier principle, as taught by the present invention, the mass of the gas impinging against the molten coating is a dominant factor. The effect of mass can be seen from a culvert stock example where approximately 1,090 pounds of steam per hour at a line speed of 110 feet per minute produced 2½ ounce per square foot coating while at a line speed of 130 feet per minute approximately 2,200 pounds per hour produced light commercial coating near 0.6 ounce per square foot.

From an operational point of view, pressure change can be used for changing the mass of the superheated steam or other gas used. For example, with increasing line speeds the mass of coating to be held back to maintain constant coating weight increases. This increase in mass can be achieved by increasing gas pressure. Alternatively, the mass of the gas can be increased by increasing the area of the nozzle slot without increasing the gas pressure.

Speed of the line is an important factor; it has been observed that on a continuous galvanizing line, under similar operating conditions of nozzle location and superheated steam pressure, a speed of 100 feet per minute produced a "light commercial coat" while 200 feet per minute produced a commercial ounce and a quarter coating. Line speed could be used to control coating weight but, in practice, an operator would run a line at a maximum speed for a particular gage material as determined by other factors. The gas barrier could be set at the optimum height above the bath, the optimum gas opening, the gas pressure or nozzle spacing or both being then varied to control the coating weight.

Final coating weight at a given line speed can be controlled by either gas pressure or proximity of the linearly extended nozzles to the strip, or both. As described above the temperature of the coating metal applied to the strip is held substantially constant. Briefly, higher strip speeds, lower impinging gas pressure, and greater distances between nozzle and strip produce heavier coating weights; lower strip speeds, high impinging gas pressure, and lower distances between the nozzle and the strip produce lighter coating weights. Generally the strip speed is selected based on other limiting factors, e.g., the annealing capacity of the line, and the line is ordinarily run at the maximum speed available considering such limitation factors. It is desirable to maintain a minimum steam pressure regardless of other related coating control factors although to meet variations in required coating weight either steam pressure or nozzle spacing can be changed. In practice changing of nozzle spacing is preferred because of the desire to maintain a minimum gas pressure and to avoid over or under correcting when gas pressure controls are employed. With automatic controls either spacing or pressures can be changed readily to meet coating requirements within a selected low pressure range. Typical production examples are included below.

TABLE I

Continuous-strip galvanizing with nozzles 4½ to 5½ inches above bath level, coating metal at exit side of bath held at or near 825°F., nozzle opening of 0.015 inch, substantially perpendicular impingement, superheated steam temperature about 840°F., spacing between each nozzle and its adjacent strip surface about one-half inch.

	RUN 1	RUN 2	RUN 3	RUN 4
Strip thickness (inches)	.020	.0183	.018	.0172
Strip width (inches)	36 9/16	28	24½	27 13/16
Topside pressure ($lb./in.^2$)	35	30	37	32
Bottomside pressure ($lb./in.^2$)	34	30	38	31
Speed of line (fpm)	170	220	230	230
Coating weight ($oz./ft.^2$) (Total of both surfaces)	.59	.82	.59	.99

TABLE II

Continuous-strip galvanizing with nozzles 4½ to 5½ inches above bath level, coating metal temperature at exit side of bath held at or near 825°F., nozzle opening 0.015 inch, substantially perpendicular impingement, superheated steam temperature about 840°F., spacing between each nozzle and its adjacent strip surface about three-fourths inch.

	RUN 5	RUN 6	RUN 7	RUN 8
Strip Thickness (inches)	.018	.0217	.021	.0157
Strip Width (inches)	36	36	23¼	24
Topside Pressure (lb./in.²)	38	29	42	42
BOttomside Pressure (lb./in.²)	40	29	41	41
Speed of Line (fpm)	200	200	210	230
Coating Weight (oz./ft.²)	.54	.76	.53	.56

TABLE III

The following differing products were run over a 3 hour period on the same line with the nozzles 4½ to 5½ inches above bath level, nozzle opening 0.015 inch, substantially perpendicular impingement, and spacing between each nozzle and its adjacent strip surface about three-fourths inch. The coating metal temperature at the exit side of the bath was held at or near 825°F. despite wide changes in strip heat added to pot by changes in steel mass introduced and varying line speeds.

	RUN 9	RUN 10	RUN 11
Strip Thickness (inches)	.018	.0157	.0187
Strip Width (inches)	30	30	35
Topside Pressure (lb./in.²)	32	26	28
Bottomside Pressure (lb./in.²)	32	26	28
Speed of Line (fpm)	230	130	180
Coating Weight (oz./ft.²)	.94	.94	.97
Product Form	Coils	Sheets	Coils
Use	Pipes	Warehouse Stock	Roofing

Differential-coat is readily produced by controlling gas pressure on each surface. From observation or production of differential-coat on a continuous galvanizing line, the light side coating is controlled more effectively by the gas barrier apparatus than with any known method. Imperfections in the strip on the light side of the strip are not a problem with the gas barrier apparatus and a smoother light side coating results. Differential galvanized product having less than 0.1 ounce per square foot on the light side and more than 0.3 ounce per square foot on the heavy side was produced using 55 pounds per square inch steam pressure on the bottom side manifold (light side of the differential coat) and 45 pounds per square inch steam pressure on the top side manifold.

In producing product with equal coating weight on both surfaces, the strip is ordinarily passed midway between the coating control nozzles and the steam pressure on each nozzle is about the same. In order to make differential coat product, the nozzle on the light coating side of the strip can be moved closer to the strip or the steam pressure can be increased or both. In practice, changing the spacing of the nozzles is preferred as shown in the following table.

TABLE IV

With perpendicular disposition of the nozzles, drawing quality stock, 0.0503 inch gage, 37⅞ inches width, was produced at a line speed of 80 feet per minute with the following settings:

	Nozzle Spacing	Pressure (lb./in.²)	Coating Weight (lb./ft.²)
Light Side	¼"	25	.19
Heavy Side	1¼"	22	.48

Adjustment in spacing between nozzles to change coating weight is an advantage of the substantially perpendicular impingement concept which is not readily available with angled impingement. Spacing of angled nozzles cannot be changed without changing the point of impact of the gas with the strip. Therefore the point of impact for one nozzle may be readily offset from the other with an angled disposition. One result can be an edge buildup of coating metal. With the nozzles disposed substantially perpendicularly to the strip this problem does not exist and a new means of adjusting coating weight, by adjusting nozzle spacing is available to the operator.

With the present invention, high strip speed is not a limiting factor whereas, with mechanical contact methods, coating control was one of the major speed limiting factors. Other operations such as annealing or coiling, etc., may place some limit on a particular line but, with the present invention, the coating operation itself will not limit line speeds with present day molten metal coating lines of any type. In fact, it has been found that the gas barrier principle of this invention produces smoother finishes at higher speeds.

Some of the advantages of the gas barrier principle of coating control include increased production, improved quality and more economic production. Increased production results from the faster line speeds available with this invention over those with the prior art practice; also, less down time for a line since there is no necessity to change coating rolls, etc. Improved quality results from the avoidance of coating roll marks and the smoother finish produced by the gas barrier method. Improved economy results from the increased production referred to above, increased percentage yields, and elimination of a number of post coating treatments to improve coating surface.

I claim:

1. Continuous metallic strip hot-dip metal coating apparatus comprising

a. molten coating metal bath means having the upper surface of the molten coating metal of the bath means exposed to a gaseous atmosphere,

b. roll means defining a travel path for continuous metallic strip through a portion of the molten coating metal of the bath means, thence through a coating weight control zone and upwardly to a point where the molten coating metal applied to the strip in the bath has solidified, the coating weight control zone extending upwardly from the exposed surface of the molten coating metal through the portion of the travel path in which the weight of the still molten coating metal applied to the strip in the bath can be controlled, the roll means comprising a first roll submerged in the molten coating metal and a second roll positioned above the bath means at a point where the molten coating metal applied to the strip in the bath means has solidified,

c. nozzle means having two linearly extended, narrow gas outlet means, each gas outlet means having a length greater than about 23 inches and at least equal to the width of the strip, each gas outlet means being shaped to deliver a concentrated stream of gas under pressure of shape and mass along the length of the gas outlet means to give desired coating weight across the width of the continuous metallic strip,

d. means for supplying gas under pressure to the nozzle means,

e. support means for positioning the nozzle means in the coating weight control zone with each linearly extended gas outlet means facing and symmetrically disposed in spaced relation to an opposite planar surface of the strip and spaced above the upper surface of the bath, with each gas outlet means positioned to direct a stream of gas under pressure against the strip and across the width thereof with the major component of motion of the stream of gas perpendicular to the opposed planar surface of the strip,

f. means for continuously controlling the mass of gas supplied to the nozzle means,

g. heat exchange means having portions immersed in the bath for control of the temperature of the molten coating metal carried out of the bath on the strip,

h. means for introducing a stream of cooling fluid into the heat exchange means, and

i. means associated with means (h) for controlling the rate of introduction of cooling fluid into the heat exchanger means.

2. The combination of claim 1 further comprising

j. means for measuring the temperature of the bath, and

k. means actuated by means (j) acting on means (i) to control the rate of introduction of cooling fluid to maintain the temperature of the bath at a desired value.

3. The combination of claim 1 in which

j. means (g) is disposed in the bath in the neighborhood of the zone where the strip leaves the bath.

4. Continuous metallic strip hot-dip metal coating process comprising the steps of

a. applying molten coating metal in excess of desired coating weight to continuous metallic strip by passing the strip longitudinally through a bath of molten coating metal having an upper surface which is exposed to a gaseous atmosphere,

b. passing the continuous strip from the molten coating metal bath through a coating weight control zone located immediately above the upper surface of the molten coating metal bath in which zone the molten coating metal applied to the strip in the bath remains molten,

c. forming linearly extended thin streams of gas, each of length at least as great as the width of the strip,

d. impinging a said stream of gas against each of the opposite planar sides of the coated strip in the coating weight control zone across the full width of the strip in a line space above the upper surface Of the bath with a major component of motion of the stream of gas perpendicular to the strip,

e. each stream of gas being shaped along its length in step (c) to have mass flow across the width of the strip such as to result in desired coating weight across the width of the strip,

f. controlling the mass of gas impinging against each planar side of the coated strip in the coating weight control zone to maintain uniform along the length of the strip the weight of coating metal remaining on the strip leaving the coating control zone, and

g. subjecting the molten coating metal in the bath to heat exchange with a heat transfer medium to control the temperature of the molten coating metal on the strip as delivered from the molten coating bath.

5. The process of claim 4 including

h. measuring the temperature of the bath, and

i. controlling the amount of heat transfer medium to maintain the temperature of the molten coating metal on the strip constant.

6. The process of claim 4 in which the molten coating metal in the bath in the neighborhood of the zone where the strip leaves the path is subjected to heat exchange in step (g).

* * * * *