(12) INTERNATIONAL APPLICATION PUBLISHED UNDER THE PATENT COOPERATION TREATY (PCT)

(19) World Intellectual Property Organization
International Bureau

(43) International Publication Date
6 March 2003 (06.03.2003)

PCT

(10) International Publication Number
WO 03/019757 A1

(51) International Patent Classification[7]: H02K 53/00

(21) International Application Number: PCT/GB01/03818

(22) International Filing Date: 24 August 2001 (24.08.2001)

(25) Filing Language: English

(26) Publication Language: English

(71) Applicant and
(72) Inventor: FILER, Daniel, William [GB/GB]; 2 Fogg Cottage, Milton Malsor, Northants NN7 3AF (GB).

(81) Designated States (national): AE, AG, AL, AM, AT, AU, AZ, BA, BB, BG, BR, BY, BZ, CA, CH, CN, CO, CR, CU, CZ, DE, DK, DM, DZ, EC, EE, ES, FI, GB, GD, GE, GH, GM, HR, HU, ID, IL, IN, IS, JP, KE, KG, KP, KR, KZ, LC, LK, LR, LS, LT, LU, LV, MA, MD, MG, MK, MN, MW, MX, MZ, NO, NZ, PH, PL, PT, RO, RU, SD, SE, SG, SI, SK, SL, TJ, TM, TR, TT, TZ, UA, UG, US, UZ, VN, YU, ZA, ZW.

(84) Designated States (regional): ARIPO patent (GH, GM, KE, LS, MW, MZ, SD, SL, SZ, TZ, UG, ZW), Eurasian patent (AM, AZ, BY, KG, KZ, MD, RU, TJ, TM), European patent (AT, BE, CH, CY, DE, DK, ES, FI, FR, GB, GR, IE, IT, LU, MC, NL, PT, SE, TR), OAPI patent (BF, BJ, CF, CG, CI, CM, GA, GN, GQ, GW, ML, MR, NE, SN, TD, TG).

Published:
— *with international search report*

For two-letter codes and other abbreviations, refer to the "Guidance Notes on Codes and Abbreviations" appearing at the beginning of each regular issue of the PCT Gazette.

(54) Title: MAGNETIC FIELD MOTOR MARK III

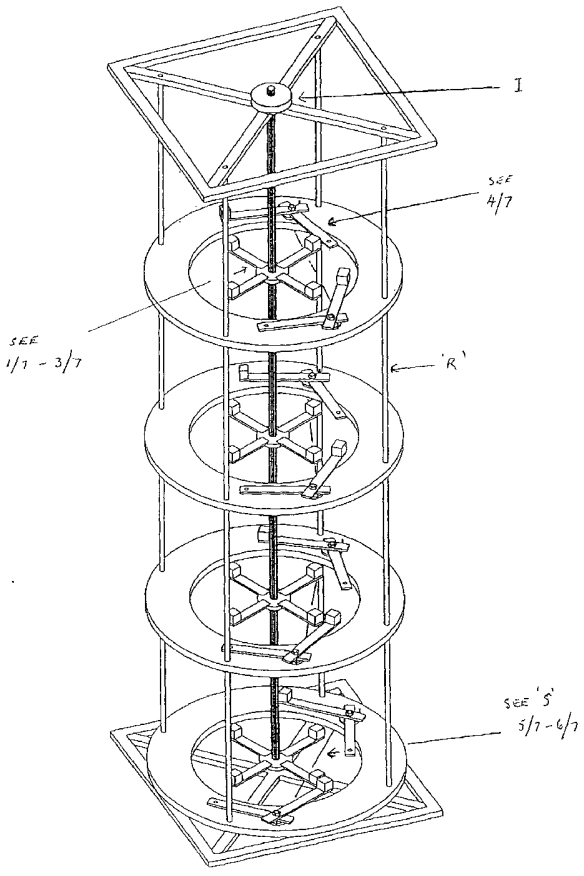

MACHINE (EXPANDED FOR CLEAR VIEWING).

(57) Abstract: A motor involving the movements within and outside of the magnetic fields of magnets fixed on the rotary bar and its respective partner arm's fixed magnet. The partner arms are also movable. Reactive tension forces AGAINST the attractional forces are collected by a counterspring (letter N) on each partner arm that in turn is released and repelled away from the confines of that respective field as a rotary magnet travels to and by. The countersprings can also be used to stop the partners from colliding with their respective rotary magnets. The partner arms are paired with counterlinks (letter S) so that one partner arm is repelled outside the confines, the other is brought into the confines ready to receive the next rotary magnet's field. By releasing the countersprings and repelling, enough force is created from the partner arms to overcome friction and holding forces to supply an output.

WO 03/019757 A1

MAGNETIC FIELD MOTOR Mark III

The invention relates to motion by the use of the magnetic field/s of permanent magnet/s fixed on the end of a rotary bar which in turn controls its/their partners, i.e. another permanent magnet on a partner lever which is attracted to and motionally repelled from the permanent magnet/s of the rotary bar thus causing motion for a short distance.

By adding extra partners (with countersprings) which return to an outer concentric circumference then, in turn, comes into the magnetic fields of the rotary bar magnets whose moving paths form the inner concentric circumference, i.e. two nearby concentric circles.

The inner circle being the MOVING path of the rotary bar magnets. The outer circle being the STOP position of the partners.

This improved version of the Magnetic Field Motor Mark II would keep the rotary bar at a steady speed. (details given further on).

Therefore, we will call it the Magnetic Field Motor Mark III.

The COUNTERSPRING is an addition which creates a tension as the rotary bar travels towards the partner (the partner arm's magnet).

The tension to be created is when the rotary bar's magnet and the partner are nearing and including their closest attractive positions to each other, i.e.
THE COUNTERSPRING COLLECTS AND STORES THE REACTIVE FORCES IN THE TENSION CAUSED AGAINST THE ATTRACTIONAL FORCES BETWEEN THE TWO MAGNETS IN THE STRONGEST PART OF THE FIELD. THIS FORCE IS RELEASED AS AN OUTPUT WHEN THE ROTARY BAR MAGNET TRAVELS BY, REPELLING IT'S PARTNER.

This counterspring will also stop the partner from going inside the outer concentric circle (as stated later).

When the rotary bar travels by, the partner also repels away with the aid of the counterspring AND other forces (mentioned later).

Thus the kinetic forces on the partner arm can help to continue the rotation of the rotary bar preferably by mechanical means and still have some force left over.

IMPORTANT: the counterspring has a dual purpose.

1) To collect and store some or most of the reactional force for helping to repel its partner arm with excess force
   N.B. The magnet on its arm also helps to repel the arm as the rotary magnet travels by.
2) To stop each partner (arm) on the outer concentric circle.

Another object used is the COUNTERLINK. This is a important coupling rod which connects one partner arm to a second partner arm.

The purpose of this counterlink is :- To return the second partner (arm) from outside the confines of the magnetic field to the outer concentric circle as the first partner (arm) repels. and vice versa.

These counterlinks connect pairs of partner arms only.

Only minimal frictional force is used for the counterlink movement.

N.B. The earth's escape velocity is approximately 25,000 M.P.H. reducing according to the strength of its gravitational field and the direction and distance required by its moving partner (space vehicle).
The magnetic escape velocity (*MEV*)* although much less, depends on the strength of the magnetic field and the direction and distance required by its moving partner (the rotary bar).

Because of this, it is impossible for the rotary bar to rotate at an excessive speed. Thus; it is easier to control or stop it.

**MEV*: A speed and distance where the force fields no longer help the rotary bar whilst in motion. The force fields react when the rotary bar loses speed (kinetic energy) through friction or work, (heat energy).In other words, the option of creating more force is lost when the rotary bar is moving at or above the MEV rate: i.e. when the forces from the partner arms are turned inwards towards the rotary bar which has the output on its spindle as with the Mark II motor.

Therefore, with this Mark III motor the output is to be from the partner arms via a regulator e.g. gears etc. with some input to the rotary spindle giving it a set slow speed (under the MEV rate), then any remaining force to be used as other useful energy.

According to this invention, the result would be extremely useful in that it would provide an output of energy without any fossilised or radiated pollution.

There will be "magnetic pollution" but this can be screened by ferrous means.

There may be latent or static electricity but this can be earthed. Now for the thesis in human (layman's) terms.

The earth has its own attractional force field. It is very big.

Therefore, you will have to travel away from it for many miles before you notice any difference in the strength of its force field.

You cannot make a machine large enough to make use of the differences in forces.

The magnet has its own attractional force field. The differences in strength are noticeable only centimetres away.

Let us make use of it by starting from the beginning.

Fix a magnet to one end of a non-magnetic lever. On the other end, drill a pivot hole for minimum friction pivot.

Example 1 is shown on the top half of page 1 of 7 of Drawings.

For double strength and balance; double the length of lever, then fix a magnet at each end of the lever with one pivot hole in the centre of the lever.

Example 2 is shown on the top half of page 1 of 7 of Drawings.

On a pivot (spindle) this lever is now able to swing around, the magnets moving in one path only, i.e. a CONTROLLED movement at the circumference only. We will call this lever a ROTARY BAR; with a spindle hole in the middle. Fixed onto a frame would look like :-

Example 3 shown on the top half of page 1 of 7 of Drawings.

N.B. If pushed the fixed magnets would swing around in their own circumference path.

As noticed, the rotary bar will not move without force.

To make it move, it must have a partner of which it is able to have some control over.

In this case, the partner should be a permanent magnet fixed onto the end of a non-magnetic lever, which should swing on a minimum friction pivot.

The object of the swinging lever is for its fixed partner to repel freely in a controlled path as the rotary bar with its magnet moves by and also, this partner return back and stop on the outer concentric circumference ready to attract the next rotary bar towards it.

Example 4 is shown on the top half of page 1 of 7 of Drawings. (D - Pivot: C - Rotary Lever: A - Rotary's Magnet: AA - Partner/ Magnet: V - Partner Arm: J - Pivot: N - Spring/Stop: K - Balance).

Notice how the rotary bar is attracted to the partner. (The partner is not moving because of the spring/stop lug but, it has a tension force because it is being attracted forward).

As again noticed, the rotary bar moves forward to the partner but will not travel by because of the "holding" forces.

It may require more force for it to pass by (without touching). Lets say: use three more rotary bars and their partners (and countersprings) with their own fields.

By positioning them along the shaft in order that their magnetic fields do not interfere with each other yet, their attractions follow close enough for the forces to "travel" via the shaft in order to move the first rotary bar past its partner. It can then be free of its holding force and in conjunction with the counterspring, repel its partner away with excess force.

Thus; this fairly strong attractional force on the second partner and the weaker forces on the third and fourth partners respectively are: the OTHER forces which pull the first rotary bar past, repelling its partner.(see page 1). N.B. The magnets are fixed so that like poles repel at this point. Another force?

Once we have completed this small movement, all we have to do is add extra rotary bars and their partners; with countersprings and counterlinks; to complete the circuit. Then providing that some of the "excess" released and repelled force is used as input for continuing to rotate the shaft of the rotary bars at a set speed, i.e. under the MEV rate; the remaining excess force can be used as an output for other useful energy.

The motion, being similar to that of an electric motor, requires the frame to be similar i.e. round.

The machine requires the frame to be flat or fixed because of gravitation. Therefore, the first machine will have a round inner frame fixed to a square outer frame.

The previous writings and drawings together with the following detailed drawings and explanations will make up a specific embodiment of the invention.

Page 1/7 contains Examples 1 to 4 on top of page as previously stated. Lower half contains - A section of a 4-levered rotary bar on part of a shaft (spindle).

- A:- Fixed permanent magnet. (one should be fixed on the end of each of the 4 levers)
- B:- Spacer (for distancing discs along the shaft).
- C:- Lever on disc (E). Four levers on disc.
- D:- Shaft or spindle (part of).
- E:- Disc.

Pages 2 +3/7 show the rotary bar in pieces (for repair) also the shaft.

- E: disc with toothed hole for fixing in position on shaft.
- F:- End of shaft to take input pulley or gearwheel.
- G:- Where shaft is fixed into minimum friction bearing on outer frame. (Repeated letters as described for previous drawings).

Page 4/7 shows the partner arm , including its counterspring.
AA:- Partner (magnet) fixed on one end of partner arm.
H:- Output lever of partner arm N.B. The angle of the partner arm to suit the output 'pickup', even 180 degrees angle.
J1,2,3 & 4:- Partner arm pivot (J1) with bearing. (J2 set in inner frame), spacer J3 and nut J4.
K:- Weights (balancing).
N:- Counterspring, one end set in frame, other end for tension in partner arm.

Page 5/7 shows one section of 4-part inner frame with partner arms (rotary bar shown is set in outer frame, not shown). Please note, counterlink 'S' see drawing 6/7. Also note 'N' counterspring.
T:- Stop switch. (partner arm is stopped midway in its Movement).

Page 6/7 shows reverse side of same section as page 5.
L:- Underside of partner arm's pivot(J1), for connecting two partner arms with counterlink 'S'.

Page 7/7 shows complete machine (expanded).
If closed, would be connected by shorter frame rods
R:- Frame rods. (Length to suit).
I:- Input (pulley or gearwheel) would be on one end of shaft.

N:- COUNTERSPRINGS vaguely seen, but can be any design so long as there is a counter tension. It is preferred if it was made of non-magnetic material. In fact, apart from the magnets, all materials should be non-magnetic.

N.B. In this case, the partner arms are pivoted in such a way that thirtytwo action/reaction movements are spaced equally throughout one complete revolution of the rotary bar.

CLAIMS

1. A magnetic field motor comprising of permanent magnets fixed to levers on a rotary bar/s which turns and is attracted to their partners i.e. other permanent magnets on partner levers which are attracted to and motionally repelled from the field of the rotary bar's magnet/s with the aid of counterlinks and mainly the counter-springs. This is done in such a way that the output forces are greater than the input forces.

2. The countersprings as used and claimed in claim 1. are the causes of reactive tension against the attractional forces between each magnet and its partner i.e. another magnet or magnetic partner which becomes a magnet whilst being attracted.

3. The use of countersprings as claimed in claims 1 & 2 on one or more levers on any magnetic machine.

4. As all types of springs can be used for the countersprings as claimed in any of the preceding claims; any type made of any material which may cause a tension; even a single rod as in a stop lug.

5. The counterlink as in claim 1. which returns a partner to the magnetic field; or vice versa.

6. Electricity can be caused with some material in a moving magnetic field or vice versa, then as in any of the preceding claims, all useful electricity by this means.

7. The magnetic field motor can be built to any size therefore, the use of the magnetic field motor for anything.

8. The spacing of the magnets on various levels in order that their magnetic fields do not interfere with the wrong fields.

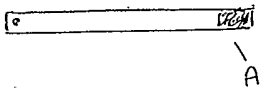

EXAMPLE 1.

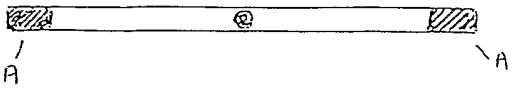

EXAMPLE 2.

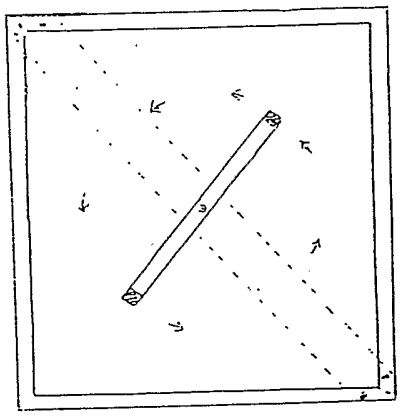

EXAMPLE 3.

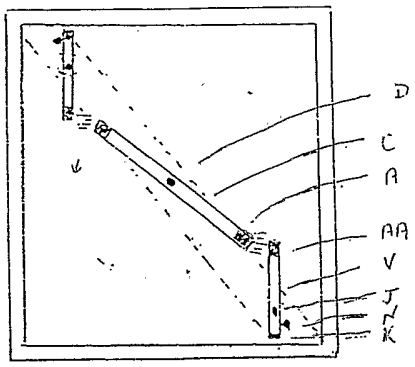

EXAMPLE 4.

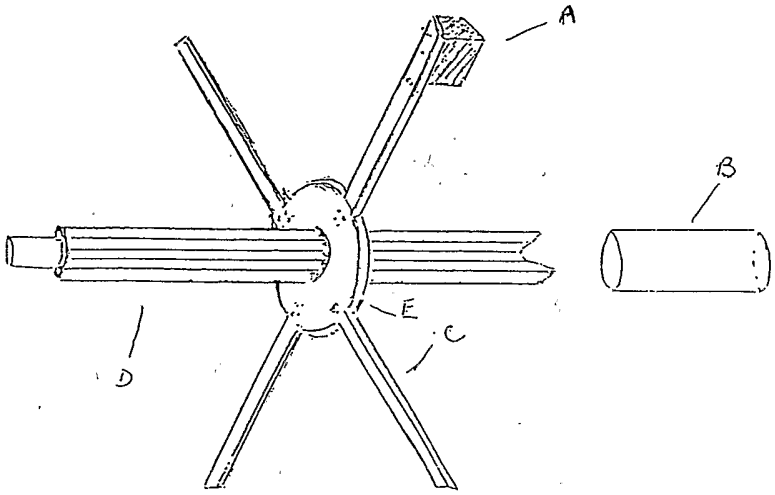

4-LEVERED ROTARY BAR ON SECTION

OF SPINDLE (SHAFT).

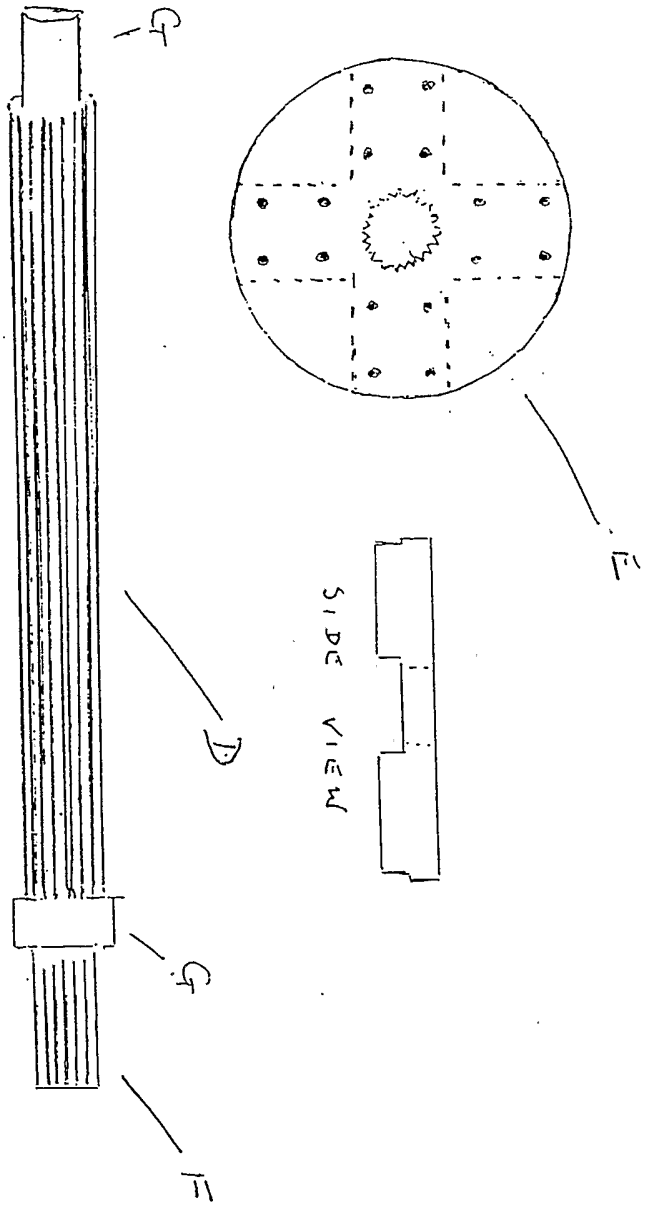

DISC, (CENTRE PIECE OF ROTARY BAR) AND SPINDLE (ANY LENGTH).

ROTARY LEVER (ONE OF FOUR FIXED ON DISC; EACH WITH A MAGNET SHOWN AS 'A'

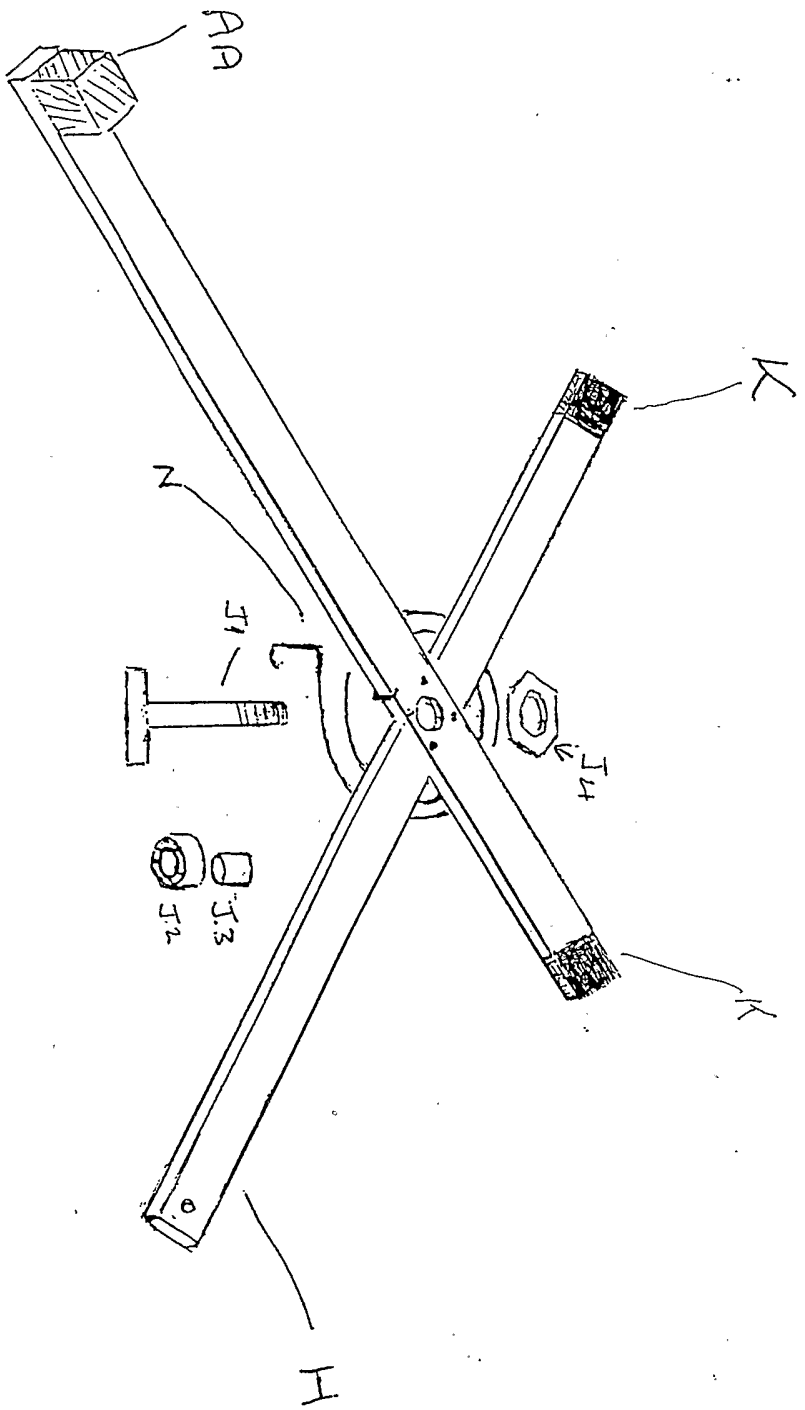

PARTNER ARM WITH COUNTERSPRING AND OUTPUT BAR (H).

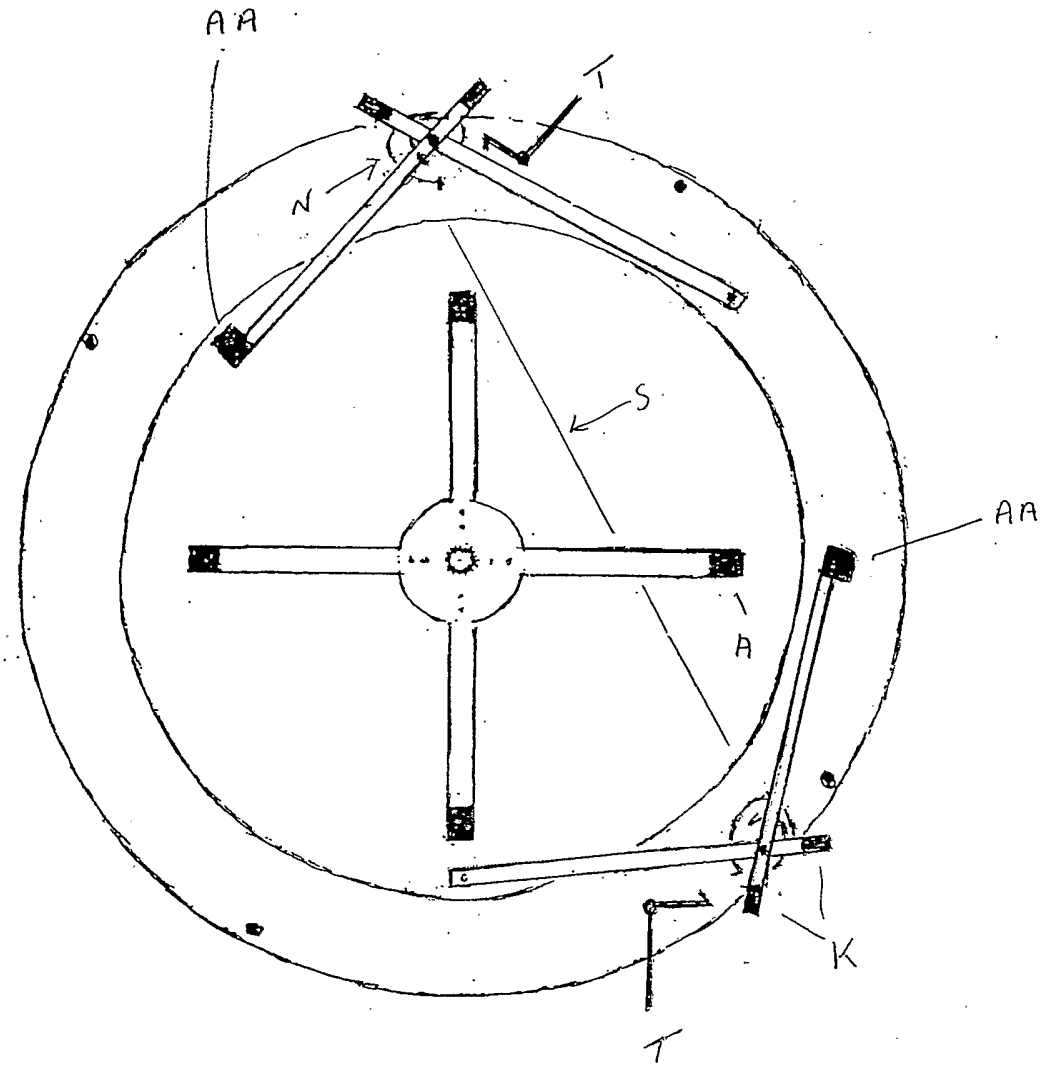

SECTION OF 4-PART INNER FRAME.

RETURN MOVEMENT CONTROLLED BY MEANS OF COUNTERLINK-(S)

(ROTARY BAR SHOWN IS FROM OUTER FRAME NOT SHOWN)

NOTE- DRAWING 6/7.

REVERSE SIDE OF SECTION OF 4-PART INNER FRAME. (ROTARY BAR MISSING).

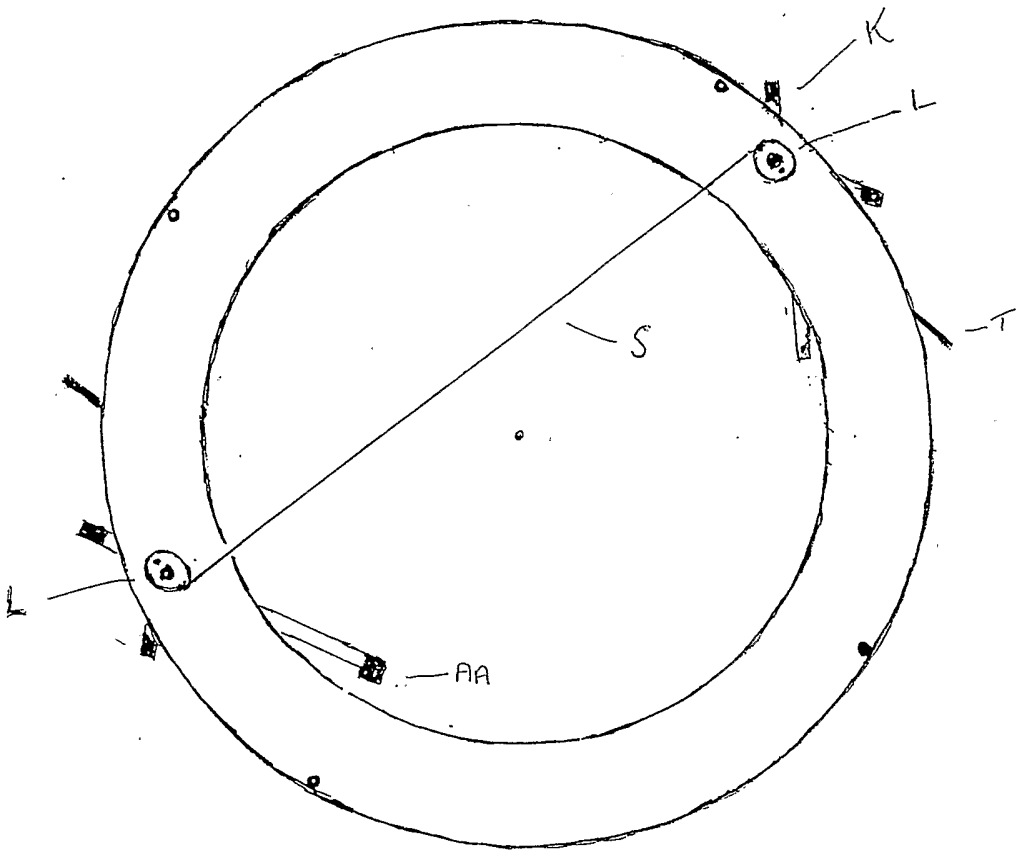

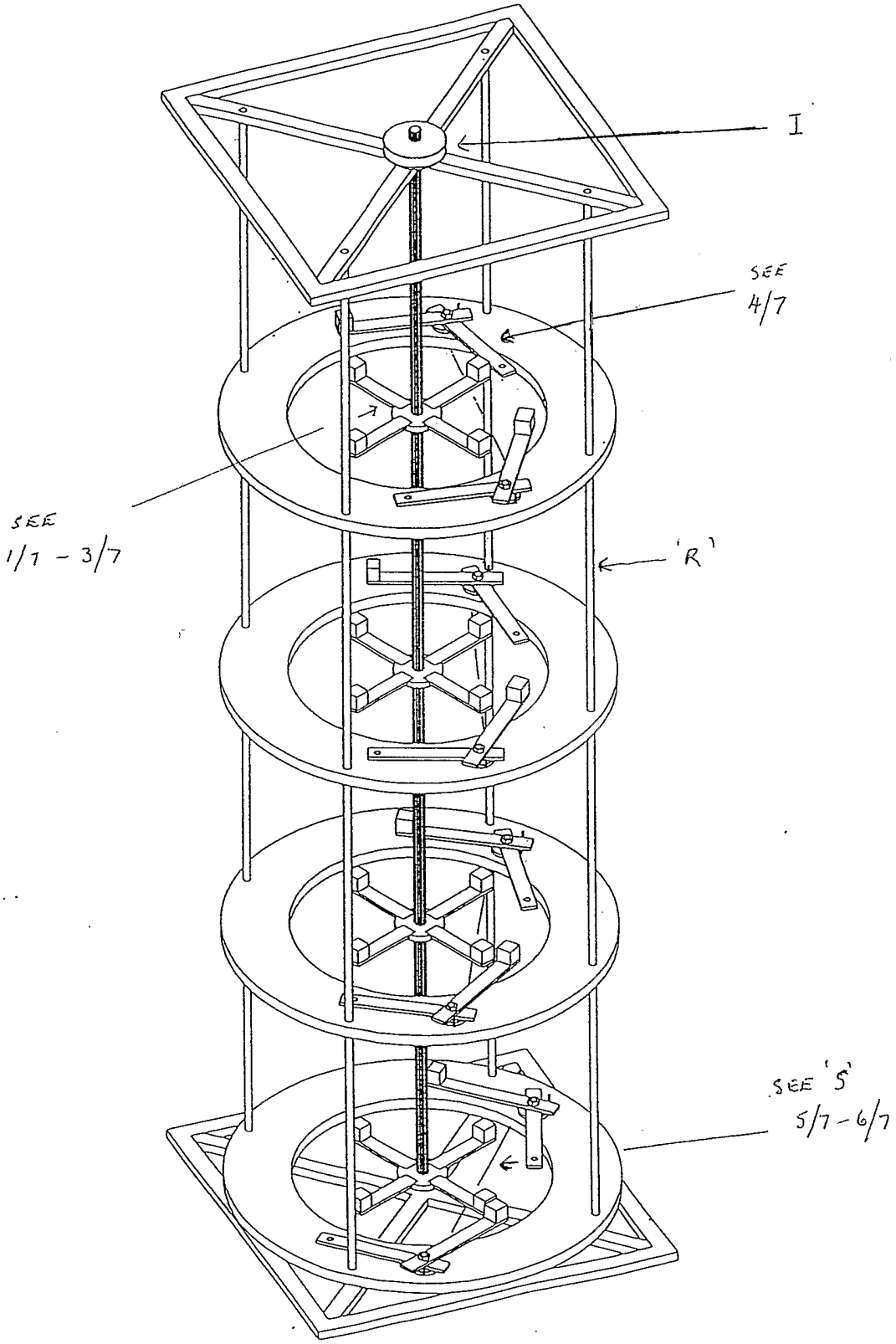

MACHINE (EXPANDED FOR CLEAR VIEWING).

INTERNATIONAL SEARCH REPORT

Inter ıl Application No
PCT/GB 01/03818

A. CLASSIFICATION OF SUBJECT MATTER
IPC 7 H02K53/00

According to International Patent Classification (IPC) or to both national classification and IPC

B. FIELDS SEARCHED

Minimum documentation searched (classification system followed by classification symbols)
IPC 7 H02K

Documentation searched other than minimum documentation to the extent that such documents are included in the fields searched

Electronic data base consulted during the international search (name of data base and, where practical, search terms used)
EPO-Internal, WPI Data, PAJ

C. DOCUMENTS CONSIDERED TO BE RELEVANT

Category °	Citation of document, with indication, where appropriate, of the relevant passages	Relevant to claim No.
X	ANGRIST S W: "PERPETUAL MOTION MACHINES" SCIENTIFIC AMERICAN, SCIENTIFIC AMERICAN INC. NEW YORK, US, vol. 218, no. 1, 1968, pages 114-122, XP002036811 ISSN: 0036-8733 the whole document ---	1-8
X	BURGER W: "SIE DURFEN NICHT FUNKTIONIEREN, ABER WARUM?" TECHNISCHE RUNDSCHAU, HALLWAG VERLAG. BERN, CH, vol. 82, no. 19, 11 May 1990 (1990-05-11), pages 92-97, XP000127977 ISSN: 1023-0823 the whole document ---	1-8
	-/--	

[X] Further documents are listed in the continuation of box C.

[X] Patent family members are listed in annex.

° Special categories of cited documents :

"A" document defining the general state of the art which is not considered to be of particular relevance

"E" earlier document but published on or after the international filing date

"L" document which may throw doubts on priority claim(s) or which is cited to establish the publication date of another citation or other special reason (as specified)

"O" document referring to an oral disclosure, use, exhibition or other means

"P" document published prior to the international filing date but later than the priority date claimed

"T" later document published after the international filing date or priority date and not in conflict with the application but cited to understand the principle or theory underlying the invention

"X" document of particular relevance; the claimed invention cannot be considered novel or cannot be considered to involve an inventive step when the document is taken alone

"Y" document of particular relevance; the claimed invention cannot be considered to involve an inventive step when the document is combined with one or more other such documents, such combination being obvious to a person skilled in the art.

"&" document member of the same patent family

Date of the actual completion of the international search	Date of mailing of the international search report
31 January 2002	07/02/2002

Name and mailing address of the ISA	Authorized officer
European Patent Office, P.B. 5818 Patentlaan 2 NL - 2280 HV Rijswijk Tel. (+31-70) 340-2040, Tx. 31 651 epo nl, Fax: (+31-70) 340-3016	Ramos, H

INTERNATIONAL SEARCH REPORT

Interr al Application No
PCT/GB 01/03818

C.(Continuation) DOCUMENTS CONSIDERED TO BE RELEVANT

Category °	Citation of document, with indication,where appropriate, of the relevant passages	Relevant to claim No.
X	GB 2 298 319 A (WESTBOURNE ROBERT DOUGLAS) 28 August 1996 (1996-08-28) abstract; figures	1-8
X	PATENT ABSTRACTS OF JAPAN vol. 005, no. 003 (E-040), 10 January 1981 (1981-01-10) & JP 55 133686 A (HAGIYAMA HIROYUKI), 17 October 1980 (1980-10-17) abstract; figures	1-8
X	FR 2 720 878 A (BRUGUIERE GILBERT) 8 December 1995 (1995-12-08) figures	1-8

INTERNATIONAL SEARCH REPORT

nation on patent family members

Inte I Application No
PCT/GB 01/03818

Patent document cited in search report	Publication date	Patent family member(s)	Publication date
GB 2298319 A	28-08-1996	NONE	
JP 55133686 A	17-10-1980	NONE	
FR 2720878 A	08-12-1995	FR 2720878 A3	08-12-1995