(No Model.). 2 Sheets—Sheet 1.

S. J. & E. S. SHIMER.

TYPE WRITING MACHINE.

No. 563,080. Patented June 30, 1896.

Fig. 1.

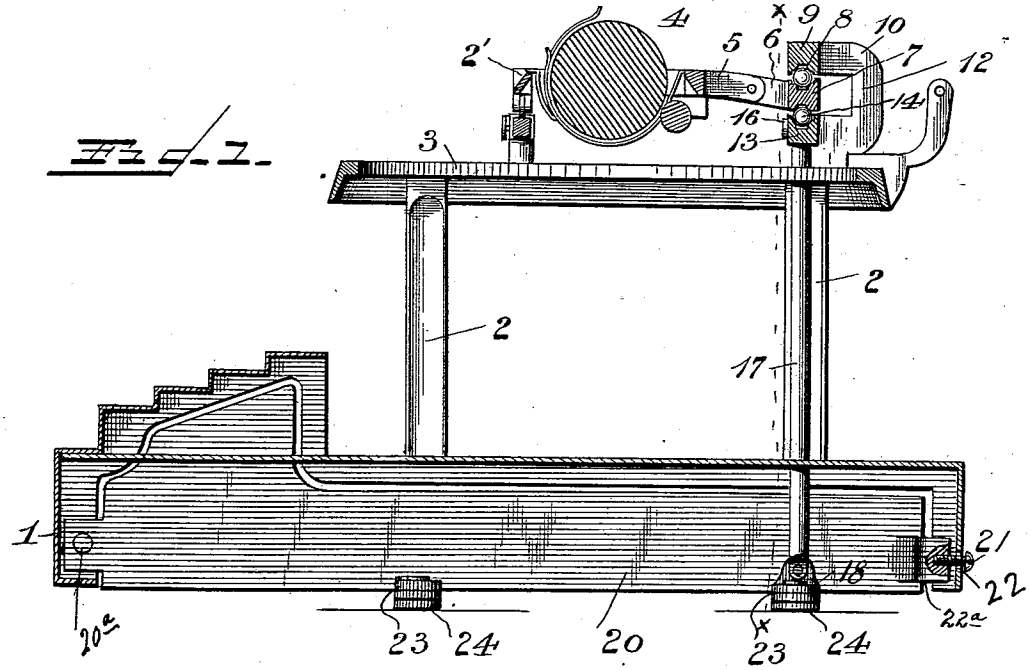

Fig. 5.

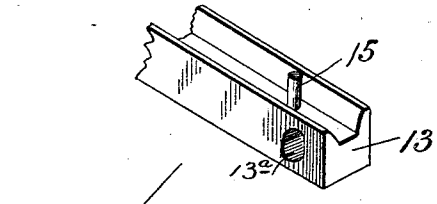

Fig. 3.

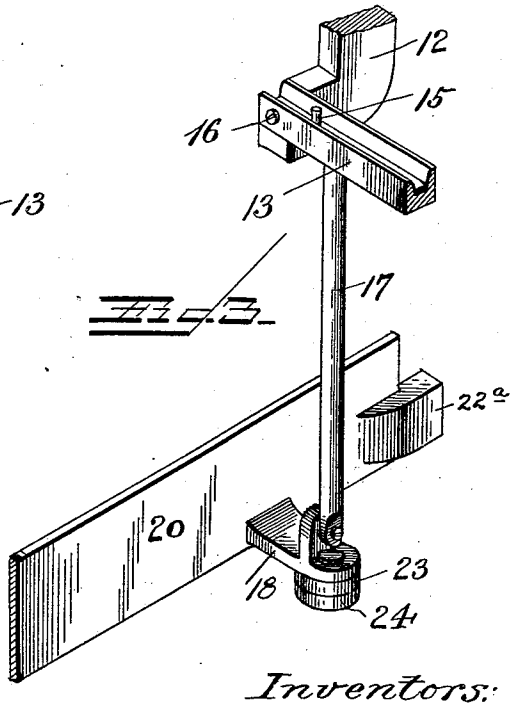

Witnesses:
Franck L. Durand.
Samuel Jones

Inventors:
Samuel J. Shimer,
Elmer S. Shimer,
by Laws Burger & Co.
Attorneys.

ANDREW B. GRAHAM, PHOTO-LITHO. WASHINGTON, D.C.

(No Model.) 2 Sheets—Sheet 2.

S. J. & E. S. SHIMER.

TYPE WRITING MACHINE.

No. 563,080. Patented June 30, 1896.

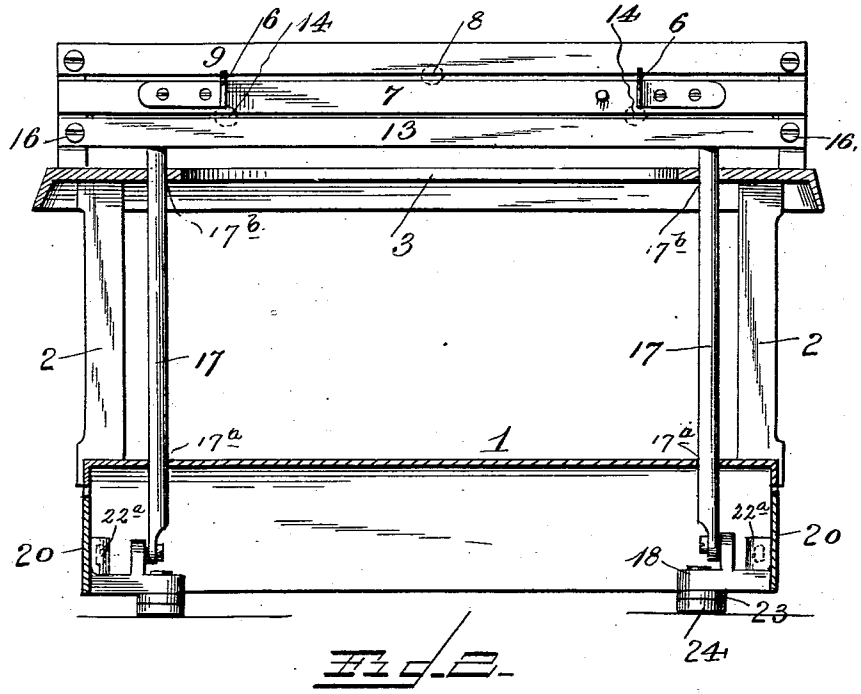

Fig. 2.

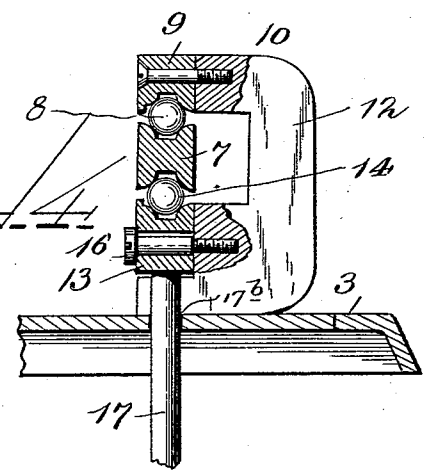

Fig. 4.

Witnesses:
Franck L. Ourand.
Bennett S. Jones

Inventors:
Samuel J. Shimer,
Elmer S. Shimer,
by Laws Bagger & Co.
Attorneys.

ANDREW B. GRAHAM, PHOTO-LITHO. WASHINGTON, D.C.

UNITED STATES PATENT OFFICE.

SAMUEL J. SHIMER AND ELMER S. SHIMER, OF MILTON, PENNSYLVANIA.

TYPE-WRITING MACHINE.

SPECIFICATION forming part of Letters Patent No. 563,080, dated June 30, 1896.

Application filed March 23, 1896. Serial No. 584,528. (No model.)

To all whom it may concern:

Be it known that we, SAMUEL J. SHIMER and ELMER S. SHIMER, citizens of the United States, and residents of Milton, in the county of Northumberland and State of Pennsylvania, have invented certain new and useful Improvements in Type-Writing Machines; and we do hereby declare that the following is a full, clear, and exact description of the invention, which will enable others skilled in the art to which it appertains to make and use the same, reference being had to the accompanying drawings, which form a part of this specification.

Our invention relates to improvements in type-writers of that class or description for which application for Letters Patent of the United States was made by Elmer S. Shimer on the 5th day of April, 1895, Serial No. 544,614. In said application the paper-carriage is shown and described as being connected with a flat traverse-rail, the sides of which are formed with longitudinal grooves, and a front and rear stationary rail, similarly grooved, a single ball being located in said grooves of the rear and traverse rails, at or near the center, and two balls being seated in the grooves in the front and traverse rails, and said balls being held under the proper degree of tension by spring-pressure of the rear rail.

The object of the present invention is to provide an improved construction of ball-bearings for the paper-carriage, whereby the said grooved rails are set edgewise, or one above the other, instead of side by side, as in said application, and the rigidity given to the ball-bearings by the weight or gravity of the machine itself.

The invention consists in the novel construction and combination of parts hereinafter fully described and claimed.

In the accompanying drawings, Figure 1 is a longitudinal sectional view of so much of a type-writer as is necessary to illustrate our invention. Fig. 2 is a cross-sectional view of the same on the line *x x*, Fig. 1. Fig. 3 is a detail perspective view showing one of the side bars which is pivoted to the front of the machine, the vertical rod connected therewith, and the lower grooved rail. Fig. 4 is a detail section of the traverse-rail and upper and lower guide-rails. Fig. 5 is a detail perspective view of the lower guide-rail.

In the said drawings the reference-numeral 1 designates the base of the machine, 2 the standards secured thereto, and 3 the top plate supported upon said standards.

We have not illustrated herein the typering, type-bars, and keyboard and connections, and other parts not forming any part of the present invention, as they may be of any ordinary or suitable construction.

The numeral 4 designates the paper-roll, and 2′ the rectangular frame thereof, which forms the paper-carriage, said frame being provided at its rear side with lugs 5, which are pivotally connected with lugs or brackets 6, secured to the reciprocating or traverse rail 7, so that the roll and frame may be raised or lifted up, so as to inspect the writing or work being done. The said rail in its upper and lower edges or sides is formed with a longitudinal groove, extending from end to end thereof, in which is similarly seated a single ball 8. Located above this traverse-rail and parallel thereto is a stationary guide-rail 9, correspondingly grooved and the ends of which are rigidly secured to arms 10 of brackets 12, secured to the top plate of the machine. The said ball also engages with or seats in the groove in said rail and forms the upper bearing for the paper-carriage. Below said reciprocating traverse-rail is also located a lower guide-rail 13, also grooved longitudinally from end to end, similarly to the aforementioned rails, and has its ends loosely secured to said brackets 12. Two balls 14 are interposed between said traverse and lower rails, and seated in the grooves thereof near each end and form the lower bearing for the paper-carriage. Pins 15 are secured to said rails 13 for centering said balls or holding them in their proper relative positions. The said lower rail is secured to the brackets 12 by means of set-screws 16, which pass through enlarged or elongated holes 13^a in the rail.

Passing through apertures 17^a in the top plate, at the rear thereof, are two perpendicular rods 17, the upper ends of which abut or bear against the under side of the lower rail 13, near the ends thereof. These rods also pass through apertures or holes 17^b in the base-plate 1, and their lower ends bear upon

and are supported by lugs 18, integral with the two side bases 20, to which the machine proper is hinged or pivoted at or near the front end by a pin 20^a. The side bases are connected with the rear of the base-plate 1 by means of stud-bolts 21, secured thereto, and passing through elongated holes 22 in the downwardly-depending rear portion of the base-plate. These bolts engage with correspondingly-threaded apertures in studs or lugs 22^a, at the rear ends of the side bars 20. These side bases are provided with feet 23, intermediate their ends, provided with elastic cushions 24, which rest upon the desk or table when the machine is in use. Or the side bases may be clamped to a drop-leaf of a desk or cabinet for holding the machine thereon.

When the machine is in use, the weight will be supported upon the cushioned feet of the two side bases of the machine. The rods 17 are preferably pivoted to the lugs 18, so as to allow them to have a slight play. By reason of the front pivotal connection of the side bars 20, the loose connection 21 at the rear, and the loose connection of the rail 13 the weight of the machine is practically suspended upon the ball-bearings.

The elongated holes near the ends of the lower ball traverse-rail and the elongated holes in the rear side of the base-plate of the machine permit the machine to bear by its weight upon the ball traverse-rail.

It will be seen from the above that the rigidity of the ball-bearing traverse-rail is caused by the weight of the machine, which, being constant and uniform, is not open to the same objections as a spring or springs.

Having thus fully described our invention, what we claim is—

1. In a type-writer, the combination with a paper-carriage, and the traverse-rail with which it is connected provided on opposite sides with longitudinal grooves, of the suspended rigidly-connected guide-rail similarly grooved, the loosely-connected grooved guide-rail and the balls seated in said grooves, whereby said adjustable rail is pressed against the balls seated in its grooves by the weight of the machine, substantially as specified.

2. In a type-writer, the combination with the paper-carriage and the traverse-rail connected therewith formed with longitudinal grooves in opposite sides, of the suspended rigidly-connected grooved guide-rail, the loosely-connected grooved guide-rail, the balls seated in said grooves, and loose connections between the machine-frame and its supports, whereby the rails and ball-bearings are subjected to a constant rigidity by the weight of the machine, substantially as specified.

3. In a type-writer, the combination with the paper-carriage and the traverse-rail connected therewith formed with longitudinal grooves in opposite sides, of the rigidly-connected suspended grooved guide-rail, the loosely-connected grooved guide-rail having elongated openings near its ends, the set-screws, the perpendicular rods bearing against said loosely-connected rail, the balls seated in said grooves and loose connections intermediate said rods and the frame whereby the weight of the machine subjects the loosely-connected guide-rail to a constant weight, substantially as specified.

4. In a type-writer, the combination with the paper-carriage, and the traverse-rail connected therewith formed on opposite sides with longitudinal grooves, of the rigidly-suspended grooved guide-rail, the loosely-connected guide-rail having elongated openings near the ends, the set-screws, the balls seated in said grooves, the pivoted side bases, the perpendicular supporting-rod to carry the weight of the machine suspended thereon, and the cushioned feet, substantially as specified.

5. In a type-writer, the combination of the base-plate, the top plate, the paper-carriage, the traverse-rail pivotally connected therewith, formed with longitudinal grooves, the rigidly-connected and loosely-connected grooved guide-rails, the centering-pins, the brackets secured to the top plate, the set-screws passing through elongated openings in said loosely-connected guide-rails, the balls seated in said grooves, the perpendicular supporting-rods bearing against the under side of the loosely-connected guide-rail, the pivoted side bases and the rear stud-bolts connected therewith and passing through elongated holes in the base-plate permitting the machine to rest upon the rods, substantially as specified.

In testimony that we claim the foregoing as our own we have hereunto affixed our signatures in presence of two witnesses.

SAMUEL J. SHIMER.
ELMER S. SHIMER.

Witnesses:
W. H. BECK,
C. F. BALLIET.