E. C. STAPLES.

METALLIC SHELVING.

APPLICATION FILED JAN. 17, 1919.

1,336,490.

Patented Apr. 13, 1920.

2 SHEETS—SHEET 1.

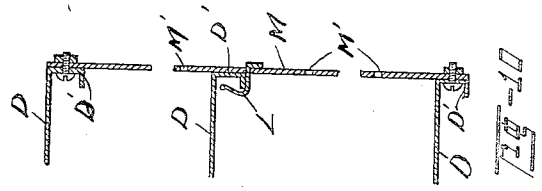

Fig. 10

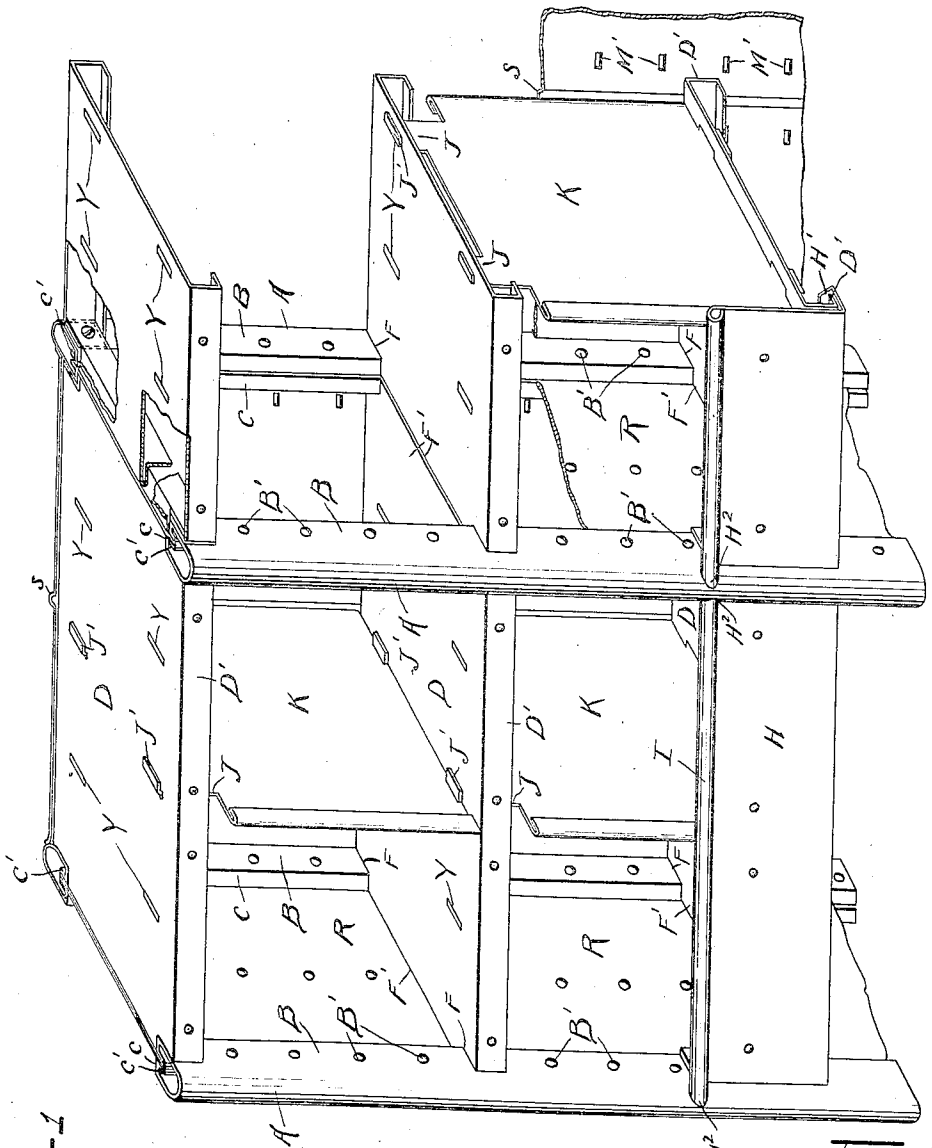

Fig. 1

Inventor

E. C. Staples

By Hull Smith Brock & West

Attys.

E. C. STAPLES.

METALLIC SHELVING.

APPLICATION FILED JAN. 17, 1919.

1,336,490.

Patented Apr. 13, 1920.

2 SHEETS—SHEET 2.

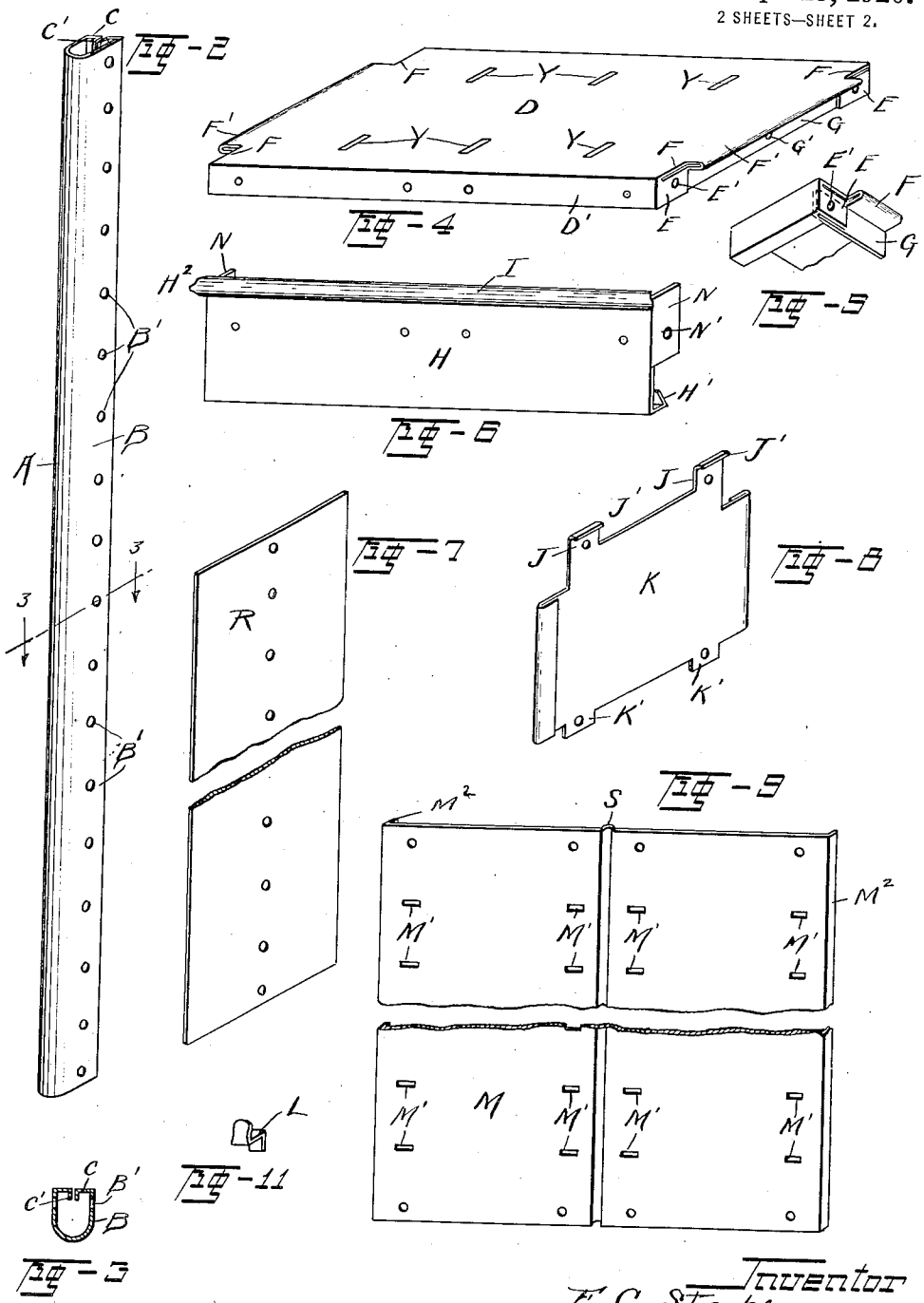

Inventor

E. C. Staples

By Hull Smith Brock & West

Attys.

UNITED STATES PATENT OFFICE.

EDWARD C. STAPLES, OF CANTON, OHIO, ASSIGNOR TO THE HYDRAULIC PRESSED STEEL COMPANY, OF CLEVELAND, OHIO, A CORPORATION OF OHIO.

METALLIC SHELVING.

1,336,490. Specification of Letters Patent. Patented Apr. 13, 1920.

Application filed January 17, 1919. Serial No. 271,587.

To all whom it may concern:

Be it known that I, EDWARD C. STAPLES, a citizen of the United States, residing at Canton, in the county of Stark and State of Ohio, have invented a certain new and useful Improvement in Metallic Shelving, of which the following is a full, clear, and exact description, reference being had to the accompanying drawings.

This invention relates to metallic shelving construction, the object of the invention being to provide an all metal shelving construction in which the parts when in assembled relation are rigidly held together, and the parts being so constructed that in putting the shelving together, simplified construction is obtained.

Other objects of the invention will appear as the description proceeds.

Generally speaking, the invention may be said to comprise the elements and combinations thereof set forth in the accompanying claims.

Reference should be had to the accompanying drawings forming a part of this specification in which Figure 1 is a perspective view showing the assembled shelving; Fig. 2 is a perspective view of upright members employed in the construction; Fig. 3 is a sectional plan view of the upright members shown in Fig. 2; Fig. 4 is a perspective view of a shelf; Fig. 5 is a perspective view showing a detail of construction of the shelf; Fig. 6 is a perspective view showing a front wall structure or bin front; Fig. 7 is a perspective view showing a side wall plate; Fig. 8 is a perspective view of a compartment divider; Fig. 9 is a perspective view of a rear wall; Fig. 10 is an edge view showing the manner in which the shelves and back coöperate; and Fig. 11 is a perspective view of a clip.

Referring to the drawings, the upright supporting members to which the shelves are attached are indicated at A, each upright member having a rounding front with substantially parallel side walls B and a rear wall C which is formed by flanges inturned from the sides B, the inner ends of the flanges being folded to provide substantially parallel projecting portions indicated at C'. Thus it will be seen that each upright is formed with a longitudinally extending split which has a purpose to be explained later.

The faces of each upright are provided with equally or substantially equally spaced holes B', the holes in each face being alined with corresponding openings in the opposite face of the upright.

The faces B and C of the upright extend at substantially right angles with respect to each other.

The shelves which coöperate with the uprights are indicated at D, each shelf comprising a substantially flat portion, the edge being turned down at the front and at the back as indicated at D', the turn-down portions D' having an inwardly extending flange so that the front and rear portions of the shelf are folded so as to be substantially channel shaped. This imparts rigidity to the shelf and prevents sagging of the shelf when the shelf is loaded.

At the opposite ends each shelf is notched out as indicated at F, and between the notched out portions there is an extension F'. This extension is formed by folding the metal at the forward edge of the extension back upon itself in a reverse fold, and from the reversely folded portion there extends downwardly a flanged portion G, which at its ends extends within the channel shaped portions D' formed at the front and rear of each shelf.

A portion of the front depending flanged portion D' of the shelf has the lower portion cut away, and the remaining portion is folded back against the flange G as indicated at E in Figs. 4 and 5.

This construction which has just been described, is duplicated at the four corner portions of each shelf, and at the corner portions there is provided a hole, indicated at E', for attaching purposes.

In assembling the shelves with respect to the uprights, each corner portion of a shelf fits against an upright A, the notched portion of the shelf fitting against the post and engaging with a side face B and a rear face C of each post.

When shelves upon the opposite sides of the post are assembled, a common bolt extends through an opening E' through a se-

lected opening B′, to the opposite side of the post where an opening E′ of a companion shelf is engaged by the same bolt, after which the nut for the bolt is put in place and the nut tightened. When the nut is tightened it draws the shelves very closely into contact with the uprights, and when the four corners of each shelf are thus secured, there is provided a very rigid structure, for the particular manner of engagement between the shelves and the uprights prevents any twisting or turning, and thereby produces rigidity.

Attention is called to the fact that in the construction described, there are no spacing rods employed between adjacent posts, as there is no necessity for the same because the structure is entirely rigid without the use of such spacing rods, and because of the channel shaped flange construction at the front and rear portions of the shelves there is no tendency for the shelves to sag between the posts.

Furthermore, the construction employed at the ends of the shelves because of the folding back of the metal upon itself and the depending flange G at the ends of the shelf withstands whatever tendency there may be for the shelf to sag at this portion when loaded.

Of course it will be obvious that the shelves D may be spaced vertically with respect to each other any desired distances, this merely involving a proper selection of the holes B′ in the upright A.

In order to provide a partition for dividing the compartments at the posts, there is provided a plate R, such as shown in Fig. 7. This plate is adapted to be inserted between the flanged portions C′ of a front and back upright member A. The plate when inserted between the flanged portions engages these portions by a frictional engagement, and when the bolt which holds the shelves to the upright is tightened, the frictional engagement of the flanges C′ upon the plate R is increased, and so the plate is held in position with respect to the upright members.

It should be explained that the portions F′ upon the shelves are slightly shorter than the width of the portion C of each upright, so that when the shelves are assembled with respect to the uprights, there is a slight space left between the oppositely disposed portions F′ of adjacent shelves, thus providing a space through which each partition member R may be extended.

If desired, the plates R may be provided with substantially centrally arranged holes or openings which are adapted to coöperate with openings G′ formed in the flanges G at the end portions of the shelves D. the openings thus described being adapted to receive a bolt or other fastening means which may thus secure or attach the plates R to the shelves.

A rear closure member for the shelving consists of a plate M. This plate M is at its ends or edges provided with flanged portions M^2, these flanged portions stiffening the plate at the edges. At substantially the central portion the plate is folded with a more or less open fold, as indicated at S. This construction provides a ridge or rib which materially stiffens the plate at the central portion thereof.

The plate is also provided with rows of openings or slots M′ which are adapted to receive clips for holding the shelves to the rear closure member, as will be later explained.

Each rear closure member is preferably of the same width as the shelves so that each closure member extends between adjacent upright members A.

As before explained, each of the shelves at the front and rear portion thereof is provided with a flange D′. As shown in Fig. 10, such a flange D′ engages with the back plate M, and for the purpose of holding the shelf and the back and preventing bulging of the back, a clip L of substantially the form shown in Figs. 10 and 11 may be inserted through a suitable opening M′ in the plate M, and the front portion snapped up over the inwardly extending portion of the flange D′.

It will be obvious that the clip L when thus employed, will hold the shelf in close contact with the back.

The back plate M may be secured at its top and bottom to the flanges D′ of each shelf by means of suitable nuts and bolts, or any equivalent means as suggested in Fig. 10.

The compartments, and by the term "compartment" I refer to the space inclosed between an upper and lower shelf and the side plates R supported between adjacent sets of posts, may be divided if desired, by a compartment divider, such as indicated at K. Obviously it is desirable that such a compartment divider shall be movable within the compartment so that the compartment may, if desired. be divided into portions of different capacity.

In order to provide such an adjustable or removable compartment divider, I construct the compartment divider of a plate portion, which at the front and rear end portions is folded back upon itself so as to stiffen the edge and prevent buckling.

At the upper end or portion of the compartment divider there are upwardly extending projections J, which extensions at their outer portions are provided with flanges J′, which may be two or more.

The lower portion of each compartment divider is provided with projections K′ which are shorter in length than the projections J and of which there may be two or more.

The shelves are all provided with longitudinally extending slots such as are indicated at Y in the drawings, and these slots are similarly arranged on each of the shelves so that the slots of an upper and lower shelf are in substantially vertical alinement.

In inserting a compartment divider the flanges J′ are first inserted through a pair of slots Y in an upper shelf, then the compartment divider K is swung into substantially vertical position and elevated until the lower projections K′ are in position to extend through a pair or more of slots formed in the lower shelf. Then the compartment divider is dropped and by the engagement of the projections J and K′ with the slots in the upper and lower shelves, the compartment divider is held in proper place.

The projections J and K′ are provided with holes or openings which when the compartment divider is in place are just below the upper and lower shelf with which the compartment divider coöperates. These openings are adapted to receive bolts or other fastening means which may be inserted to hold the compartment divider against displacement.

As shown in the drawings, three sets of slots Y are provided longitudinally in each shelf. Obviously a greater number or less number may be provided, both cross wise and longitudinally, the object in providing a multiple number of sets of openings in the shelves being to permit a variation in the position of the compartment divider, and the number of slots in the shelf and the increased number of lugs J and K′ increase the rigidity of the compartment divider and increase the resistance against buckling.

The construction which has heretofore been described, provides for metallic shelving which is divided into compartments, and if it be desired to close or partially close the front of the several compartments so as to provide a bin construction, I accomplish this by using such a member as is shown in Fig. 6 and indicated at H. This member H comprises a front plate portion which at its lower edge is provided with a rearwardly extending channel shaped portion H′, the extension differing from a channel in that the rear fold of the extension is inclined toward the face H.

Extending rearwardly from the face H, adjacent the upper portions thereof, are flanges N which are provided with openings such as indicated at N′. The upper portion of the plate H is beaded as indicated at I, and the beaded portion extends slightly beyond the vertical edges or ends of the portion H for the purpose of forming stops or shoulders as will presently be explained.

When the bin front is assembled with respect to the uprights and shelves, the flanged extensions H′ coöperates with the lower channel shaped extension D′ upon a shelf. This holds the bin front against bulging.

The flanges N are brought into position against the faces B of the posts A with which the ends of the bin front coöperate, and as the flanges N are brought into position, the extensions H^2 at the top of the bin front overlap and engage with a part of the rounded portion A of each upright. These extensions H^2 thus form stops which limit the inward movement of the bin front, and as they extend partly around and conform to the rounded portion A of the uprights, they give a finished appearance to the structure as a whole.

The flanges N for each bin front are secured to an upright, and where bin fronts are used upon opposite sides of a post a common bolt may be inserted through the opening N′ in the flange of one bin front, extending through one of the openings B′ in the upright and through the opening N′ of the adjacent bin front thus a single bolt serving to hold both bin fronts with respect to the upright.

It will be obvious that it will not be necessary to use all the parts of the metallic shelving described, at the same time. For instance, if an open continuous shelf structure be desired, the compartment dividers may be dispensed with as well as the bin fronts, and if the shelving embodies a number of units, the end plate between the units may be omitted so as to provide open continuous shelf construction.

It will be also obvious that the back plates may be dispensed with where shelves open upon the front and back if desired, and the bin fronts as well as the compartment divider need only be used where their use is desirable or necessary.

Having thus described my invention, what I claim is:—

1. A metallic shelving construction comprising corner upright members provided with angular portions, a shelf having the corners notched out and having depending flanges at the notched out portions, the said shelf engaging the upright members at the notched out portions, the notched out portions fitting around the angular portion of the uprights, and means for securely holding the shelves to the upright members, whereby the shelves and the uprights form a rigid structure.

2. In a metallic shelving construction, the

combination with upright posts for the corners, a shelf having notched out portions at the corners, said shelves having channel shaped, downwardly extending flanges at the front and rear thereof, and having notched out portions at the corners, the side between the notched out portions being formed by reversely bending the metal upon itself to stiffen the projecting portion between the notched out parts and having a depending flange, the notched out portions of the shelf engaging with the said angular portions of the upright, and means for holding the shelves and the upright whereby a rigid structure is provided.

3. In a metallic shelving construction, upright corner members, each upright member comprising a side and rear portion which extend at an angle with respect to each other, a shelf having notched out corner portions, each of said shelves being provided with a substantially channel shaped extension at the front and rear thereof, said shelves at their sides having an extension between the notches which is formed by a reverse fold in the metal forming said extension, there being a downward flange beneath the extension between the notches, a portion of the downwardly extending end extensions of each shelf being folded upon the downward flange at the ends of each shelf, the notched out portion of each shelf being adapted to engage with one of the uprights at the angular surfaces thereof, and means for securing the shelves to the uprights whereby there is secured a rigid structure.

4. In a metallic shelving construction, uprights forming the corners thereof, the said uprights having angularly extending surfaces, a shelf having a downwardly extending portion at the front and rear thereof, the ends of the shelf being provided with extensions which are notched out at the ends thereof, said extensions being formed by a reverse fold in the middle forming the extension, and provided with a downwardly extending end flange, the end portion of the downward extension at the front and rear of the shelf being folded back upon the downward extension at the ends of the shelf, the notched portions of the shelves being adapted to engage the uprights at the angular surfaces of said uprights, and means for securing the downwardly extending flanged portion at the end of the shelf to the said uprights whereby there is provided a self-contained rigid structure.

5. In metallic shelving construction, upright corner members, said upright corner members being provided with a longitudinal split at the inner sides thereof, end partitions or plate members, the opposite edges of said partition members being adapted to extend into the split of oppositely disposed posts, shelves having portions adapted to engage the upright members, and means for securing the shelves to the posts, the said means serving to clamp the end plates or partition members so that they are supported by the frictional engagement between the posts and the plates.

6. In a metallic shelving construction, the combination of upright members forming corners, an upper and lower shelf, means for supporting the said shelves from the said upright members, the said shelves being formed with oppositely disposed slots, openings therein, a compartment divider having projections at the upper and lower edges thereof, the projections at the upper edge being longer than those at the lower edge, the projections for the upper edge of the compartment divider being provided with flanges, the upper and lower projections of the compartment divider being adapted to be inserted in the slots or openings of the upper and lower shelf, with the flanges of the upper projections overlying a portion of the top shelf, the projections upon the compartment divider being provided with openings which when the compartment divider is in position are below the upper shelf and the lower shelf respectively, whereby means may be inserted through said openings to hold the compartment divider in place.

In testimony whereof, I hereunto affix my signature.

EDWARD C. STAPLES.