(12) UK Patent Application (19) GB (11) 2 136 255 A

(43) Application published 12 Sep 1984

(21) Application No 8304900

(22) Date of filing 22 Feb 1983

(51) INT CL³
H05K 5/00 H04N 5/64

(52) Domestic classification
H4T BRA

(56) Documents cited
GB 1567348 GB 1560824
EPA 0040754

(58) Field of search
H4T
H1R

(71) Applicant
Roar Dahl Knudsen,
Aaslien, 1745 Skjeberg, Norway

(72) Inventor
Roar Dahl Knudsen

(74) Agent and/or Address for Service
Haseltine Lake & Co., Hazlitt House, 28 Southampton Buildings, Chancery Lane, London WC2A 1AT

(54) **Video games**

(57) A video game cabinet comprises a video screen 1, a control panel 2 and a coin-operated mechanism 4 mounted on a hinged door 5 above a cash-box compartment 6. A game board and/or game system is mounted on a support board 9 which is readily slidable into and out of the cabinet along slides 10 and 11 through an opening in the front panel 3 of the cabinet which is normally closed by a door 8. This arrangement facilitates alteration or exchange of the game board and/or game system without it being necessary to modify the construction of the cabinet.

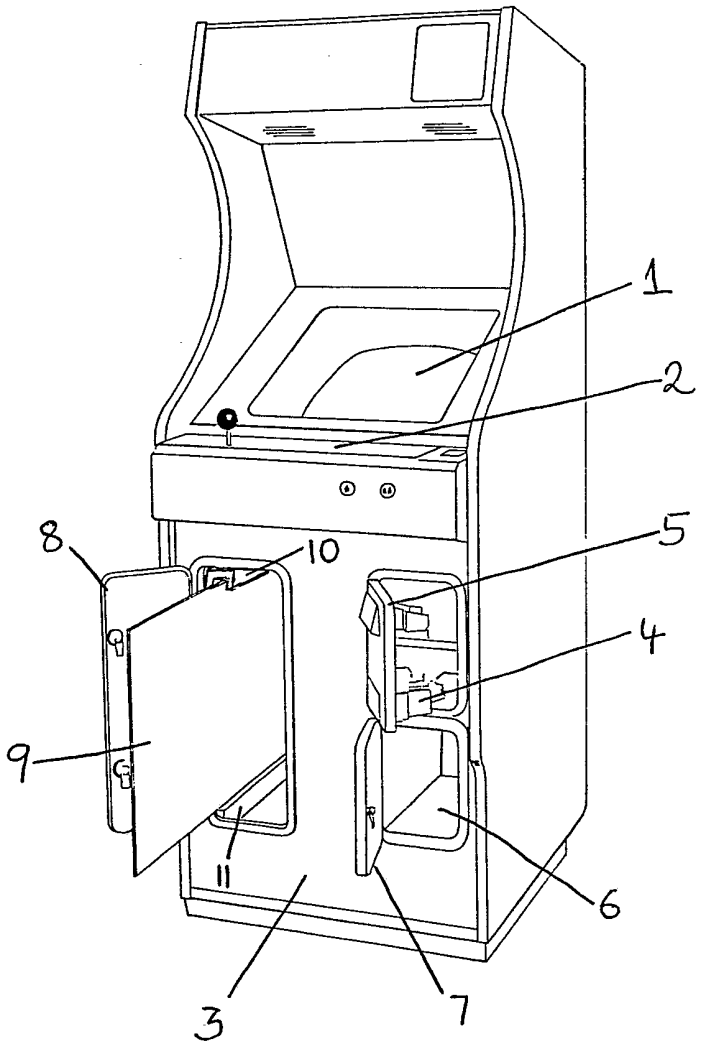

GB 2 136 255 A

The claims were filed later than the filing date within the period prescribed by Rule 25(1) of the Patents Rules 1982.

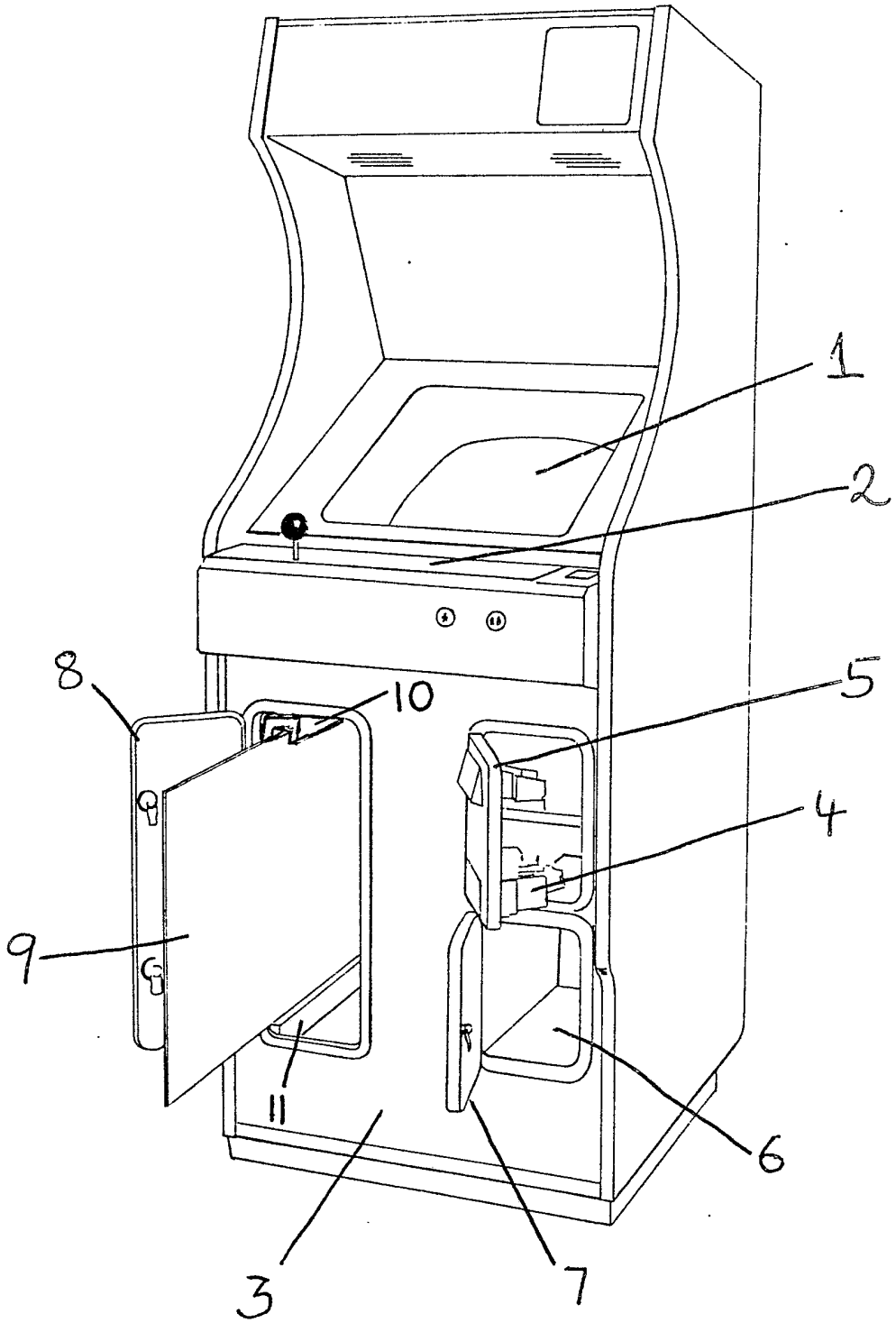
1
2
8
10
5
4
9
11
6
3
7

SPECIFICATION

Video games

This invention relates to video games, and is particularly concerned with video game cabinets and/or machines.

In recent times a substantial industry has grown-up of designing video games. Numerous such games are now available, and prove to be more or less successful depending on public reaction. Some games will be more popular than others, and moreover particular games will come into and go out of popularity as fresh games are designed.

Video game cabinets and/or machines are conventionally constructed and built-up around a specific logic board (known as a game board) or, in a more recent development, around a specific game system within which games are interchangeable within the particular limitations of the specific game system. This can be achieved in some cases simply by inter-changing game-defining tape cassettes on a standard logic board.

The conventional arrangements have the disadvantage that substantial rebuilding work may be necessary in connection with the video game cabinet and/or machine itself in order to change the nature of the provided games or the games themselves, or in order to change the provided interchangeable-game systems. Specific game logic boards and interchangeable-game systems can be, and usually are, constructed very differently to one another considered from a technical view point, and there is required substantial reconstruction in connection with the total function of a cabinet or machine if game logic boards and/or interchangeable-game systems are to exchanged with one another within a conventional video game cabinet and/or machine.

According to one aspect of the present invention there is provided a video game cabinet and/or machine comprising a game board and/or game system mounted on a support board or panel which is mounted in the video game cabinet and/or machine in such manner as to be readily withdrawable from the cabinet and/or machine in order to facilitate an alteration or exchange of the gameboard and/or game system.

According to another aspect of the invention there is provided an arrangement for a coin operated video game cabinet, in which a game board itself or an interchangeable game board system, together with a power supply, wiring harness etc. is mounted on an assembly board which is arranged so that it can be disconnected from the cabinet and from other parts such as a video monitor screen, operator's control panel and a coin insert system in connection with the total function of the machine.

An embodiment of the invention may provide a video game cabinet and/or machine in which different type of game logic boards and/or different interchangeable-game systems can be employed and interchanged without any complicated conversion of the cabinet and/or machine.

For a better understanding of the invention and to show how it may be put into practice reference will now be made by way of example to the accompanying drawing which shows an embodiment of the present invention.

The single figure shows a video game cabinet and machine of a general type easily recognisable and understood by a man skilled in the art. Such video game cabinets and machines are now widely installed in public amusement arcades, pubs and clubs.

The cabinet houses a video screen 1, and conventional controls on a player's control panel 2. A front panel 3 of the cabinet contains a conventional coin-operated mechanism 4 mounted on the rear of a hinged door 5 which is shown open. A cash-box compartment 6 protected by a hinged door 7 (also shown open) is arranged below the coin-operated mechanism 4 when the door 5 is closed.

The cabinet front panel 3 also comprises a further door 8. Inside this door 8, when closed, is arranged an assembly board 9, for carrying electronic components such as a game logic board and/or an interchangeable-game system, a power supply, wiring harness etc, none of which is shown for the sake of clarity. Inside the doorway associated with the door 8 are mounted upper and lower slides 10 and 11 which extend parallel to one another, one vertically above the other, horizontally backwards into the cabinet from the front panel 3. The upper and lower edges of the board 9 are slidably retained in grooves in the slides 10 and 11 so that the complete assembly board 9 can be plugged out-of and into the cabinet. In this manner, different interchangeable assembly boards can be slid into and out of the cabinet as required. The assembly board 9 will merely have to be connected with a plug or other connector for connecting the circuitry thereon with, for example, mains electricity, the videoscreen 1, the operator's control panel 2 and the coin insert mechanism 4. It is a feature common to all suitable different assembly boards carrying different game logic boards and/or interchangeable-game systems that the electrical connectors/plugs for providing the connections with the video screen 1, the operator control panel 2 and the coin mechanism 4 are the same, so that all the different boards are automatically adapted to these basic items in the cabinet.

As a result of the described arrangement it is possible to change the type of game and/or game system without it being necessary to purchase a new cabinet or to perform time-consuming cabinet rebuilding work. The only operation necessary is to replace the complete assembly board 9 carrying the electronic circuitry for one game and/or game system, by another board with the same dimensions and external electrical connections, but carrying the electronic circuitry for another game and/or games system.

In an alternative type of arrangement a single

board 9 may be employed and is not exchanged with any other such board. The circuitry on this single board may be altered or changed in order to provide a different game and/or game system. In some cases it will be possible to use a single board 9 on which it is merely necessary to change a cassette in order to provide a different game within an interchangeable-game system.

It will be appreciated that with the aid of an embodiment of the present invention it is possible to change a video game and/or game system without having to call in an expert technician. One need only replace a complete assembly board by another complete assembly board. The new assembly board will merely have to be slid through the doorway associated with the door 8 on the slides 10 and 11, and connected with a plug for connecting the board electrically to mains electricity, the video screen 1, the player operator's control panel 2 and the coin insert mechanism 4 of the cabinet. In an alternative embodiment employing a single board 9 as described above, again no expert technician will be required if merely a cassette is to be changed. Even if the single board 9 is such as to require a technician to alter it or to change circuitry thereon, nevertheless the easy accessibility of the board 9 greatly facilitates such work and the time which it takes, by virtue of the board 9 being slidable out-of and into the cabinet as required.

In the Figure the door 8 is shown open with the assembly board 9 partially withdrawn. In normal use the board 9 is pushed along the slides 10 and 11 so as to be wholly within the cabinet, the door 8 being closed.

It is to be noted that the particularly described slidable mounting of the board 9 behind door 8 is not an essential feature. In alternative embodiments the board 9 could be screwed e.g. to an internal side wall of the cabinet and could be accessible e.g. from the rear of the cabinet. This board would be readily withdrawable and exchangeable by an unskilled man in order to change the game or game system. A skilled man could possibly simply alter the circuitry on the board after its withdrawal.

CLAIMS

1. A video game cabinet and/or machine comprising a game board and/or game system mounted on a support board or panel which is mounted in the video game cabinet and/or machine in such manner as to be readily withdrawable from the cabinet and/or machine in order to facilitate an alteration or exchange of the game board and/or game system.

2. A cabinet and/or machine according to claim 1, wherein the support board or panel is slidably mounted in the video game cabinet and/or machine in such manner as to be readily withdrawable from the cabinet and/or machine.

3. A cabinet and/or machine according to claim 2, wherein the support board of panel has at least one edge thereof slidably retained on an associated slide member.

4. A cabinet and/or machine according to claim 3, wherein the support board or panel has two opposed edges slidably retained on respective slide members.

5. A cabinet and/or machine according to claim 3 or 4, wherein said one edge of the support board or panel is a lower edge and the support board or panel rests upon the associated slide member.

6. A cabinet and/or machine according to claim 5, wherein the support board or panel is arranged in a substantially upright orientation in the cabinet and/or machine.

7. A cabinet and/or machine according to any of claims 3 to 6, wherein the or each slide member comprises a groove to hold slidably in the groove an edge of the support board or panel.

8. A cabinet and/or machine according to a combination of claims 4, 5 and 6, or of claims 4, 5, 6 and 7, wherein there are upper and lower slide members which extend substantially parallel to one another, one substantially vertically above the other, extending substantially horizontally in the cabinet and/or machine.

9. A cabinet and/or machine according to any preceding claim, comprising an opening specifically provided to enable the withdrawal of the support board or panel through the opening.

10. A cabinet and/or machine according to claim 9, wherein the opening is provided in a front wall of the cabinet and/or machine.

11. A cabinet and/or machine according to claim 9 or 10, wherein the opening is provided with an openable and closable door.

12. A cabinet and/or machine according to any preceding claim, wherein circuitry carried on the support board or panel is connected by a plug or other connector to other parts of the cabinet and/or machine.

13. A cabinet and/or machine according to claim 12, wherein said other parts include at least one of a mains electricity input, a videoscreen, an operator's control panel and a coin insert mechanism.

14. A cabinet and/or machine according to any preceding claim, wherein the support board or panel is fully withdrawable from the cabinet so as to be completely replaceable by another such board or panel carrying a different game board and/or game system.

15. A cabinet and/or machine according to claim 14, when in combination with a plurality of support boards or panels carrying different game boards and/or game systems.

16. A cabinet and/or machine according to any of the preceding claims, wherein the support board or panel carries a game board and/or game system which can be modified after withdrawal of the support board or panel in order to provide a different game or games.

17. A cabinet and/or machine according to claim 16, wherein the game board and/or system can be modified as aforesaid by replacing one game-defining cassette by another.

18. A video game cabinet and/or machine substantially as hereinbefore described with

reference to the single figure of the accompanying drawings.

19. An arrangement for a coin operated video game cabinet, in which a game board itself or an interchangeable game board system, together with a power supply, wiring harness etc, is mounted on an assembly board which is arranged so that it can be disconnected from the cabinet and from other parts such as a video monitor screen, operator's control panel and a coin insert system in connection with the total function of the machine.

Printed in the United Kingdom for Her Majesty's Stationery Office, Demand No. 8818935, 9/1984. Contractor's Code No. 6378.
Published by the Patent Office, 25 Southampton Buildings, London, WC2A 1AY, from which copies may be obtained.