P. J. DALTON.

RAIL JOINT.

APPLICATION FILED FEB. 14, 1908.

1,068,631.

Patented July 29, 1913.

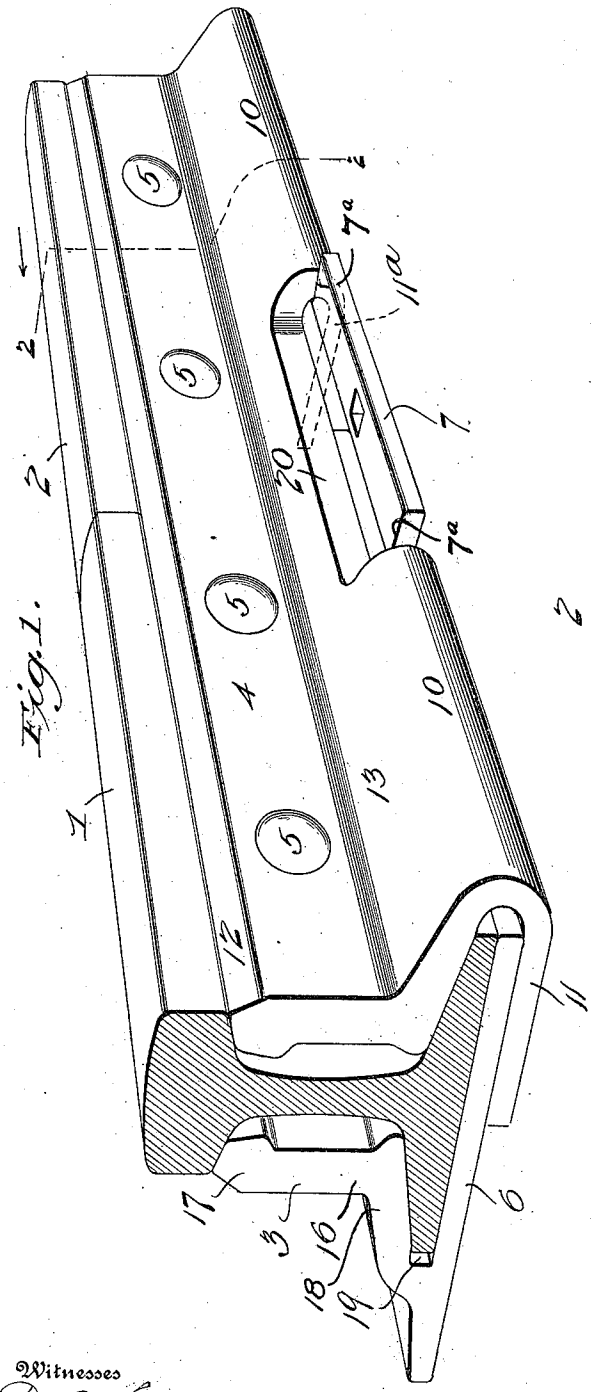

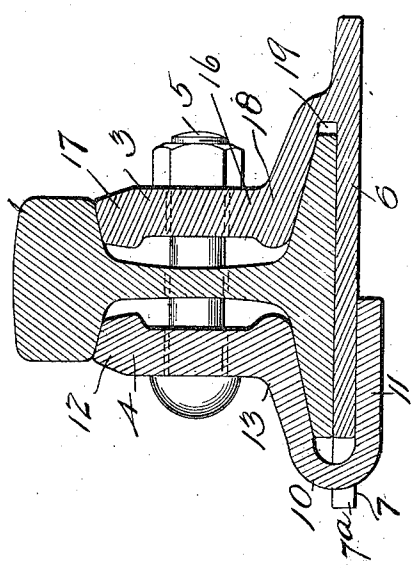

Witnesses

T. L. Mockabee

R. C. Braddock.

Inventor

Philip J. Dalton

By D. P. Wolhaupter.

Attorney

COLUMBIA PLANOGRAPH CO., WASHINGTON, D. C.

UNITED STATES PATENT OFFICE.

PHILIP J. DALTON, OF JOLIET, ILLINOIS, ASSIGNOR TO THE RAIL JOINT COMPANY, OF NEW YORK, N. Y., A CORPORATION OF NEW YORK.

RAIL-JOINT.

1,068,631. Specification of Letters Patent. Patented July 29, 1913.

Application filed February 14, 1908. Serial No. 415,816.

To all whom it may concern:

Be it known that I, PHILIP J. DALTON, a citizen of the United States, residing at Joliet, in the county of Will and State of Illinois, have invented certain new and useful Improvements in Rail-Joints, of which the following is a specification.

This invention relates to rail joints, and particularly to that type embodying a rail supporting base or base plate.

As a general object the invention has in view the provision of a simple and practical construction of rail joint in which the parts are so related and combined as to effectually secure the same against relative movement, while at the same time maintaining a firm bearing contact between the various parts constituting the joint.

One of the special and distinctive objects of the invention is to provide a construction wherein the rail supporting base plate is securely clamped beneath the rails in such a manner as to correct and obviate any tendency of the unsupported or free edge portion of the base plate from springing or being forced away from a firm bearing contact beneath the rails. Also, in this connection, the invention contemplates a novel construction of joint bar possessing special utility as the inner joint bar in connection with an outer joint bar having a rail supporting base plate extending entirely beneath the rail bases, said inner joint bar being so designed as to provide an effective clamp for the unsupported edge portion of the rail supporting base plate, while also materially stiffening and reinforcing the joint.

With these and other objects in view which will more readily appear to those familiar with the art as the nature of the invention is better understood, the same consists in the novel construction, combination, and arrangement of parts hereinafter more fully described, illustrated, and claimed.

In the drawings, Figure 1 is a sectional perspective view of a rail joint embodying the improvements contemplated by the present invention. Fig. 2 is a cross sectional view of the joint on the line 2—2 of Fig. 1. Like references designate corresponding parts in the several figures of the drawings.

Referring to the illustrated embodiment of the invention shown in the drawings, the joint illustration therein includes in its organization the usual service rails 1, 2, the oppositely arranged joint bars 3 and 4, and the usual joint bolts 5. The outer joint bar 3 is preferably of the well known continuous design, that is to say the said bar is provided with an upright member 16 constructed at its upper edge with a bearing head 17 and at its lower edge with an outwardly extending foot flange 18 having formed integral therewith the inwardly extending rail supporting base plate 6, there being a continuous flange-receiving pocket or space 19 provided between the flange 18 and the base plate 6. In this type of joint, the rail supporting base plate 6 extends entirely beneath and across the rail bases so as to afford a full-width base support for the rails resting thereon. The said base plate 6 is of sufficient width so as to project beyond the inner edges of the rail flanges, at which point the inner edge of the same is provided with a central projecting part 7 for spiking and which spiking part presents transversely disposed shoulders 7^a at opposite edges thereof.

The joint bar 4 is preferably adapted to be arranged at the inner side of the joint, and in general design preserves the form of the conventional angle bars, the same being provided at its upper edge with the usual bearing head 12 and at the lower edge of its upright member with a foot flange 13 overlying the rail flanges. At its opposite end portions, the said bar 4 is provided with horizontally arranged clamping base flange sections 11—11, with the central portion of the foot flange 13 between said sections cut away or notched as at 20 to receive and interlock with the central projecting part 7 of the base plate 6. The connecting bights 10 between the base flange sections 11 and the foot flange 13 are disposed in opposition to the shoulders 7^a at opposite side edges of the central projecting part 7 of the base plate 6. This interlocking construction prevents relative longitudinal displacement of the joint parts, while the base flange sections 11—11 constitute firm supporting means for the unsupported edge portions of the base plate 6. In further reference to the function of the base flange sections 11—11, it will be observed that by reason of the general angle formation of the joint bar 4, the tightening up of the joint bolts causes the foot flange 13 to rise upon the flanges of the rails, with the result of exerting a lifting force

upon the base flange sections 11, thus causing the said base flange sections to clamp and bind firmly beneath and against the edge portion of the base plate. This clamping action necessarily serves to firmly hold the base plate securely clamped beneath the rails in such a manner as to correct and obviate any tendency of the base plate to spring or be forced away from its firm bearing contact beneath and against the rail bases.

I claim:

A rail joint comprising, in combination with the rails, a pair of oppositely located adjustable joint bars of angle formation, one of said bars having a base plate extending the full width of the rail bases and provided at its edge with a central projecting part for spiking, and the other of which bars is provided at its opposite end portions with base flange sections folded beneath the base plate of the other bar and lying respectively upon opposite sides of said central projecting part of the base plate.

In testimony whereof I hereunto affix my signature in the presence of two witnesses.

PHILIP J. DALTON.

Witnesses:

GEORGE H. BROOKE,

BENJ. WOLHAUPTER.

Copies of this patent may be obtained for five cents each, by addressing the "Commissioner of Patents, Washington, D. C."