Dec. 5, 1933. G. E. MEGOW 1,938,395

RHEOSTAT

Filed Dec. 16, 1929 2 Sheets-Sheet 1

Fig. 1.

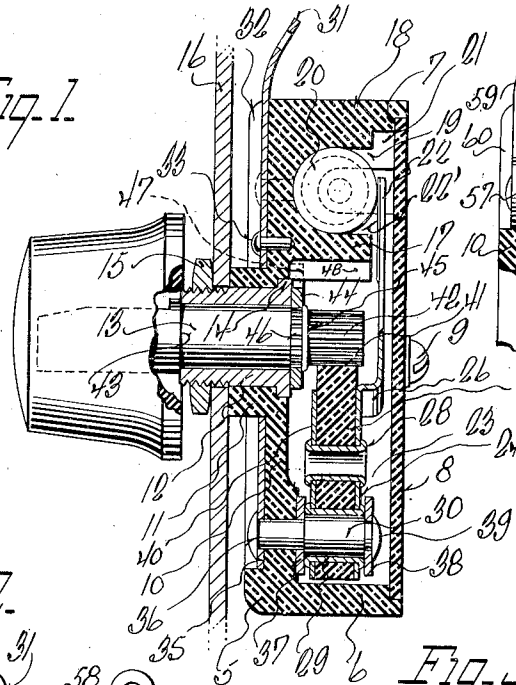

Fig. 4.

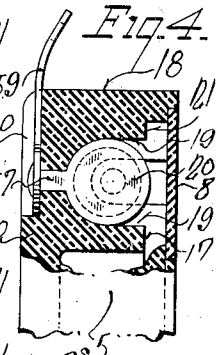

Fig. 5

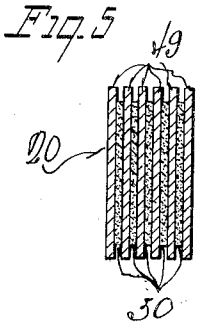

Fig. 2.

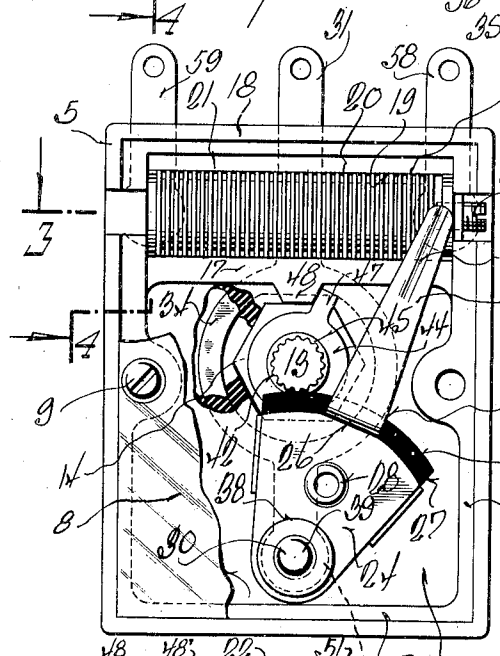

Fig. 3.

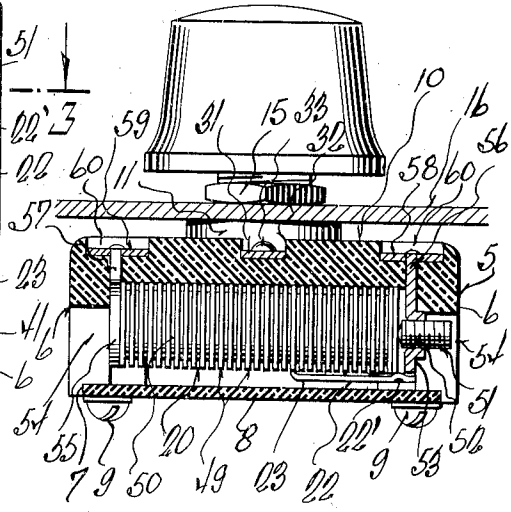

Fig. 9.

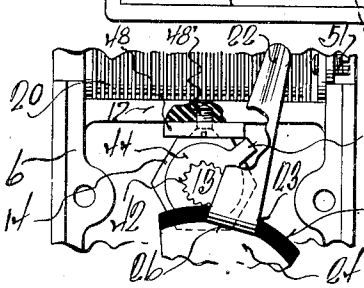

Inventor
George E. Megow
By Dr. Milton Jones
Attorney

Dec. 5, 1933. G. E. MEGOW 1,938,395

RHEOSTAT

Filed Dec. 16, 1929 2 Sheets-Sheet 2

Fig. 6

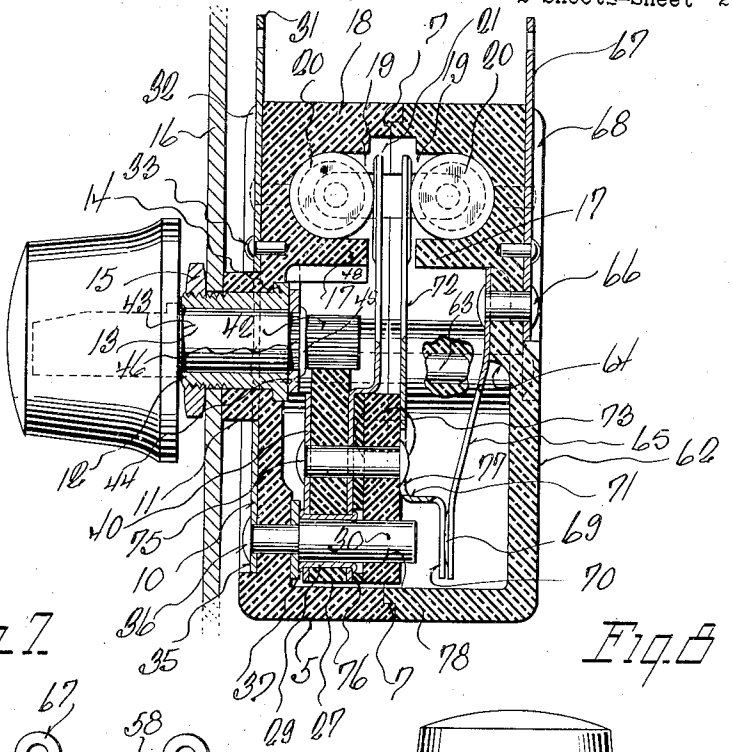

Fig. 7

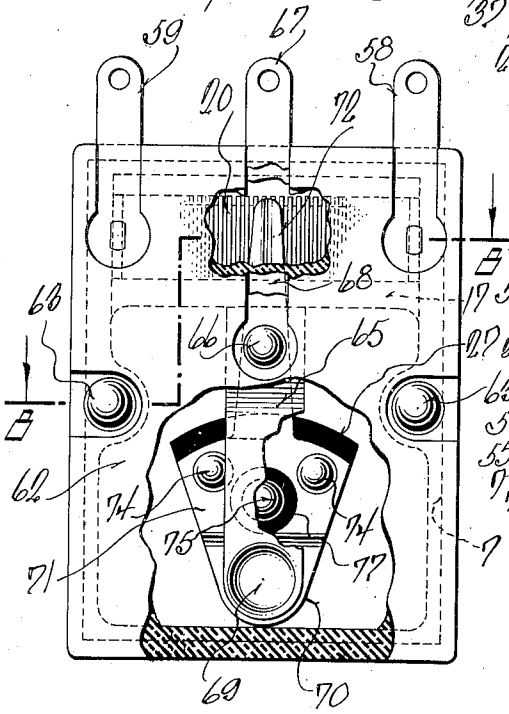

Fig. 8

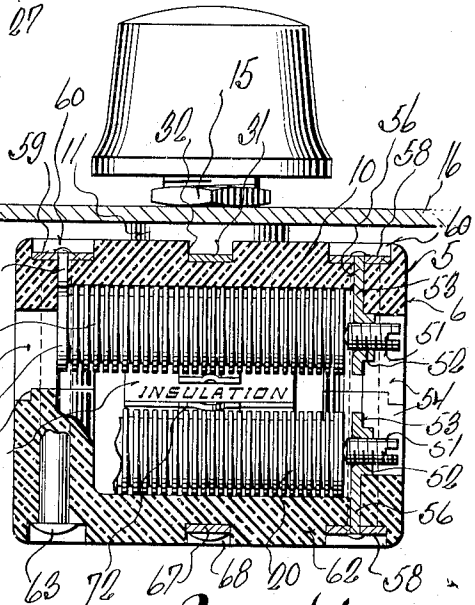

Inventor
George E. Megow
By Hamilton Jones
Attorney

Patented Dec. 5, 1933

1,938,395

UNITED STATES PATENT OFFICE

1,938,395

RHEOSTAT

George E. Megow, South Milwaukee, Wis., assignor, by mesne assignments, to Allen-Bradley Company, Milwaukee, Wis., a corporation of Wisconsin

Application December 16, 1929
Serial No. 414,439

14 Claims. (Cl. 201—55)

This invention relates to certain new and useful improvements in rheostats especially designed for use in radio circuits and refers more particularly to potentiometers.

Great effort has been expended to produce a satisfactory potentiometer for use in radio receivers and particularly as a volume control, but with devices heretofore proposed it has been difficult to obtain the desired range of adjustment and gradual variation of resistance value within the limited degree of movement of the actuating member, or in other words it has been difficult to establish a desired relationship between the movement of the actuating member and the variation in resistance.

It is, therefore, one object of this invention to provide an improved potentiometer wherein the range of resistance value is readily adjustable, and wherein the rate of variation is controllable so that any desired curve representing the relationship between the movement of the actuating member and the variation in resistance value may be obtained.

Another object of this invention resides in the novel manner of imparting the movement of the actuating member to the adjusting element of the potentiometer, wherein the rotation of the actuating member is translated to a radial motion on the part of the adjusting element, so that any desired predetermined degree of rotation of the actuating member causes complete functioning of the potentiometer.

Another object of this invention resides in the provision of an improved potentiometer wherein a contact arm mounted for radial motion sweeps across the edges of parallel circular metal discs forming part of the resistor element per se.

A further object of this invention resides in the provision of an improved resistance element consisting of alternate metal and resistance discs, the metal discs being of greater diameter to provide a series of contact points whereby a comparatively large number of contact points are obtained within a given distance.

A further object of this invention resides in the provision of an improved potentiometer of the character described consisting of a single resistance element of the compressible disc type and a single contactor engageable with the surface thereof to sweep from one end toward the other whereby the resistance of two circuits having sections of the resistor incorporated therein are oppositely variable.

In some instances it is desirable to prevent cutting out all the resistance in the potentiometer circuits and heretofore this has been accomplished by means of separate resistance units incorporated in the potentiometer circuit or circuits, and this invention has as a further object the provision of means substantially integral with the potentiometer resistor element whereby any predetermined degree of resistance may be maintained.

A still further object of this invention resides in the provision of a resistance element wherein resistor discs of different conductive values may be utilized so that the total resistance of the element may be initially adjusted, and the sensitivity of the element, as the contactor approaches either limit of movement, readily controlled to suit any particular situation.

And a still further object of this invention resides in the provision of a potentiometer consisting of two units arranged in tandem and operated by a common member.

With the above and other objects in view which will appear as the description proceeds, my invention resides in the novel construction, combination and arrangement of parts substantially as hereinafter described and more particularly defined by the appended claims, it being understood that such changes in the precise embodiment of the hereindisclosed invention may be made as come within the scope of the claims.

In the accompanying drawings I have illustrated two complete examples of the physical embodiment of my invention constructed according to the best modes I have so far devised for the practical application of the principles thereof, and in which:

Figure 1 is a view, partly in vertical section and partly in elevation, of a potentiometer embodying this invention;

Figure 2 is a view looking at the rear of the potentiometer with parts broken away to illustrate structural details;

Figure 3 is a transverse sectional view taken through Figure 2 on the plane of the line 3—3;

Figure 4 is a fragmentary detail view taken transversely through one end portion of the resistor element and illustrating the manner of connecting the end thereof with a line terminal;

Figure 5 is an enlarged transverse sectional view of a portion of the resistance element to illustrate its construction;

Figure 6 is a view similar to Figure 1 of a modified form of my invention wherein two units are arranged in tandem;

Figure 7 is a view similar to Figure 2 of the tandem arranged structure;

Figure 8 is a transverse sectional view taken through Figure 7 on the plane of the line 8—8; and

Figure 9 is a fragmentary view, with parts in section and parts in elevation, of adjustable means for maintaining a predetermined minimum resistance in the circuit.

Referring now more particularly to the accompanying drawings in which like numerals designate like parts throughout the several views, 5 represents the enclosing body or housing of a potentiometer which is preferably molded or otherwise formed of insulating material with its side walls 6 provided with a marginal off-set or stepped portion 7 to receive a cover 8. The cover, if desired, may be of transparent material and is removably secured over the housing by screws or other fastenings 9.

The bottom wall 10 of the housing has a centrally bored boss 11 having a bushing or sleeve 12 therein which provides a bearing for an operating or drive shaft 13 to be later described. The bushing or sleeve 12 has its inner end provided with a hexagonally shaped flange 14, which engages in a correspondingly shaped counterbore in the inner face of the wall 10 to secure the bushing against rotation, and the outer end thereof extends beyond the boss 11 and is externally threaded to receive a jam nut 15 which serves to mount the potentiometer to a supporting panel or the like 16 in the manner illustrated.

The housing is preferably of rectangular shape and one end thereof has an intermediate wall 17 molded integral therewith and spaced from but parallel with the adjacent end wall 18 to provide a compartment 19 for receiving a resistance element 20 to be later described. The bottom of the compartment 19 is semi-circular to conform to the external peripheral surface of the resistance element, and the wall 17 terminates inwardly of the off-set 7, to, with a space 21 formed by cutting away a portion of the wall 18, accommodate the free end 22 of a movable contactor 23, which is operable to sweep the resistance element and vary the resistance imposed in the circuits (not shown) in which the potentiometer is incorporated.

The contactor 23 is preferably struck from metal such as sheet copper, or the like, and its inner end 24 is of segmental shape and offset, as at 26, with respect to its yieldable contact finger portion 22 so that its free end which engages the resistance element clears the operating mechanism, about to be described.

The segmental portion 24 of the contactor is secured to a segment of insulating material 27 by means of tubular rivets 28 and 29, the rivet 29 providing a bearing for a pivot post or stud 30 centrally mounted in the lower portion of the housing. Through the pivot post or stud 30 the contactor 23 is electrically connected with a terminal member 31 which is secured to the exterior surface of the bottom wall of the housing within a suitable recess or channel 32 therein, by rivets or other means 33.

The terminal member has its medial portion enlarged and apertured to form an annular ring portion 34 to surround the boss 11, and the inner end 35 of the terminal member has an aperture through which the outer end of the pivot post or stud 30 passes and is riveted over, as at 36. The pivot post or stud 30 has its end passing through the wall 10 of the housing 5 of reduced diameter to provide a shoulder which abuts a metal washer 37 engaging the inner surface of the wall 10 and against which the inner end of the hollow rivet 29 rubs, to further insure electrical contact between the terminal 31 and the movable contactor, this electrical contact being further improved by a washer 38 carried by the riveted end 39 of the pivot post or stud and engaging the outer end of the rivet 29. If desired, a segment or plate 40 may be secured to the inner surface of the insulating segment 27 to further insure good electrical contact between the contactor and the terminal 31.

The insulating segment 27 extends beyond the circumference of the segments 24 and 40, as at 41, to provide a driving surface with which the longitudinally serrated end 42 of the drive shaft 13 frictionally engages so that rotation of the shaft 13 imparts a radial motion to the contactor unit, as will be readily apparent.

The drive shaft 13 is held against axial movement in the bearing or bushing 12 by a shoulder 43 on the shaft which engages the outer end of the bushing, and by a washer 44 secured to the shaft inwardly of its serrated end 42, as at 45, the washer being held against rotation on the shaft by serrations or teeth 46. Projected from the washer 44 is a tongue 47 which lies in the path of an abutment 48 extended from the wall 17 to engage the same and limit the rotation of the shaft 13 in either direction to slightly less than a complete turn, which however, is sufficient to carry the contactor from one end of the resistance element to the other.

It will be noted that by merely changing the diameter of the serrated shaft end 42 and correspondingly increasing or decreasing the radius of the segment 27, the ratio between the actuating shaft and the adjusting element per se is readily adjustable, so that any desired degree of movement on the part of the adjusting element may be obtained with a predetermined rotation of the shaft.

The resistor element 20 consists of relatively thin alternate metal and resistor discs 49 and 50, respectively, so that a large number of contact points are obtained with a comparatively small angular motion of the movable contactor, and to insure perfect electrical contact between the element and the contactor, and to preclude the engagement of more than two metal discs at one time, the said discs are of greater diameter than the resistor discs and the contacting end of the contactor has a narrow longitudinal rib 22'.

The resistance value of the element may be set to cover any practical range by forming the individual resistor discs of materials having the desired conductive characteristics, and if a particular resistance curve is desired, the resistance of the succeeding discs may be graduated.

This method of constructing the resistor element enables any desired range to be obtained without increasing or decreasing the physical dimensions of the element as a whole; and to enable the total resistance value of the element to be adjusted so that all devices of the same rating actually have the same resistance values, a compression screw 51 is provided whereby the stack of alternate resistor and metal discs may be placed under any desired degree of compression.

The compression screw 51 is threaded in an opening 52 formed in a plate member 53 at one end of the resistor element, and extends outwardly from the plate member into a suitable

opening 54 formed in the adjacent side wall of the housing. It is noted that both side walls of the housing are provided with openings 54. This enables the resistor element to be assembled from either side, that is, the compression screw 52 may be located at either end of the element without altering the construction of the housing.

The plate member 53 and a second plate member 55 at the other end of the resistor element have their major portions circular and of substantially the same diameter as the metal discs with fingers or lugs 56 and 57, respectively, extending rearwardly therefrom through suitable openings in the wall of the housing, to be connected with terminal members 58 and 59 by having their outermost ends passed through and riveted over the terminal members. Like the terminal member 31 which is electrically connected with the contactor and forms the central terminal of the potentiometer, the terminals 58 and 59 are received within suitable depressions 60 formed in the rear wall of the housing to maintain the same in proper position.

The plate member 55 is flat throughout its entire area and the plate 53 as stated, has a threaded opening to receive the compression screw, the opening being eccentrically located and having its depth increased to provide sufficient bearing surface for the screw by a peripheral flange. Locating the opening 52 eccentrically with respect to the major portion of the plate 53 places the axis of the screw outwardly of the axis of the resistor element, so that as the element is placed in compression there is a tendency to force the medial portion of the resistor element inwardly against the bottom of the compartment 19 to prevent the same from springing or flexing outwardly.

The total resistance value of the element is thus readily adjustable by means of the compression screw, and if desired, further manipulation of the screw after the resistance of the element has been adjusted, may be prevented by sealing the opening 54 in which the screw is received, and if this is done the other opening is preferably left open to provide ventilation for the interior of the housing.

In that form of my invention illustrated in Figures 6, 7 and 8 the general scheme of construction is identical with that hereinbefore described, but in this instance two resistor elements and two contact arms are arranged in tandem to be controlled from a single actuating member. The housing 5 is of the same construction as described except that in place of the cover 8 a second housing 62 similar to the housing 5 has its peripheral edges engaged with the stepped portion 7, so that substantially a continuous casing is obtained, the housings being held together by rivets 63.

The housing 62 like the housing 5 has a chamber or compartment 19 for the reception of a duplicate resistor element 20. A boss 64 is formed on the surface of its inner wall, to which a spring finger 65 is secured by a rivet 66 which also passes through a terminal 67 received in a suitable depression 68.

The lower free end of the spring finger 65 is pressed outwardly, as at 69, and engaged with the offset end 70 of the inner segmental portion 71 of a contactor arm 72 which is arranged to sweep across the second resistor element in the housing 62. The contactor arm 72 is secured to a segment 73 formed of insulating material and smaller than the segment 27 to be received beneath the offset portion 26 of the contactor 23.

The segmental portion of the contactor 72 is secured to the segment 73 by rivets 74 and the assembled contactor arm 72 and segment 73 is securely connected with the segmental portion of the contactor 23 by a central rivet 75 which takes the place of the rivet 28. A thin piece of insulating material 76 is disposed between the segment 73 and the segmental portion 24 of the contactor 23 to maintain the rivets 74 and the said segmental portion 24 out of electrical engagement, and to maintain the rivet 75 which is electrically connected with the plate 40 of the contactor 23 from electrical engagement with the contactor 72, the segmental portion of the contactor 72 is provided with an enlarged aperture 77 to receive the adjacent head of the rivet without touching the same.

The stud 30 which extends through the rivet bearing 29 of the contactor 23 instead of being riveted over the outer end of the bearing is extended and passed through an aligned aperture 78 in the segment 73. In this manner both the contactors 72 and 23 are mounted for radial movement about the axis of the stud 30 and inasmuch as the point of contact between the end 69 of the finger 65 and the offset portion 70 of the contactor 72 is in axial alignment with the axis of the shaft 30 it will be seen that as the contactors are moved about the shaft 30, electrical contact between the contactor 72 and the finger 65 will at all times be maintained without in any way interfering with the electrical operation of the potentiometer structure mounted within the housing 5.

The end terminals of the resistor element mounted in the housing 62 and their manner of connection with the element are identical with those of the modification illustrated in Figures 1 to 5, inclusive. The compression screw method of adjusting the total resistance value of the elements is also maintained in the tandem arrangement.

If desired, the housing 5 may be formed of material having a greater coefficient of expansion than the element, so that heating of the element in use reduces the pressure on the element and consequently lowers its overall resistance value, or the coefficient of expansion of the resistance element can be greater than the housing to operate conversely, as the case may require.

Sometimes it is desired to maintain a minimum resistance in a potentiometer circuit, and in Figure 9 is illustrated a device whereby the limit of travel of the contactor 22 may be adjustably set. In this form, the discs 50 outwardly of the limit of travel of the contactor are preferably of high resistance value in comparison to the other discs 50, and the abutment 48 is of a width to stop the contactor 22 at the desired point from the end of the element. If desired the abutment 48 may be secured in position by a screw 48' so that different size abutments may be utilized for any desired situation.

From the foregoing description taken in connection with the accompanying drawings it will be readily apparent to those skilled in the art to which an invention of this character appertains that I provide a novel potentiometer structure which without change of physical dimensions is adaptable to an exceptionally wide range of adjustment, one in which any desired relationship between the actuating member and the variation of resistance may be obtained in an extremely

simple and practical manner, and one in which the points of contact are in a straight line due to the radius of the contact discs.

What I claim as my invention is:

1. In a rheostat, a resistor comprising a stack of discs, a supporting trough having a longitudinally extending opening as wide as the diameter of said discs, said discs being maintained in stacked relation by the trough with a side portion of the stack exposed, retaining means to hold the stack of discs in the trough, said retaining means being readily releasable and the discs being flat throughout, whereby any disc or number of discs is removable and insertable edgewise from and into the trough, and a contactor arranged to wipe across the exposed side portion of the stack of discs.

2. In a device of the character described, a housing having a trough-like depression forming a compartment, a resistor element mounted within said compartment, and comprising alternate metal and resistor discs in stacked relation, end plates for the resistor element engaging the ends of the compartment, terminals electrically connected with the end plates, and a compression screw threaded in one of said end plates for placing the stack of discs in compression, the axis of said compression screw being outwardly of the axis of the resistor element whereby the compression of the element by the screw tends to urge its medial portion rearwardly to prevent its displacement from the compartment.

3. In a device of the character described, a member provided with a trough, a resistor element received in said trough and comprising stacked independent elements, and a compression screw adapted to place the resistor element in compression, said screw engaging one end of the resistor unit outwardly of its longitudinal axis to tend to bow the medial portion of the element inwardly toward the bottom of the trough and prevent its displacement from the trough.

4. In a device of the character described, a housing provided with a trough, a resistor element mounted in the trough and comprising stacked discs, and a compression screw adapted to place the stack of discs in compression, said screw engaging the resistor element at a point eccentric to its longitudinal axis to bow the medial portion of the resistor element inwardly toward the bottom of the trough and retain the resistor element therein.

5. In a device of the character described, the combination of an enclosing housing having a trough-like depression extending transversely across one end thereof, a resistor element comprising a plurality of stacked discs disposed in said transversely extending depression and maintained in axial alignment by the walls of said depression, a contact arm, means mounting the contact arm for swinging motion about an axis adjacent the opposite end of the housing and with its free end portion arranged to wipe across the side of the resistor element with a straight line contact, a sector connected with said contact arm to be movable about the axis of its mounting, the arcuate edge of said sector being concentric with said mounting means and being disposed between said mounting means and the resistor element, and a pinion journalled in the housing medial portion for driving engagement with the arcuate edge of the sector.

6. In a device of the character described, the combination of a housing open at one side, a transverse wall extending across the housing to divide its interior into spaced compartments, a resistor element comprising a plurality of stacked discs received in one of said compartments and maintained in axial alignment by the walls of the compartment, a contact arm, means within the other compartment mounting one end of the contact arm for swinging movement about an axis adjacent the end of the housing remote from the resistor element and with its free end portion projected over the transverse wall for wiping engagement with the side of the resistor element, a sector connected with the contact arm and disposed wholly within said other compartment with its arcuate edge concentric to the axis about which the contact arm swings, and a drive pinion within said second mentioned compartment and adjacent the transverse wall adapted for driving engagement with the arcuate edge of the sector.

7. In a device of the character described, the combination of an enclosing housing, a transverse wall adjacent one end of the housing to divide the interior of the housing into spaced compartments, a resistor element comprising a stack of discs disposed in one of said compartments, the discs of the resistor element engaging the walls of the compartment in which they are received to be thereby maintained in axial alignment with their peripheries extending outwardly of the plane of the dividing wall outer edge, a contact arm having its major portion received within the other compartment, means mounting one end of the contact arm for movement about an axis adjacent the end of the housing remote from the resistor element, the free end portion of the contact arm extending across the dividing wall to have a wiping engagement with the side of the resistor element, a sector connected with the contact arm and journalled on the contact arm mounting means with its arcuate edge concentric to the axis of said mounting means, and a drive pinion journalled in the medial portion of the enclosing housing and projecting into said second mentioned compartment for driving engagement with the arcuate edge of the sector, said sector and driving pinion occupying a plane substantially common to the longitudinal axis of the resistor element.

8. In a device of the character described, the combination of a plurality of enclosing housings each having transversely extending depressions at adjacent ends, the enclosing housings being in abutting relation with their transversely extending depressions substantially in a common plane, resistor elements each comprising a series of stacked discs disposed in said transversely extending depressions with their adjacent sides in parallel spaced relation, movable contactors, means mounting the movable contactors for movement about a common axis adjacent the end of the enclosing housing remote from the resistor elements with the free end portions of the movable contactors arranged for sliding electrical engagement with the external surfaces of the resistor elements, a segment connected with the movable contactors to be movable about the axis of their mounting means and with the arcuate edge thereof concentric to the axis of said mounting means and between said mounting means and the resistor element, and a drive pinion projected into the interior of one of the enclosing housings and adapted for driving engagement with said arcuate edge of the sector to simultaneously actuate the movable contacts across the length of the resistor elements.

9. In a device of the character described, the

combination of a housing member having a trough-like depression adjacent one end, a compressible pile electrical resistor disposed in said trough-like depression, means associated with the housing and engageable with the electrical resistor to impose pressure on said resistor and maintain a normal predetermined overall resistance therein, a movable contactor mounted for swinging movement about an axis adjacent the housing end remote from the resistor element, means carried by the housing and adapted to actuate the movable contactor about its pivotal mounting to wipe its free end portion across the exterior of the resistor element and select the desired amount of resistance to be interposed in a circuit in which the device is included, said resistor element heating during use, and the enclosing housing being formed of material having a relatively high temperature co-efficient of expansion in comparison with that of the resistor element whereby the pressure on the element is decreased as the element heats up.

10. In a rheostat, an adjustable resistor comprising, a stack of discs, a supporting trough having a longitudinally extending opening as wide as the diameter of the discs, said discs being maintained in stacked relation by the trough, with a side portion of the stack exposed, common means to hold the stack of discs in the trough and to adjust the overall resistance of the resistor, said common means being readily releasable and the discs being flat throughout, whereby any disc or number of discs is removable and insertable edgewise from and into the trough, and a contactor arranged to wipe across the exposed side portion of the stack of discs.

11. In a device of the character described, a base provided with a straight resistor supporting trough, a resistor unit in said trough and having a side portion projected beyond one wall of the trough, said resistor unit comprising a plurality of individual flat elements individually insertable and removable from the trough without necessitating displacement of the other element retained in stacked relation by the trough, a wall at each end of the trough, means engaged with one wall and the adjacent end of the resistor unit to adjustably compress the stack of elements and adjust the overall resistance of the unit, and a contactor pivotally mounted from the base with its free end portion extended across the aforementioned wall of the trough to traverse the projected side portion of the unit in electrical straight line contact upon movement of the contactor about its pivotal mounting.

12. In a device of the character described, a base provided with a straight resistor supporting trough, a resistor unit in said trough and comprising a plurality of independent discs of a diameter greater than the depth of the trough whereby one side portion of the unit projects beyond the walls of the trough, all of said discs being flat throughout so as to be individually insertable and removable edgewise without disturbing other discs, a fixed wall at each end of the trough, means engaged with one of said fixed walls and the adjacent end of the resistor unit to adjustably compress the stack of discs and adjust the overall resistance of the unit, a contactor pivotally mounted from the base at a point spaced from the unit to have its free end portion extended across one wall of the trough and into engagement with the projected side portion of the unit, and rotatable means for swinging the contactor about its pivotal mounting.

13. A device of the character described, comprising a housing having one side entirely open, a wall extending transversely across the housing in parallel spaced relation to one end wall of the housing to co-act therewith and define an open trough, a compressible resistor unit mounted in said trough with one side portion projected above the open top of the trough, means at one end of the trough for adjusting the pressure on the unit, a contactor pivotally mounted within the housing at a point spaced from the resistor unit with its free end portion extended across said transverse wall to traverse the length of the unit in straight line contact with its projected side portion, and a cover closing the open side of the housing to completely encase the resistor unit and contactor.

14. In a device of the character described, the combination of a housing having a transverse wall dividing its interior into spaced compartments, a resistance element comprising a plurality of stacked discs received in one of said compartments and maintained in axial alignment by the walls of said compartment, a contact arm, means within the other compartment mounting one end of the contact arm for swinging movement about an axis adjacent the end of the housing remote from the resistance element and with its free end portion projected over the transverse wall for wiping engagement with the side of the resistance element, a part connected with the contact arm and disposed wholly within said other compartment and having an arcuate portion concentric to the axis about which the contact arm swings, and a drive pinion within said second mentioned compartment adapted for driving engagement with the arcuate portion of said part.

GEORGE E. MEGOW.