OPIC
Office de la propriété intellectuelle du Canada

CIPO
Canadian Intellectual Property Office

(12) (19) (CA) **Demande-Application**

(21) (A1) **2,281,813**
(86) 1998/02/18
(87) 1998/08/20

(72) CURLEY, JOHN J., JR., US
(71) CURLEY, JOHN J., JR., US

(51) Int.Cl.[6] A43C 15/16, A43B 13/26
(30) 1997/02/18 (08/800,580) US

(54) **CRAMPON POUR CHAUSSURES**

(54) **FOOTWEAR CLEAT**

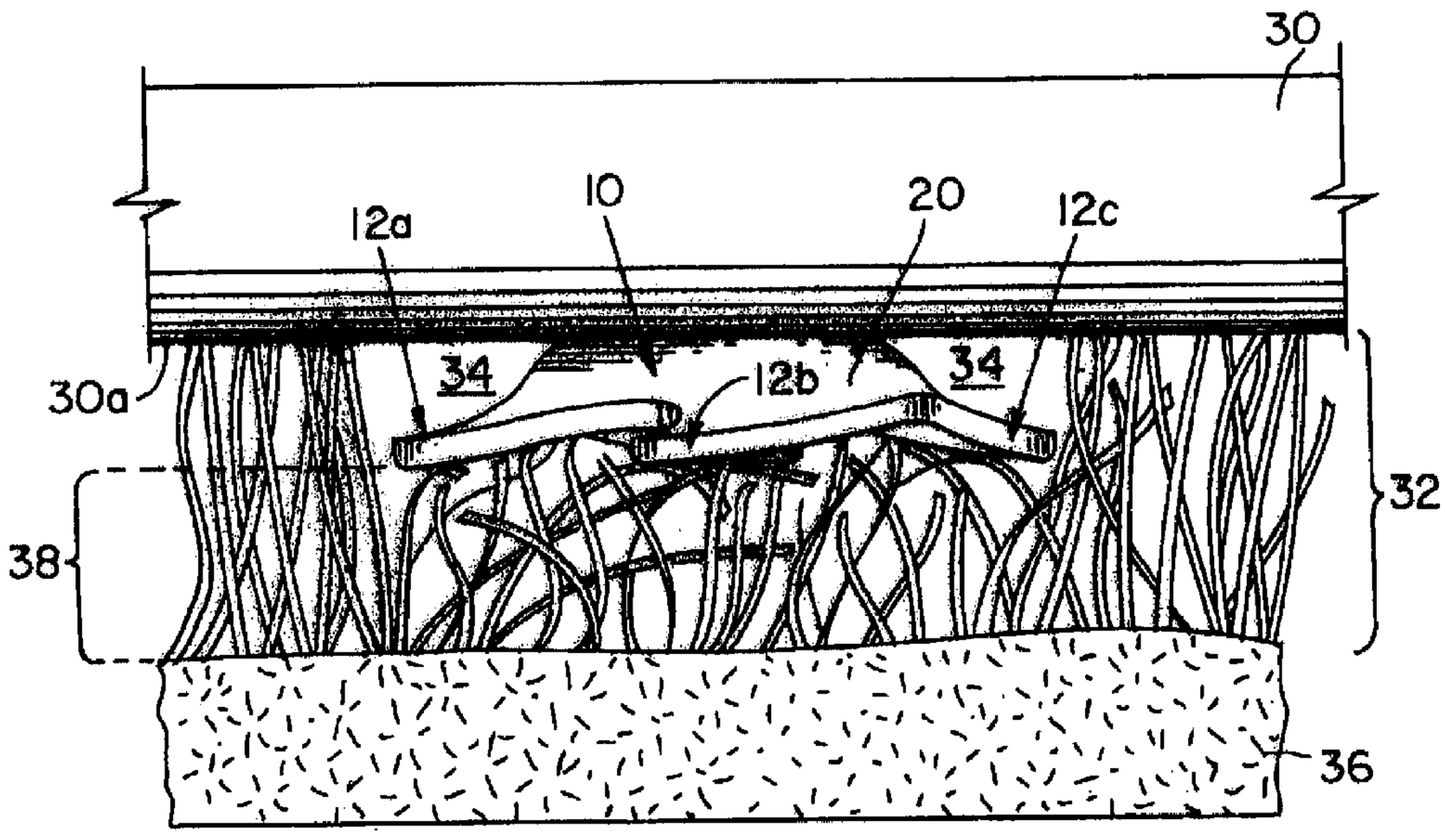

(57) L'invention concerne un crampon en plastique flexible pour chaussures, comportant une partie centrale et une série de saillies résilientes se trouvant en porte-à-faux par rapport à la partie centrale, qui s'étendent à partir de celle-ci radialement vers l'extérieur, et au-delà de celle-ci vers le bas. Les saillies sont susceptibles de venir en prise horizontalement avec le gazon sous la chaussure afin d'assurer une course sûre.

(57) A footwear cleat of flexible plastic includes a central hub portion and a series of resilient protrusions cantilevered from and extending radially outward and downwardly beyond the central hub portion. The protrusions are capable of horizontally engaging turf under the footwear for providing secure footing.

PCT

WORLD INTELLECTUAL PROPERTY ORGANIZATION
International Bureau

INTERNATIONAL APPLICATION PUBLISHED UNDER THE PATENT COOPERATION TREATY (PCT)

(51) International Patent Classification 6 :
A43C 15/16, A43B 13/26

A1

(11) International Publication Number: WO 98/35575

(43) International Publication Date: 20 August 1998 (20.08.98)

(21) International Application Number: PCT/US98/03048

(22) International Filing Date: 18 February 1998 (18.02.98)

(30) Priority Data:
08/800,580 18 February 1997 (18.02.97) US

(63) Related by Continuation (CON) or Continuation-in-Part (CIP) to Earlier Application
US 08/800,580 (CIP)
Filed on 18 February 1997 (18.02.97)

(71)(72) Applicant and Inventor: CURLEY, John, J., Jr. [US/US]; 70 Scribner Road, Tyngsboro, MA 01879 (US).

(74) Agents: REYNOLDS, Leo, R. et al.; Hamilton, Brook, Smith & Reynolds, P.C., Two Militia Drive, Lexington, MA 02173 (US).

(81) Designated States: AL, AM, AT, AU, AZ, BA, BB, BG, BR, BY, CA, CH, CN, CU, CZ, DE, DK, EE, ES, FI, GB, GE, GH, GM, GW, HU, ID, IL, IS, JP, KE, KG, KP, KR, KZ, LC, LK, LR, LS, LT, LU, LV, MD, MG, MK, MN, MW, MX, NO, NZ, PL, PT, RO, RU, SD, SE, SG, SI, SK, SL, TJ, TM, TR, TT, UA, UG, US, UZ, VN, YU, ZW, ARIPO patent (GH, GM, KE, LS, MW, SD, SZ, UG, ZW), Eurasian patent (AM, AZ, BY, KG, KZ, MD, RU, TJ, TM), European patent (AT, BE, CH, DE, DK, ES, FI, FR, GB, GR, IE, IT, LU, MC, NL, PT, SE), OAPI patent (BF, BJ, CF, CG, CI, CM, GA, GN, ML, MR, NE, SN, TD, TG).

Published

With international search report.
Before the expiration of the time limit for amending the claims and to be republished in the event of the receipt of amendments.

(54) Title: FOOTWEAR CLEAT

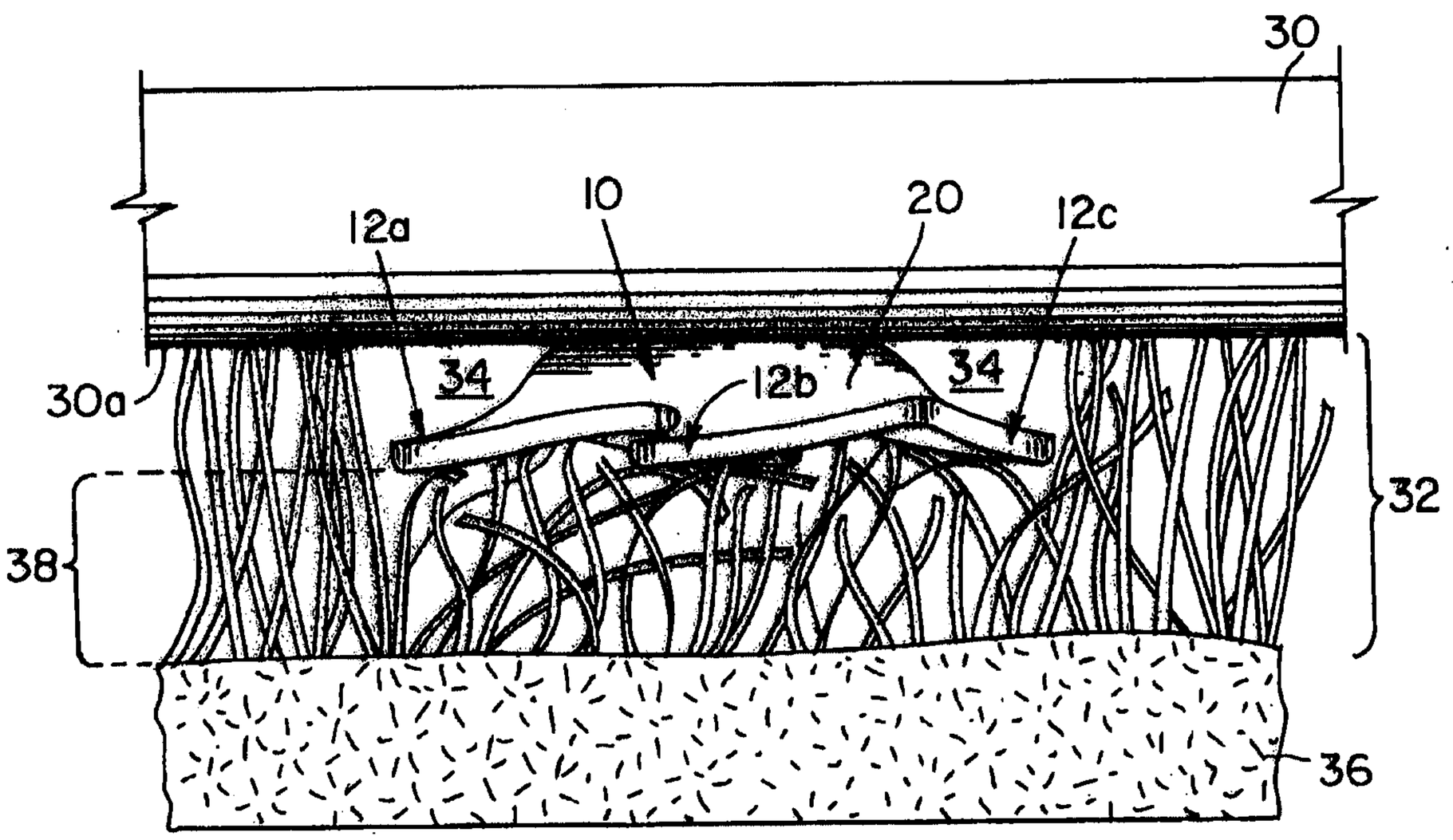

(57) Abstract

A footwear cleat of flexible plastic includes a central hub portion and a series of resilient protrusions cantilevered from and extending radially outward and downwardly beyond the central hub portion. The protrusions are capable of horizontally engaging turf under the footwear for providing secure footing.

TMZ9701A.PCT

FOOTWEAR CLEAT

BACKGROUND OF THE INVENTION

Athletic shoes for use in sporting activities often employ spikes protruding from the soles of the shoes for better traction. Referring tc FIG. 1, golf shoes such as shoe 60 traditionally have a series of individual spikes 62 protruding from the sole 60a which extend downwardly about 8 mm from respective base flanges 64 mounted to the sole 60a. Spikes 62 are long enough to penetrate into the soil 36 to provide traction. Recently, golf courses have begun to prohibit the use of these traditional golf spikes due to the damage they cause to the turf, particularly to golf course greens.

The response of golf spike manufacturers to the prohibition of traditional spikes is to position a series of small protrusions 66 approximately 2 mm high in a circular pattern on a traditional spike base flange 64 as seen in FIG. 2. A drawback of this approach is that little ground engaging ability is provided particularly on wet surfaces resulting in sub-standard support and protection for the golfer. In another approach, GB-A-2298563 discloses a golf cleat having a circular flange with a series of traction ribs formed on the bottom surface of the flange. The traction ribs are arranged in a radial fashion and extend from the center of the flange.

AMENDED SHEET

SUMMARY OF THE INVENTION

The present invention is directed to cleats for footwear such as golf shoes which provide support similar to traditional spikes while at the same time do not damage turf such as golf course greens. The present invention footwear cleat includes a central hub portion and a series of protrusions or projections cantilevered from and extending radially outward from the hub portion for engaging turf.

In preferred embodiments, the protrusions also extend slightly downwardly beyond the hub portion. When the cleat is secured to a footwear sole, the protrusions are spaced away from the footwear sole. The cleat is formed from flexible plastic so that the protrusions are resilient and are capable of deflecting upwardly. The protrusions are curved with a first convex edge and a second concave edge and the second edge is preferably shorter than the first edge. A threaded portion extends from the central hub portion for securing the cleat to footwear.

While traditional spikes are designed to penetrate the lower layers of turf, the cleat of the present invention is not adapted to provide traction between the footwear and the turf by penetrating the lower layers of turf. Should a user of the present cleat invention cleat start to slip in any direction on a fairway or in a rough area with a hilly surface, the protrusions snare strands of turf above the soil, trapping some grass in the area between the protrusions and the sole of the footwear. However, when walking on a relatively flat, firm surface such as golf greens, the weight of the user causes the protrusions to deflect or fold upwardly retracting the protrusions from engagement with the turf. This renders the cleats dormant and prevents damage to surfaces such as golf greens. Most golf greens are relatively flat surfaces so that traction is generally not needed and there is little chance of slipping while walking without traction. An additional benefit of the present cleat invention is that footwear including the cleats can be worn indoors without damaging the flooring due to the soft plastic material of the cleats and the fact that the cleat protrusions become inactivated or detented when pressed upon the flooring.

BRIEF DESCRIPTION OF THE DRAWINGS

FIG. 1 is a side view of a traditional prior art metal spike in a section of dense short turf such as a golf green.

FIG. 2 is a side view of a prior art spike consisting of a series of small protrusions in a section of dense short turf.

FIG. 3 is a bottom view of a golf shoe including the present invention cleats.

FIG. 4 is a bottom view of the present invention cleat.

FIG. 5 is a side view of the present invention cleat.

FIG. 6 is a side sectional view of the present invention cleat.

FIG. 7 is a side view of the present invention cleat on the bottom of a shoe positioned over a section of turf.

FIG. 8 is a side view of the cleat within the section of turf.

FIG. 9 is a side view of the cleat with the turf engaging protrusions engaging the section of turf.

FIG. 10 is a side view of the cleat with the turf engaging protrusions in the compressed position on a section of dense short turf such as a golf green.

FIG. 11 is a bottom view of another preferred cleat.

FIG. 12 is a bottom view of still another preferred cleat.

FIG. 13 is a bottom view of yet another preferred cleat.

FIG. 14 is a bottom view of still another preferred cleat.

FIG. 15 is a side sectional view of the cleat shown in FIG. 14.

DESCRIPTION OF PREFERRED EMBODIMENTS

Referring to FIGs. 3, 4, 5 and 6 golf shoe 30 includes a series of the present invention cleats 10 mounted to the sole 30a of golf shoe 30. Each cleat 10 includes a resilient portion having a plurality of turf engaging protrusions 12a, 12b, 12c and 12d extending radially outwardly and curving downwardly beyond a central hub portion 20. Each turf engaging element 12a, 12b, 12c and 12d has a respective first curved convex edge 16a, 16b, 16c and 16d as well as a respective second curved concave edge 14a, 14b, 14c and 14d formed between adjacent tips 18a, 18b, 18c and 18d. The curved convex edges 16a, 16b, 16c and 16d are longer than the curved concave edges 14a, 14b, 14c and 14d. This results in tips 18a, 18b, 18c, and 18d spiraling outward from and beyond central hub portion 20. Preferably, the curved convex edges 16a, 16b, 16c and 16d are more than 3 times longer than the curved concave edges 14a, 14b, 14c and 14d. The turf engaging protrusions 12a, 12b, 12c and 12d are cantilevered from central hub portion 20. The downward curve of turf engaging protrusions 12a, 12b, 12c and 12d begins to curve outwardly near tips 18a, 18b, 18c and 18d such that the tips are substantially flat, horizontal and parallel to sole 30a. A circular gap 34 is formed around the circumference of central hub portion 20 between sole 30a and turf engaging protrusions 12a, 12b, 12c and 12d (FIG. 7) due to the radially outward and downward extension of the turf engaging protrusions 12a, 12b, 12c and 12d from central hub portion 20.

Cleat 10 is preferably molded from a pliable soft plastic material such as 40 durometer thermal plastic urethane so that turf engaging protrusions 12a, 12b, 12c, and 12d are flexible. For example, as seen in FIG. 4, turf engaging protrusions 12a and 12c are flexible along arcs

19' and 19 respectively. This allows turf engaging protrusions 12a, 12b, 12c and 12d to fold or deflect upwardly or downwardly. The turf engaging protrusions 12a, 12b, 12c and 12d fold upwardly when sufficient weight or vertical pressure is applied onto cleats 10 as the user is walking on a relatively flat firm surface such as a golf green. The flexibility of the turf engaging protrusions 12a, 12b, 12c and 12d can be controlled by material selection. For example, softer materials resulting in more flexible protrusions 12a, 12b, 12c and 12d can be employed for cleats 10 for users that are light in weight such as children.

The central hub portion 20 of each cleat 10 has a threaded portion 24 for attaching cleat 10 to a corresponding mating threaded hole in sole 30a. A cross-shaped hole 22 is formed in central hub portion 20 and extends upwardly into the core of threaded portion 24. The cross-shaped hole 22 accepts a phillips head screwdriver for tightening cleat 10 to sole 30a.

FIGs. 7, 8 and 9 depict the operation of a single cleat 10 when a user wearing golf shoes 30 walks over a turf region 32 such as a fairway. In FIG. 7, at the beginning of a step, golf shoe 30 and cleat 10 are suspended over turf 32 and soil 36. Turf engaging protrusions 12a, 12b, 12c and 12d of cleat 10 are oriented as originally molded.

In FIG. 8, golf shoe 30 is set down on turf 32 and soil 36. An area of turf 38 is compacted underneath cleat 10. On a typical fairway, the turf 32 has a high loft and turf engaging protrusions 12a, 12b, 12c, and 12d remain in their molded position. Cleat 10 does not engage or damage the turf 32 or soil 36. The circular gap 34 remains open as the vertical pressure against the compacted turf 38 is

not sufficient to fold or deflect the turf engaging protrusions 12a, 12b, 12c and 12d upwardly.

Referring to FIG. 9, when golf shoe 30 and cleat 10 laterally slip along the turf in the direction of arrow 27 (FIG. 4), turf engaging protrusions 12a and 12b become tangled in the upper layers of turf 32 and fold or deflect downwardly causing golf shoe 30 to stop slipping in the direction of arrow 27. Circular gap 34 fills with turf further forcing turf engaging protrusions 12a and 12b downwardly. Turf engaging protrusion 12d (not visible), tends not to tangle within the turf because the attacking edge is the convex edge 16d against which the turf slides. As a result, turf engaging protrusion 12d tends to fold upwardly into circular gap 34. Turf engaging element 12c also tends to fold upwardly into circular gap 34.

The longer convex edges 16a, 16b, 16c and 16d in combination with the shorter concave edges 14a, 14b, 14c and 14d facilitates self tightening of cleat 10 during use. Arrow 26 (FIG. 4) designates the direction in which cleat 10 is screwed into sole 30a. Should cleat 10 laterally slip in the direction of arrow 27, resistance by the turf would be applied equally from a direction indicated by arrows 28, 28' and 28". The upper layers of the turf grabs the short concave surface of edge 14a on turf engaging protrusion 12a. At the same time the turf slides around the long convex edge 16c of turf engaging protrusion 12c such that turf engaging protrusion 12c is not grabbed with as much force as turf engaging protrusion 12a. This means that the net result of the applied forces tightens cleat 10 in the direction of arrow 26 rather than loosening the cleat 10.

FIG. 10 depicts the operation of cleat 10 when walking on a section of dense short turf 40 such as a golf green.

A region of turf 42 under cleat 10 is compacted by vertical pressure of cleat 10. Turf engaging protrusions 12a, 12b, 12c and 12d are folded or deflected upwardly by the relatively firm surface of the golf green and do not engage turf 40, thereby preventing damage to the golf green. The turf engaging protrusions also fold upwardly when walking on solid surfaces such as on asphalt or indoor flooring and will not damage such surfaces.

FIG. 11 depicts another preferred cleat 50 which differs from cleat 10 in that cleat 50 includes a slot 52 for tightening cleat 50 onto the sole 30a of shoe golf 30 with a screw driver. Slot 52 can be made large enough to be tightened with the edge of a coin such as a dime.

FIG. 12 depicts still another preferred cleat 54 which differs from cleat 10 in that cleat 54 includes two holes 56 for tightening cleat 54 onto sole 30a of golf shoe 30. A tool having two protrusions mating with holes 56 is used for tightening cleat 54.

FIG. 13 depicts yet another preferred cleat 70 which differs from cleat 10 in that engaging protrusions 72a, 72b, 72c, and 72d are wider and extend from hub portion 20 substantially perpendicular to each other. In addition, cleat 70 includes a triangular hole 74 for tightening cleat 70 with a triangular shaped tool.

FIGs. 14 and 15 depict another preferred cleat 76 which differs from cleat 10 in that turf engaging protrusions 78a, 78b, 78c and 78d have parallel edges 82 and flat tips 80 so that the turf engaging protrusions 78a, 78b, 78c and 78d extend outwardly and downwardly beyond the hub in a relatively straight manner instead of spiraling outwardly. In addition, cleat 76 includes a hexagonal hole 79 for tightening cleat 76 with a hexagonal wrench.

EQUIVALENTS

While this invention has been particularly shown and described with references to preferred embodiments thereof, it will be understood by those skilled in the art that various changes in form and details may be made therein without departing from the spirit and scope of the invention as defined by the appended claims. For example, holes having other suitable shapes such as square holes or star-shaped holes can be formed in the present invention cleats for accommodating other common types of driving tools. In addition, although the present invention cleats have been described for providing traction for golf shoes, alternatively, the use of the cleats is not limited to golf shoes but can be employed for other suitable purposes such as soccer or football as well as surfaces other than grass. Furthermore, although each preferred cleat has been depicted with four protrusions, alternatively, more than four or less than four protrusions can be employed.

CLAIMS

What is claimed is:

1. A footwear cleat (10) for securing to a footwear sole (30a) for use on turf (32) having lower and upper layers comprising:

a central hub portion (20); and characterized by

a resilient portion extending radially outward and downward from and beyond the hub portion until terminating in substantially flat tips (12a-12d), the tips extending outwardly and substantially parallel to the footwear sole so as not to engage and damage the turf as the footwear sole is presented to the turf, the tips deflecting upwardly to further avoid damage to the turf when traction is not needed, connecting edges (14a-14d, 16a-16d) being formed between adjacent tips, the tips defelecting downward so that the connecting edges and tips engage the upper layers of the turf when the cleat moves laterally within the turf.

2. The cleat of Claim 1 in which the tips (12a-12d) are curved.

3. The cleat of Claim 2 in which each tip (12a-12d) has a first edge (16a-16d) and second edge (14a-14d), the second edge being shorter than the first edge.

AMENDED SHEET

4. The cleat of Claim 3 in which the first edge (16a-16d) has a convex curve and the second edge (14a-14d) has a concave curve.

5. The cleat of Claim 1 in which the cleat (10) is formed from flexible plastic.

6. The cleat of Claim 1 further comprising a threaded portion (24) extending from the central hub portion (20) for securing the cleat (10) to footwear.

7. The cleat of Claim 1 in which the tips (12a-12d) are spaced away from the footwear sole (30a) when secured thereon.

8. The cleat of Claim 1 in which the cleat (10) is of integral construction.

9. A method of forming a footwear cleat (10) for securing to a footwear sole (30a) for use on turf (32) having lower and upper layers comprising the steps of:

molding a central hub portion (20); and the method characterized by

molding a resilient portion radially outward and downward from and beyond the hub portion until terminating in substantially flat tips (12a-12d), the tips extending outwardly and substantially parallel to the footwear sole so as not to engage and damage the turf as the footwear sole is presented to the turf, the tips deflecting upwardly

AMENDED SHEET

TMZ97-01A

to further avoid damage to the turf when traction is not needed, connecting edges (14a-14d, 16a-16d) being formed between adjacent tips, the tips deflecting downward so that the connecting edges and tips engage the upper layers of the turf when the cleat moves laterally within the turf.

10. The method of Claim 9 further comprising the step of curving the tips (12a-12d) such that each tip has a convex first edge (16a-16d) and a concave second edge (14a-14d), the second edge being shorter than the first edge.

11. The method of Claim 10 further comprising the step of forming the tips (12a-12d) from flexible plastic such that the tips are capable of deflecting upwardly.

12. A method of providing secure footing for footwear (30) with a cleat (10) when on turf (32) having lower and upper layers, the footwear having a bottom (30a), the cleat having a central hub portion (20) secured to the bottom of the footwear and a resilient portion extending radially outward and downward from and beyond the hub portion until terminating in substantially flat tips (12a-12d), the tips extending outwardly and substantially parallel to the footwear bottom, connecting edges (14a-14d, 16a-16d) being formed between adjacent tips, the method comprising the step of horizontally engaging the upper layers of the turf

AMENDED SHEET

TMZ97-01A

under the footwear with the tips and connecting edges for preventing the footwear from slipping, the tips deflecting downward when the cleat moves laterally within the turf.

13. The method of Claim 12 further comprising the step of trapping turf (32) between the bottom (30a) of the footwear (30) and the tips (12a-12d).

14. The method of Claim 12 in which the step of horizontally engaging turf (32) comprises snaring grass strands with the tips (12a-12d).

AMENDED SHEET

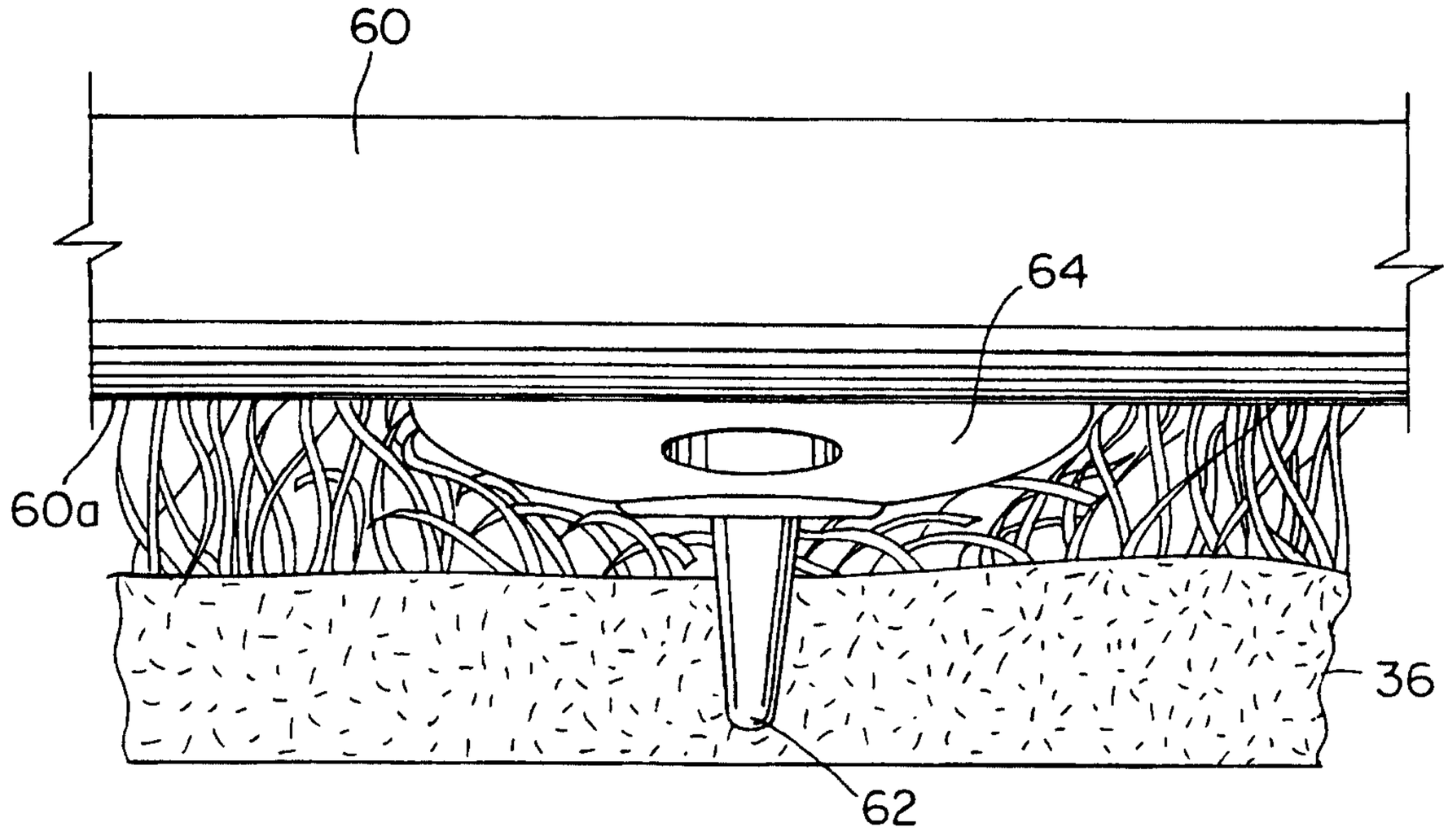

FIG. 1
PRIOR ART

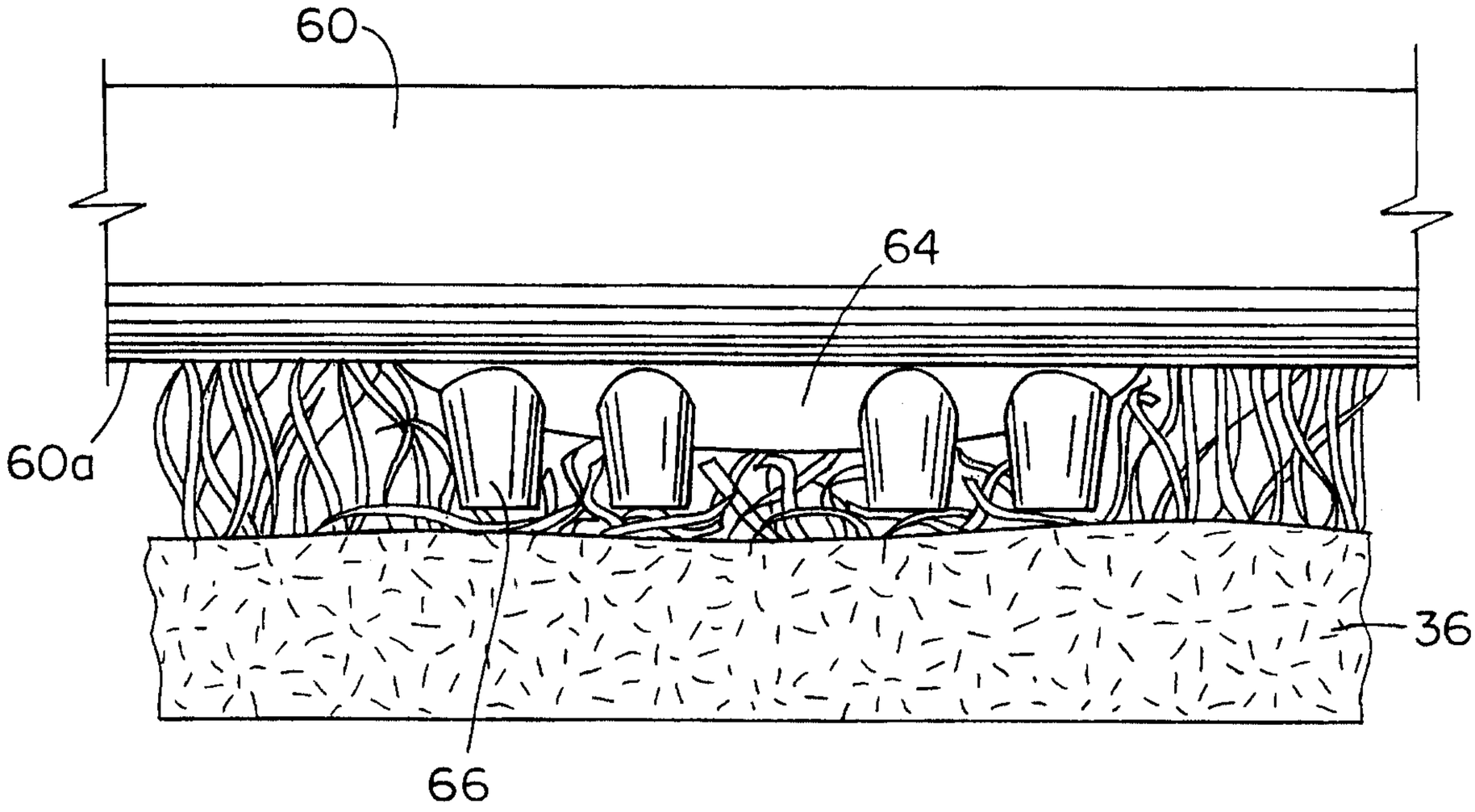

FIG. 2
PRIOR ART

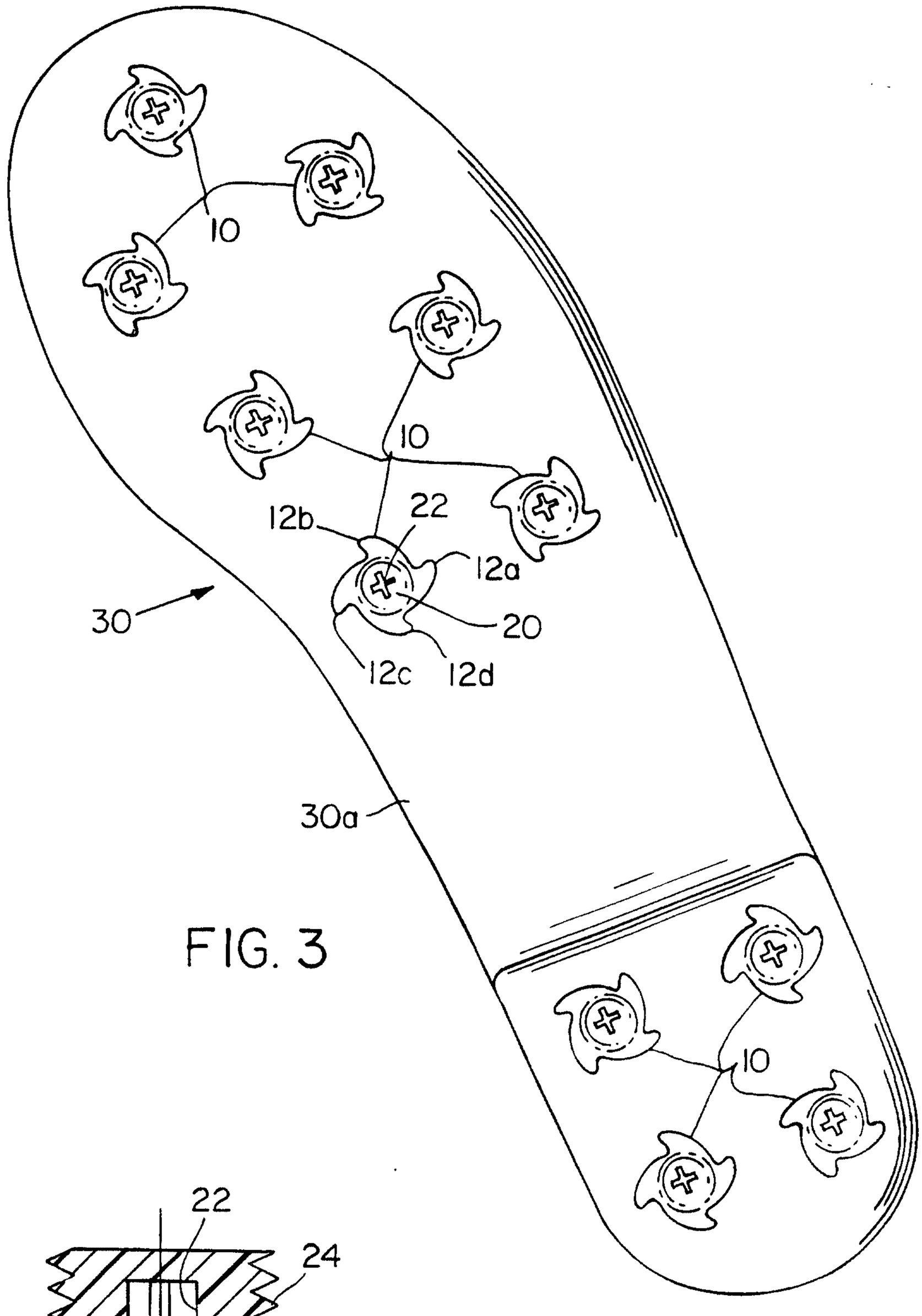
10
10
12b
22
12a
20
30
12c
12d
30a
10

FIG. 3

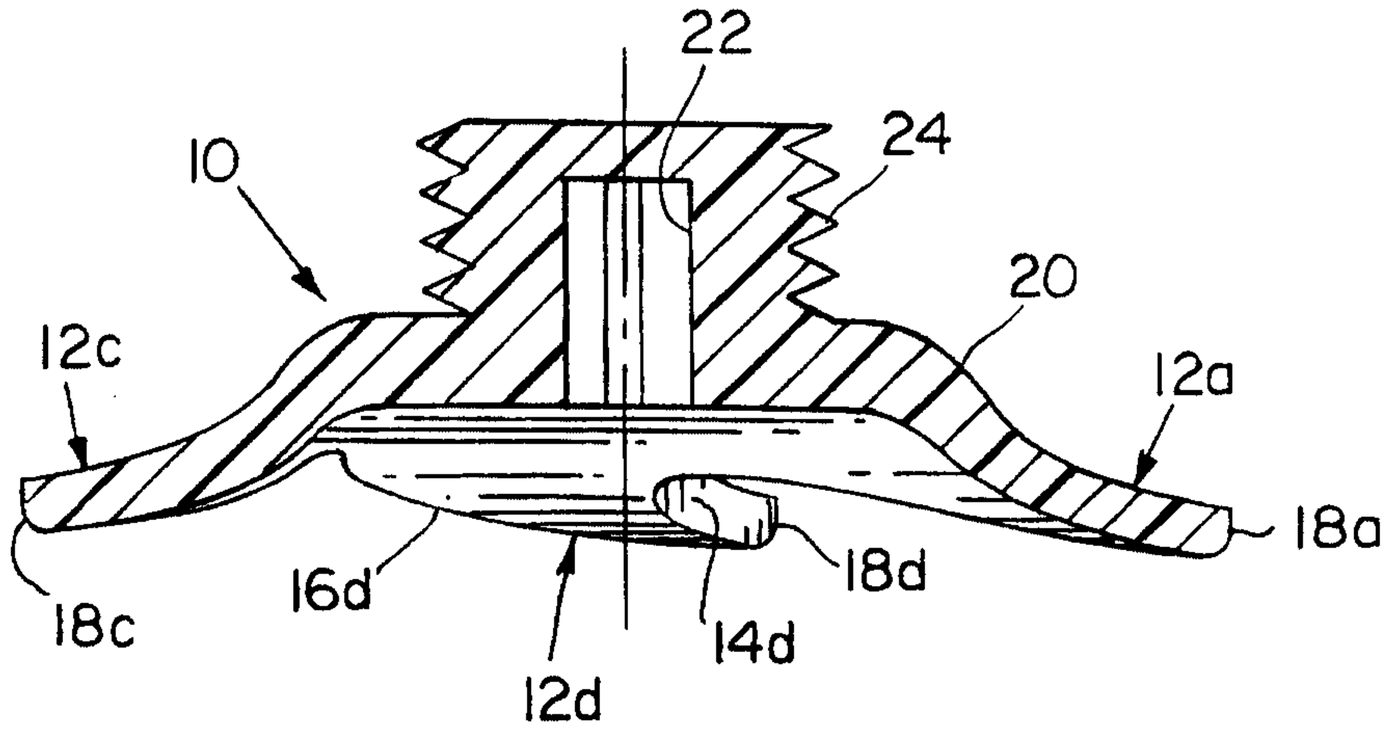
22
24
10
20
12c
12a
18a
18c
16d
18d
14d
12d

FIG. 6

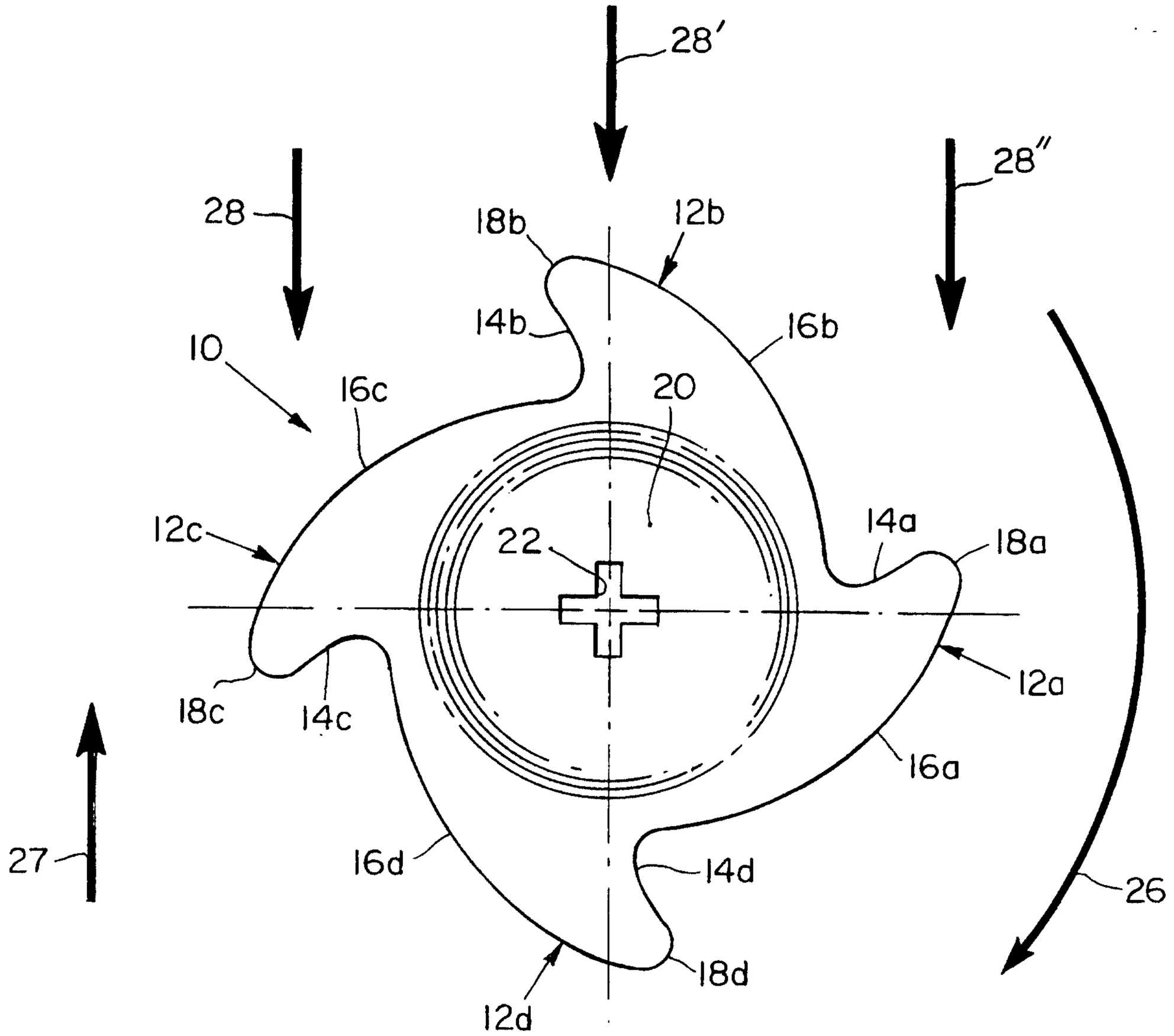
28'
28
28"
18b
12b
14b
16b
10
16c
20
12c
22
14a
18a
12a
18c
14c
16a
27
16d
14d
26
18d
12d

FIG. 4

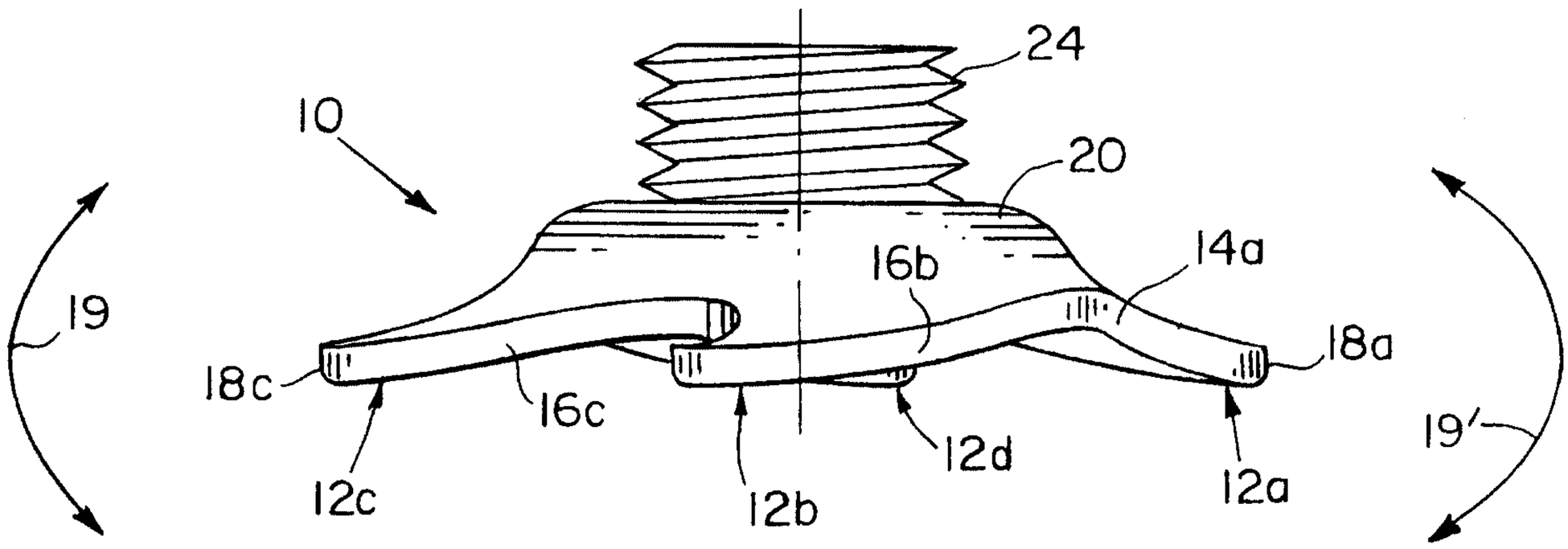
24
10
20
16b
14a
19
18a
18c
16c
19'
12d
12c
12b
12a

FIG. 5

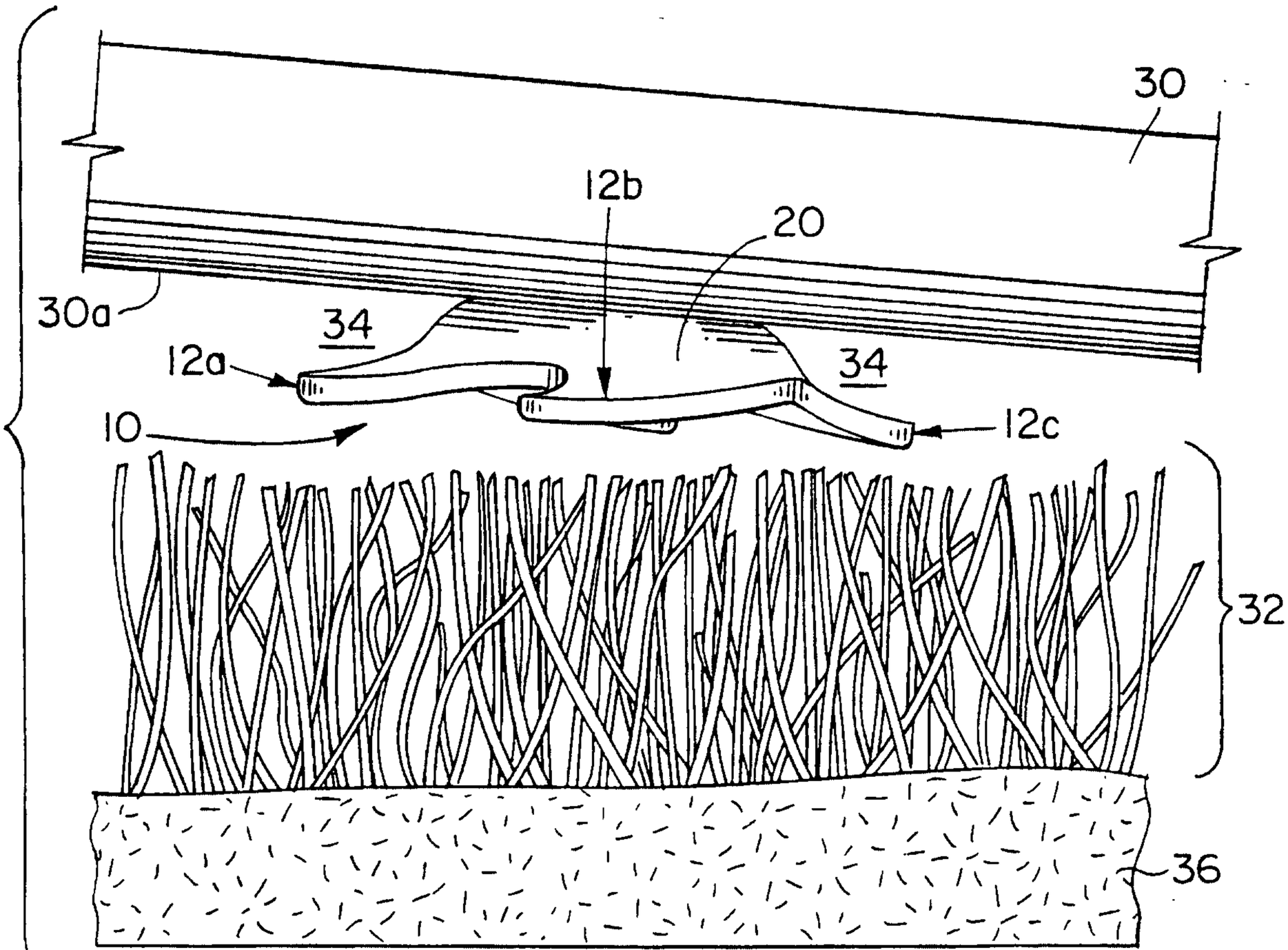
30
12b
20
30a
34
12a
34
10
12c
32
36

FIG. 7

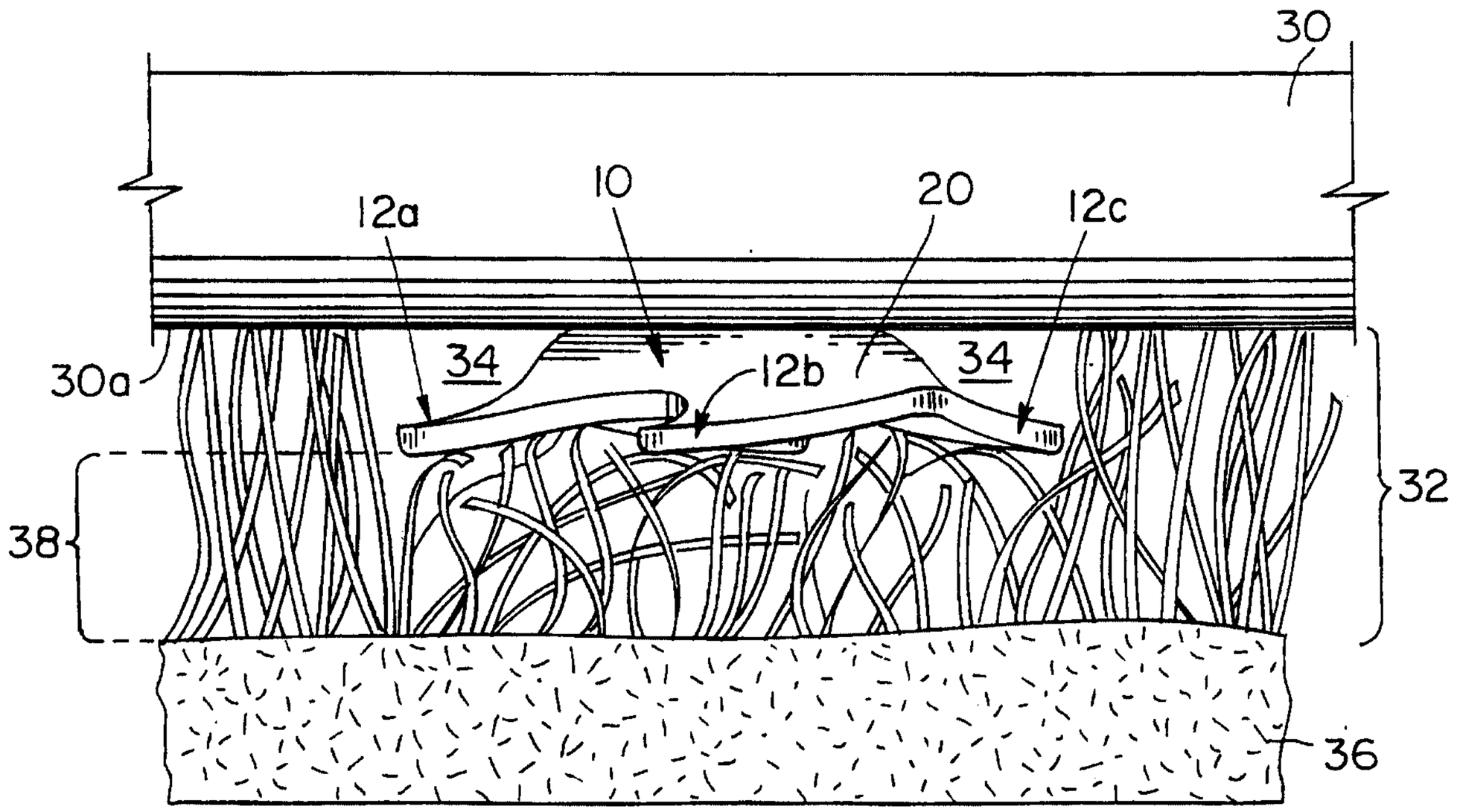
30
12a
10
20
12c
30a
34
12b
34
38
32
36

FIG. 8

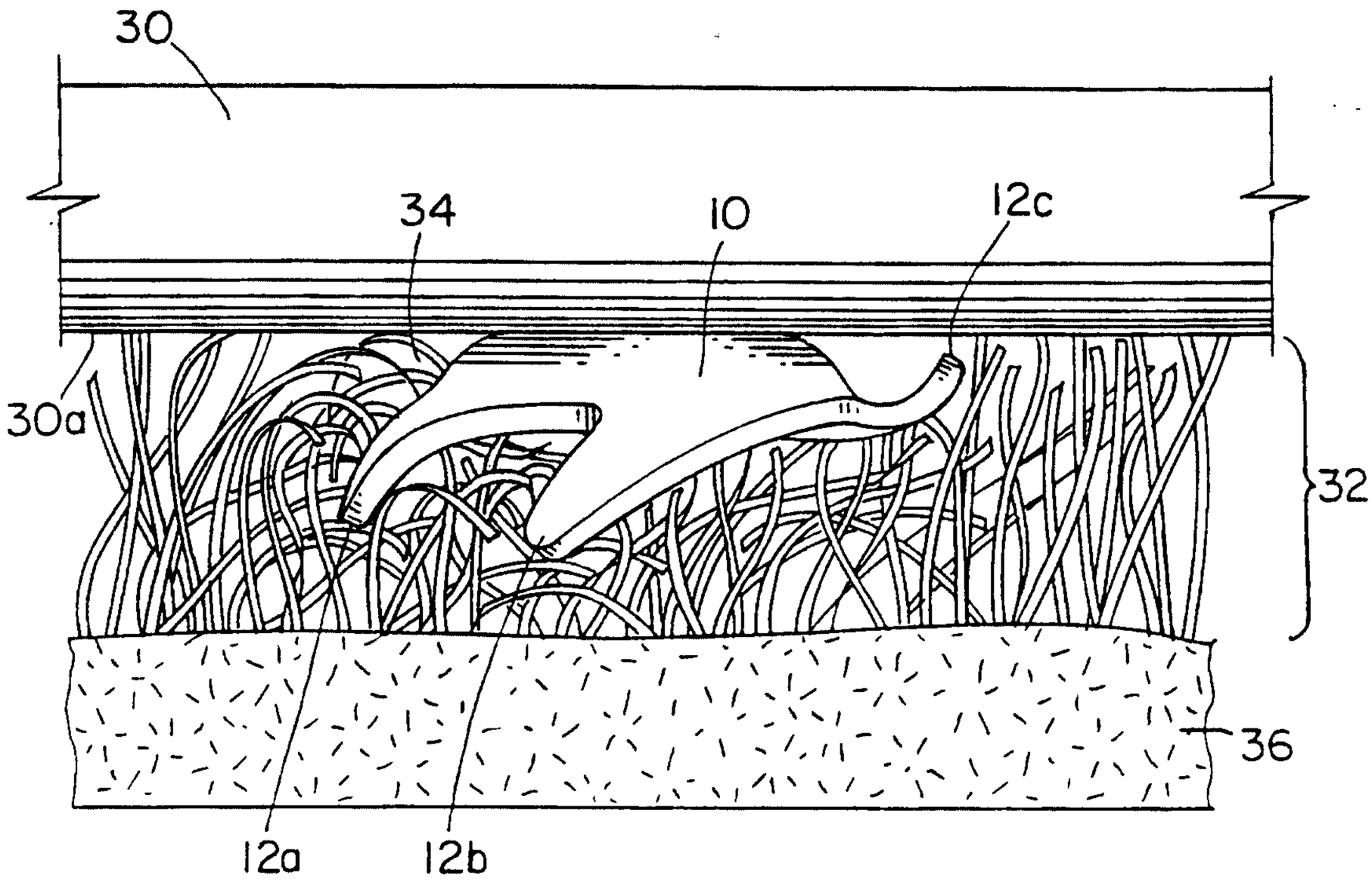

FIG. 9

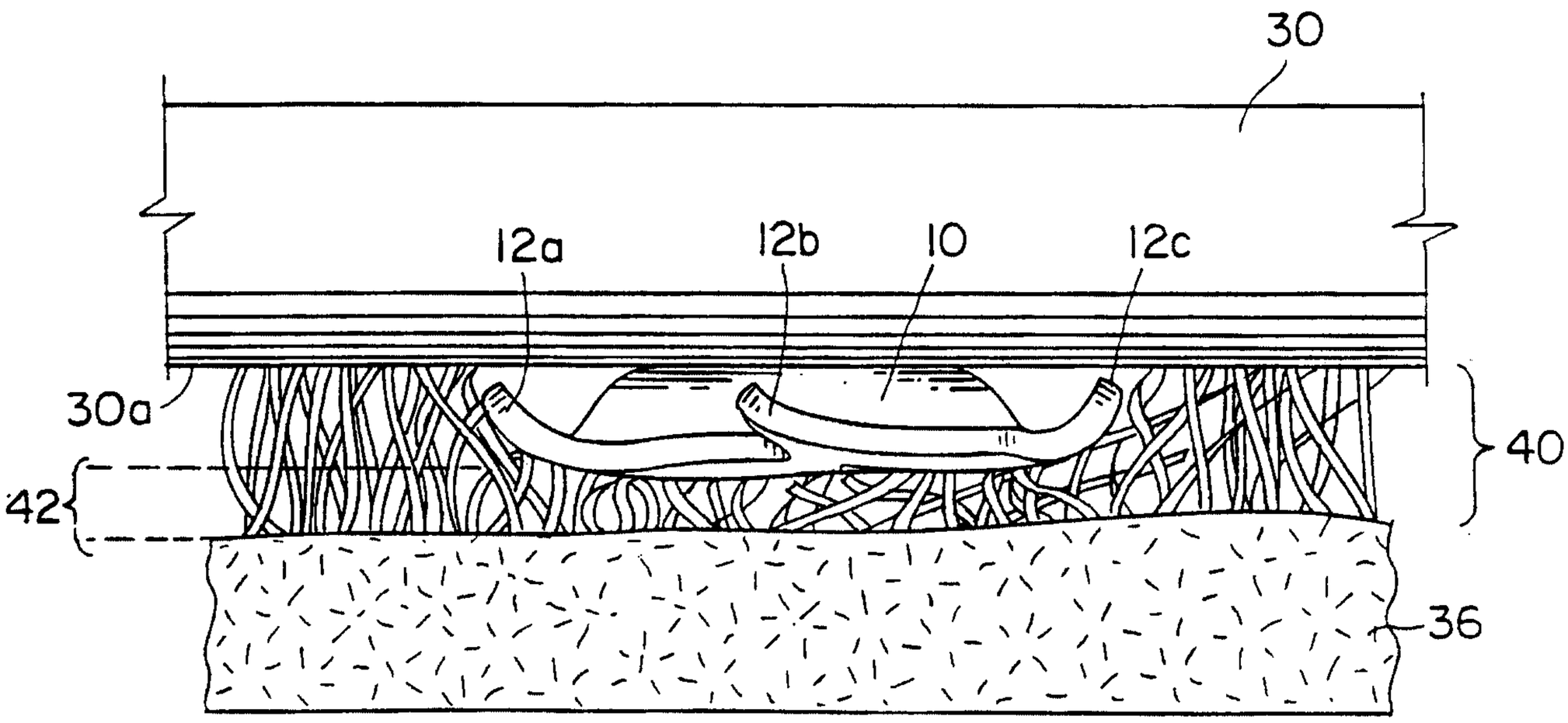

FIG. 10

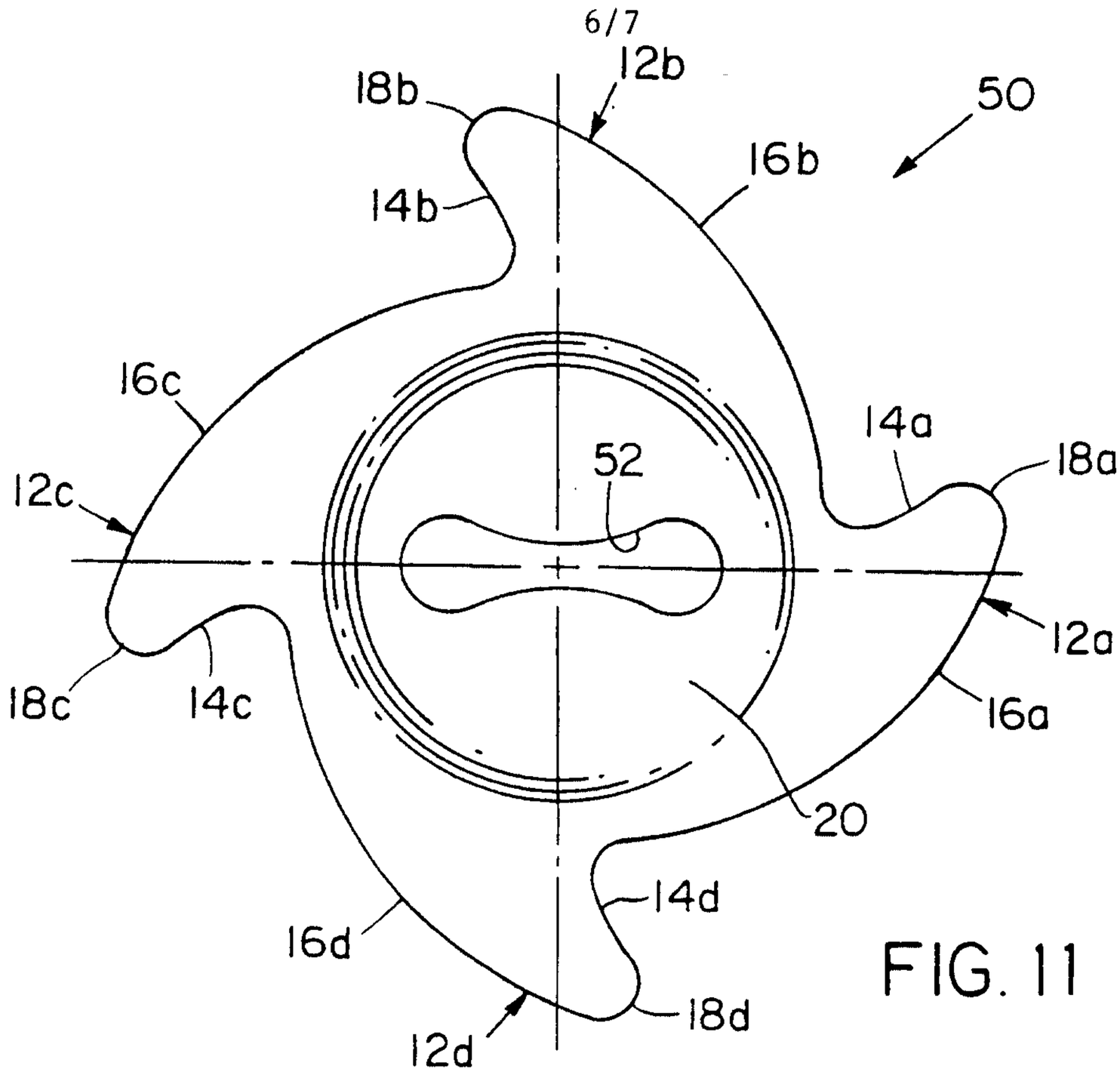
12b
18b
50
16b
14b
16c
14a
18a
52
12c
12a
18c
14c
16a
20
14d
16d
18d
12d

FIG. 11

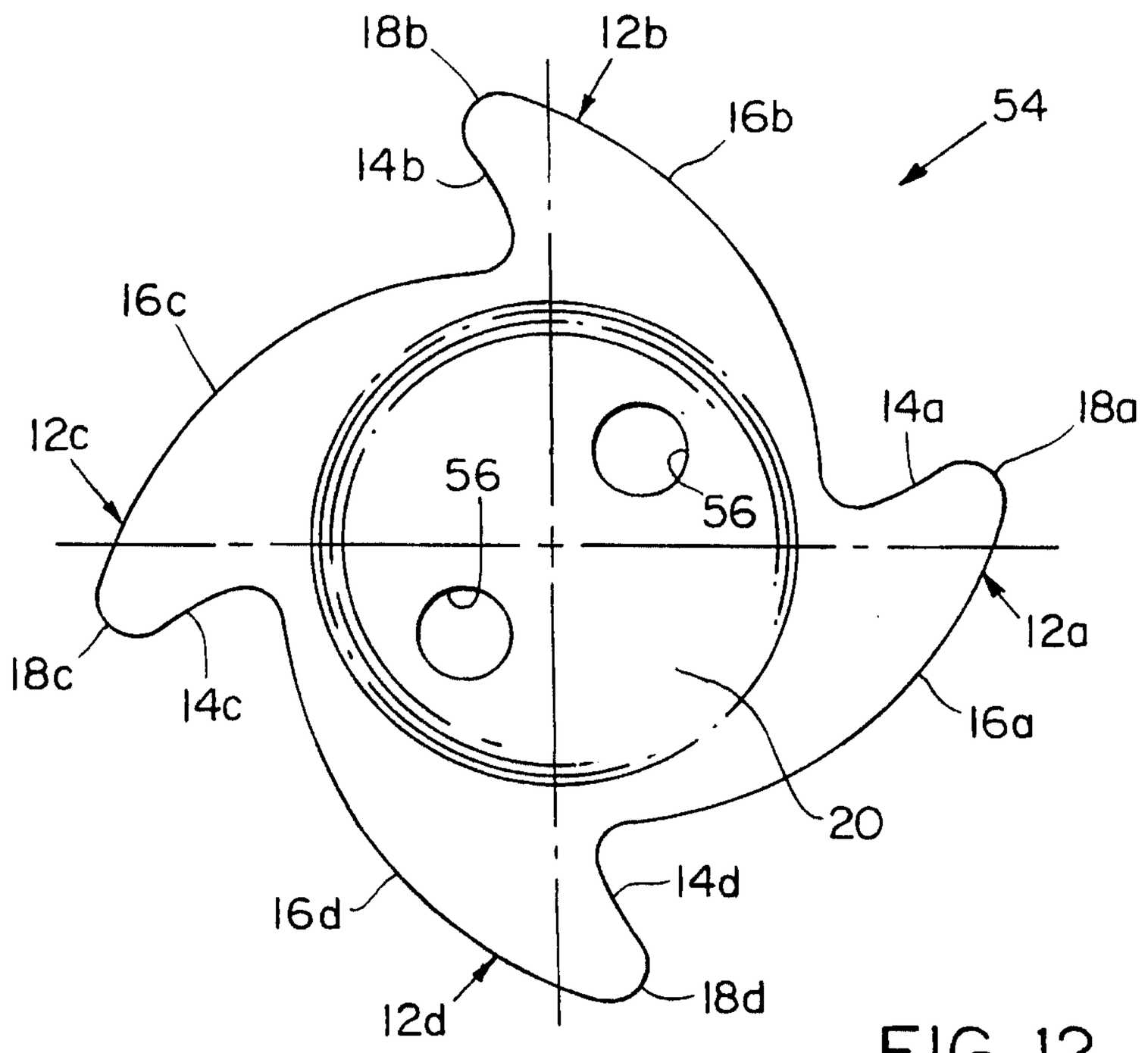
18b
12b
54
16b
14b
16c
14a
18a
12c
56
56
12a
18c
14c
16a
20
14d
16d
18d
12d

FIG. 12

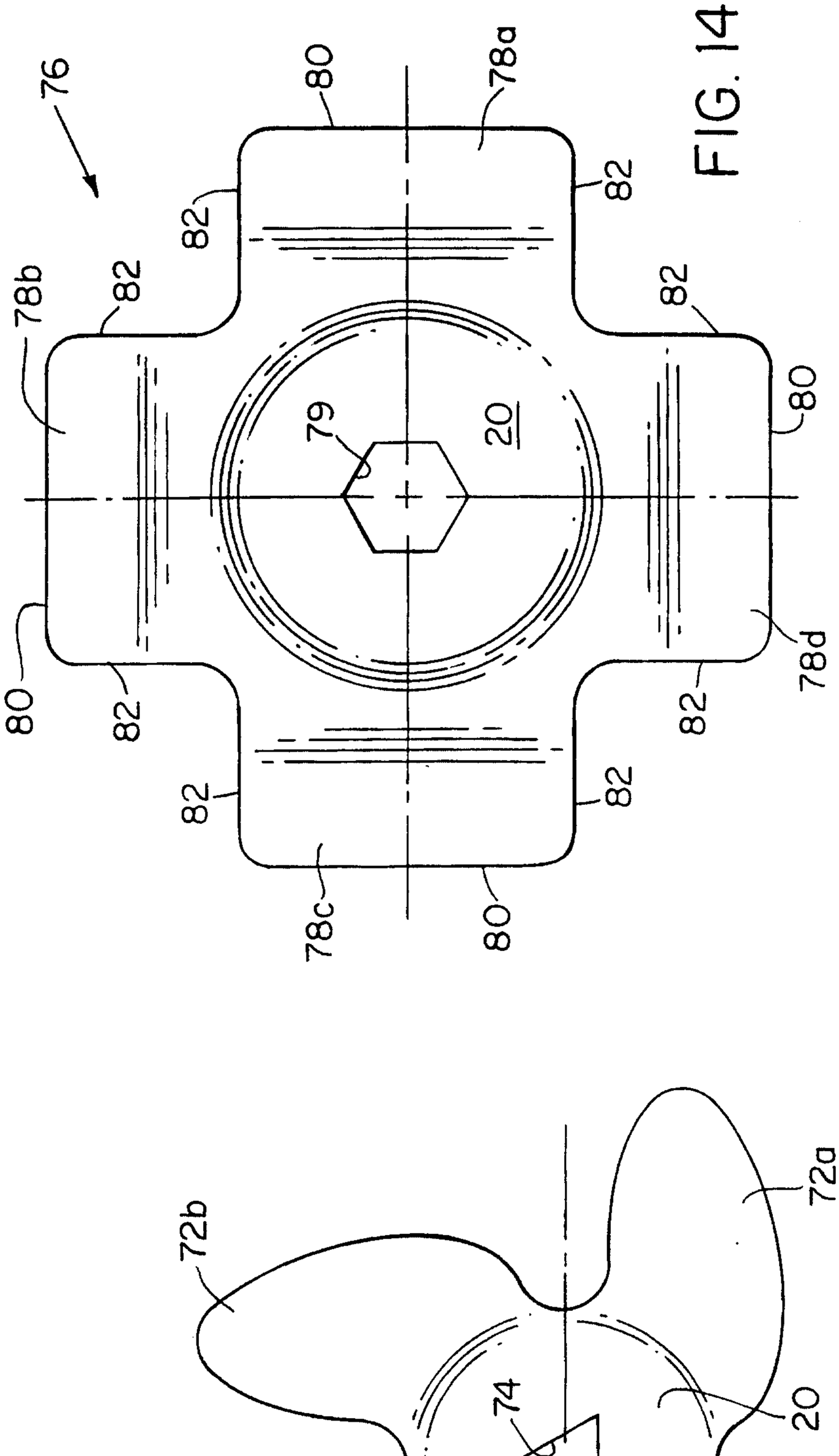

FIG. 14

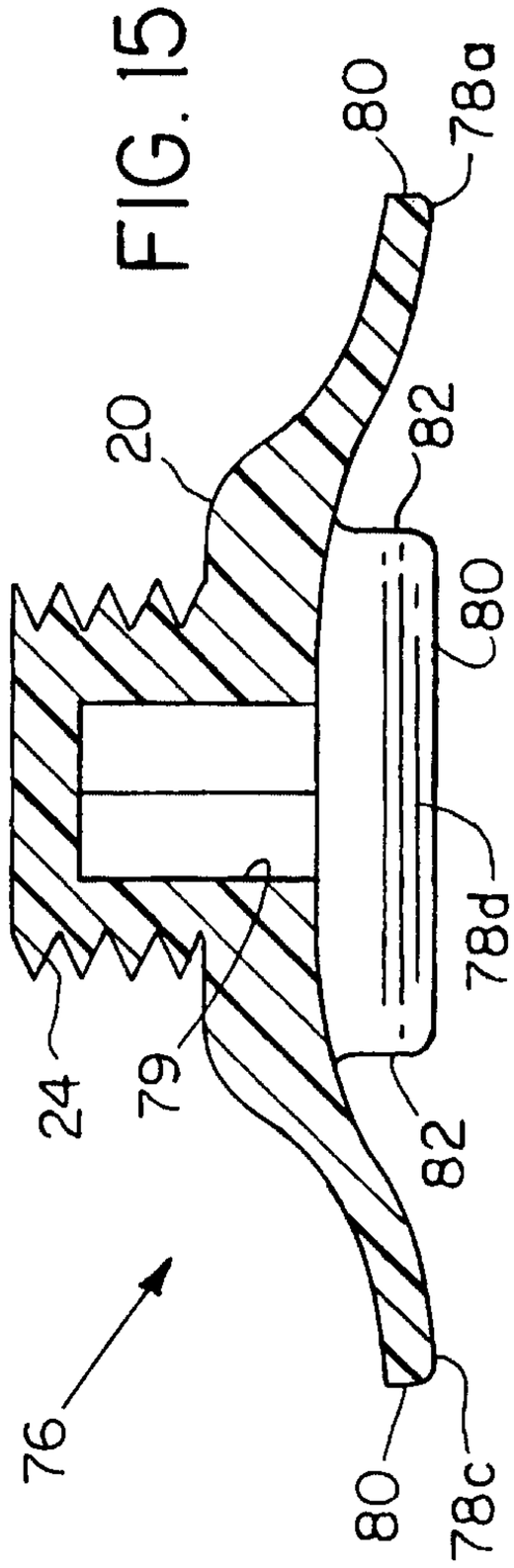

FIG. 15

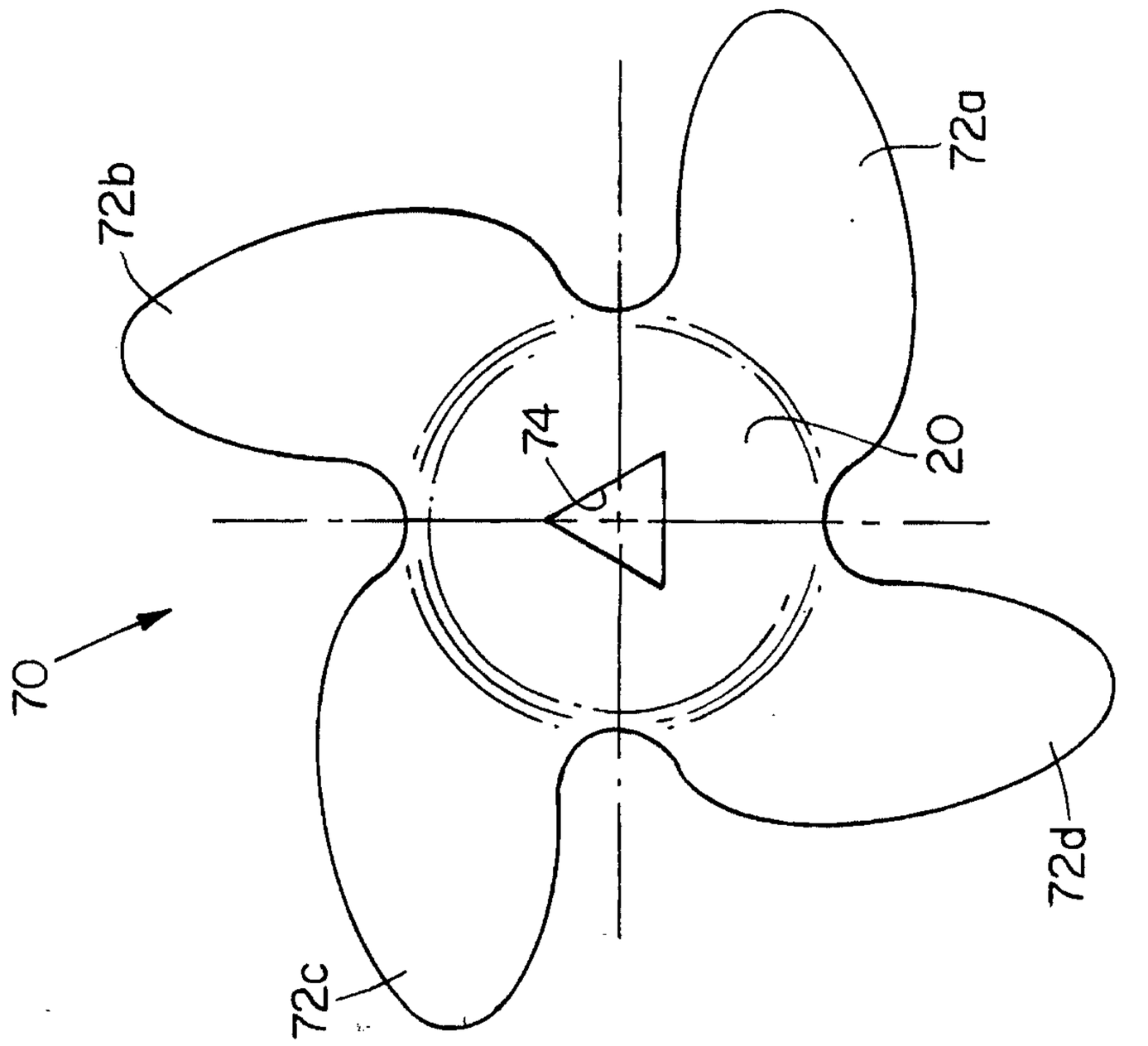

FIG. 13