Aug. 20, 1940. T. A. KIRTON 2,212,161

SHIFTING MEANS FOR INDICATOR TAPES

Filed Aug. 19, 1937 2 Sheets-Sheet 1

Fig. 2

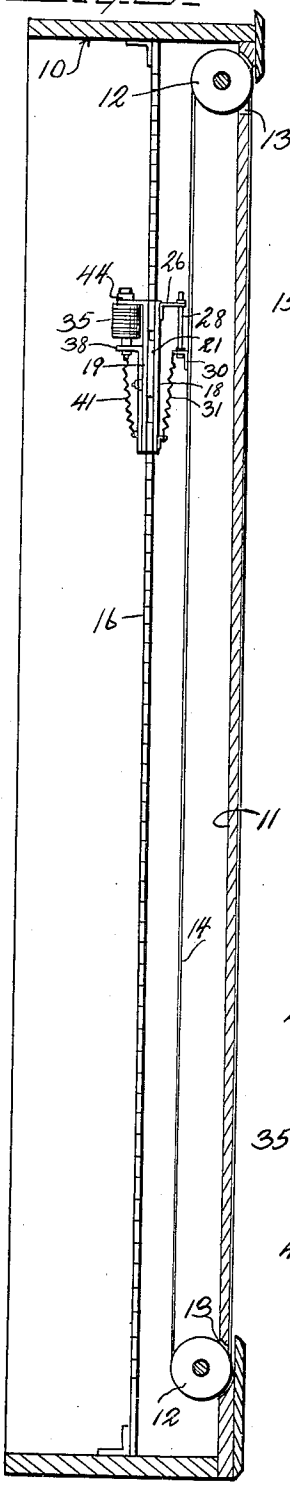

Fig. 1

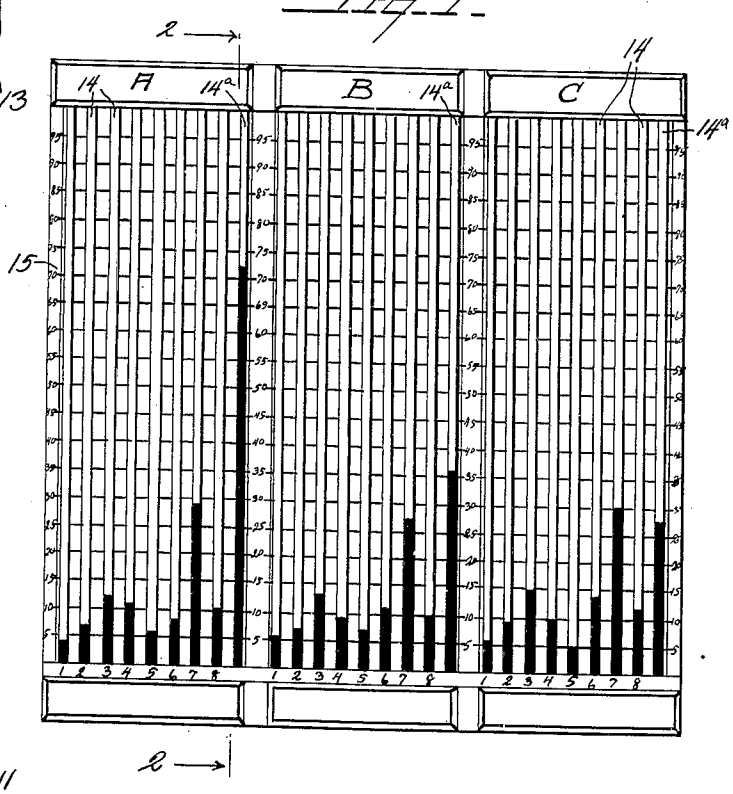

Fig. 3

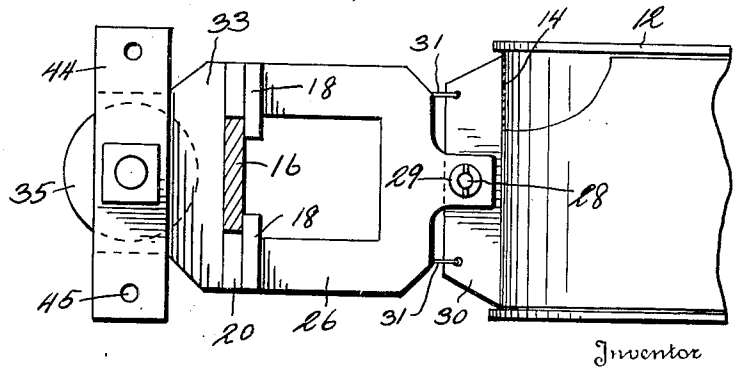

Inventor

T. A. Kirton

By Watson E. Coleman

Attorney

Aug. 20, 1940. T. A. KIRTON 2,212,161

SHIFTING MEANS FOR INDICATOR TAPES

Filed Aug. 19, 1937 2 Sheets-Sheet 2

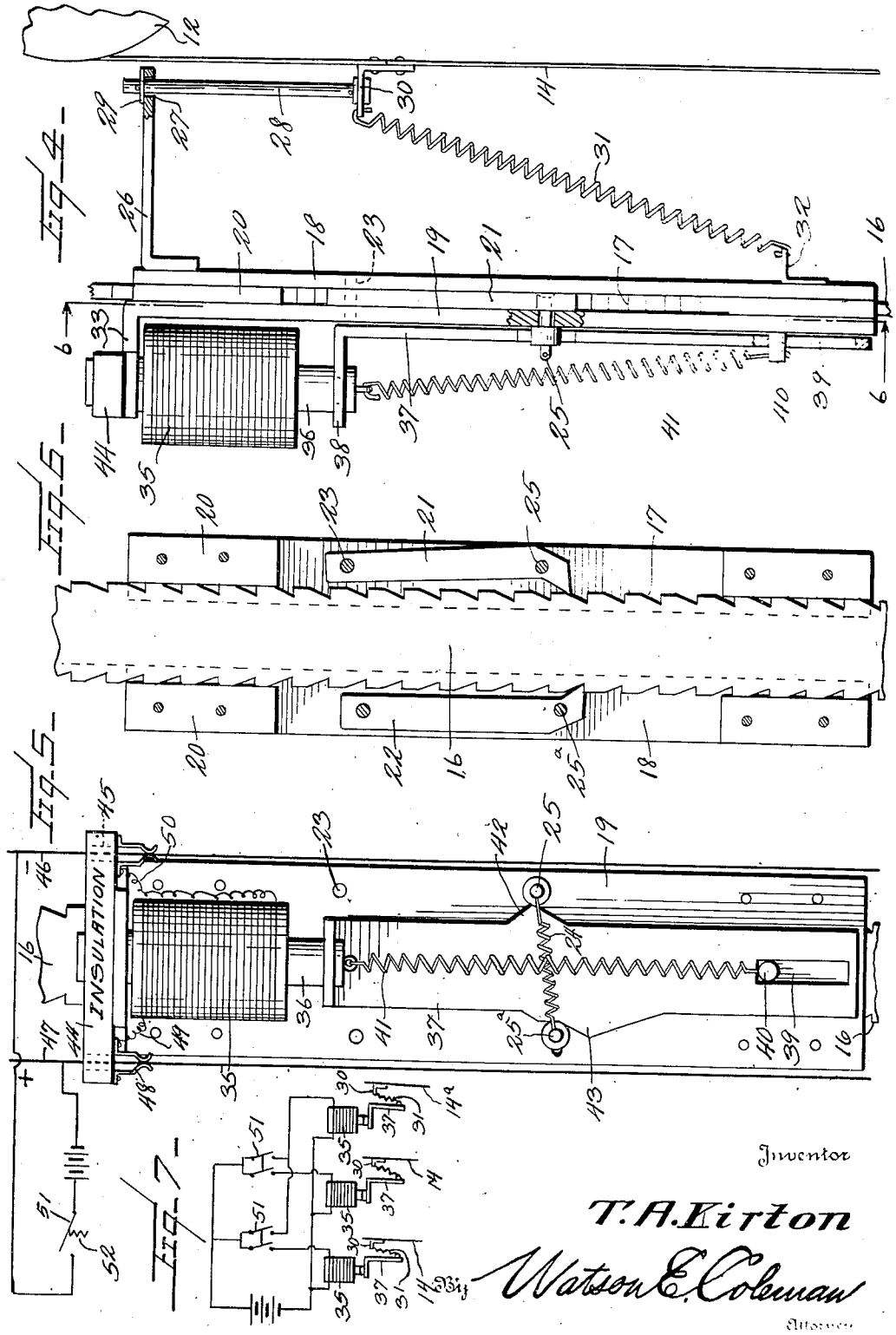

Inventor

T. A. Kirton

By Watson E. Coleman

Attorney

Patented Aug. 20, 1940 2,212,161

UNITED STATES PATENT OFFICE

2,212,161

SHIFTING MEANS FOR INDICATOR TAPES

Thomas A. Kirton, Jacksonville, Fla.

Application August 19, 1937, Serial No. 159,990

7 Claims. (Cl. 177—328)

This invention relates to mechanism for shifting an endless strip step by step in one direction and particularly to electrically operated means for this purpose in which the strip is shifted one step upon the closing of a circuit. This mechanism, while particularly designed as a means for posting race track odds and showing the total amount wagered on all entries, is not limited thereto, however.

The general object of this invention is the provision of means for shifting an endless indicating tape in one direction and in relation to certain index numbers or graduations, thus providing means whereby the number of wagers or the amount of wagers placed on any one entry in a race may be readily indicated or posted and whereby the total wagered on all the entries in a race may be indicated.

Another object of the invention is to provide a mechanism for this purpose which will prevent any sudden jerk or jar being given to the tape which would tend to rupture the tape, and another object is to provide means whereby the actuating mechanism for the tape may be quickly reset either independently of the tape or with the tape.

The particular use for which this mechanism is designed will be better understood after a description of the mechanism and its operation.

My invention is illustrated in the accompanying drawings wherein:

Fig. 1 is a front elevation of a display element or frame for any one race on which the amounts wagered shall be displayed and in which the indicating tapes change automatically as wagers are made upon the several horses in a race.

Fig. 2 is a vertical section on the line 2—2 of Fig. 1, the section being on an enlarged scale.

Fig. 3 is a plan view of the tape shifting mechanism, the vertical rack being in section.

Fig. 4 is a longitudinal side elevation on an enlarged scale of part of the strip and shifting mechanism shown in Fig. 2.

Fig. 5 is a rear elevation of the structure shown in Fig. 4.

Fig. 6 is a section on the line 6—6 of Fig. 4.

Fig. 7 is an electrical diagram showing the electrical connections from two of the entry solenoids and from the totalizing solenoid to the battery and switches.

Referring to the drawings, 10 designates generally a cabinet or display frame of any suitable construction. In Fig. 1, this cabinet or display frame is illustrated as being constructed to display the different kinds of wagers made on different entries in a race and also constructed so that the total amount of each kind wagered on any one race is indicated. The front 11 of this cabinet or display frame is designed to show in parallel columns the wagers made on all of the entries in the race and the total of all wagers on all the entries. Disposed on the inside of the front wall 11 adjacent the upper and lower ends of the frame 10 are the tape-carrying rollers 12, these rollers being disposed adjacent the openings 13. Passing over each pair of rollers is an endless tape 14, one flight of which extends vertically over the front 11 of the case or frame. This tape has a portion which is white and another portion which is colored black, as illustrated in Fig. 1. There are three sections A, B and C in this frame, one section A to show "straight" wagers, a section B to show "place" wagers and C indicating "show" wagers. On the left-hand side of each section are graduations 15 shown as reading from 5 to 95, though it is to be understood that any other desired series of numbers may be used. The tapes which are designated 14a in Fig. 1 in each of the several sections A, B and C are for showing total "straight" bets, total "place" bets and total "show" bets on all of the entries. As illustrated in Fig. 1, there are eight entries in each race and these entries are numbered to correspond with the numbers of the horses in the race. Transverse lines extend across the face of board 11 from the graduations 15 so that these graduations may be read in connection with the several tapes 14 and the tape 14a. It is to be understood that the tape 14a is of exactly the same character as the tapes 14 and operates in the same general manner. Inasmuch as all of the tapes are operated in the same manner, I have illustrated the operating mechanism for only one of these tapes.

Referring now to Fig. 2, it will be seen that extending from top to bottom of the frame 10 or case is a rack bar 16. This is rigidly held at its upper and lower ends as it constitutes the support upon which the tape operating mechanism moves. This rack bar is formed on its opposite faces with the ratchet teeth 17, as shown best in Fig. 6. Operating over this rack bar 16 is a slide comprising an outer plate 18 which moves against the outer face of the rack bar, an inner plate 19 which is disposed in the inner face of the rack bar and intermediate filling pieces 20 which engage loosely against the edge faces of the rack bar and are disposed at top and bottom of the slide, as shown in Fig. 6. Pivoted to the plates 18 and 19 and disposed between the filling pieces 20 are the pawls 21 and 22. These are pivoted upon the

pivot pins 23, and are adapted to swing into or out of engagement with the ratchet teeth of the rack 16. The pawls are both urged toward the rack 16 by means of a spring 24, as shown in Fig. 5, this spring being attached to pins 25 extending out from the rack bars and operating through slots in the plate 19. The outer plate 18 carries at its upper end the outwardly projecting arm 26 which is apertured at 27 for the passage of a vertically extending pin or rod 28 having a stop 29 at its upper end. This rod passes loosely through the aperture 27. The lower end of the rod is rigidly attached to a bracket 30 in turn riveted or otherwise attached to the tape 14, as shown in Fig. 4. Contractile springs 31 are engaged each at its upper end with the bracket 30 and at its lower end with a bracket 32 which is rigidly attached to the plate 18 adjacent its lower end. Now it will be seen that upon the downward movement of the slide 18, the arm 26 will move downward upon the rod or pin 28 without in itself effecting any downward movement of the tape 14 but that this downward movement of the slide causes the tension to be placed upon the springs 31 and that this will act to shift the tape downward until the stop 29 strikes the end of the arm 26 whereupon the further downward movement of the tape is stopped until the next downward movement of the slide occurs.

For the purpose of causing a downward step of the slide, I provide electrically operated means whereby one of the pawls may be shifted outward from its engagement with the rack bar 16 and the other pawl shifted into engagement with the rack bar 16. It will be noticed from Fig. 6 that the pawls 21 and 22 are disposed at different elevations, the pawl 21 being higher than the pawl 22, and thus when one pawl, as for instance, the pawl 22, is released from its engagement with the rack bar 16 and the other pawl 21 forced inward, the slide will drop half the length of one ratchet tooth before the pawl 21 engages the next adjacent lower ratchet tooth. The mechanism for operating the pawls is as follows.

The plate 19 at its upper end is angularly extended at 33 to support a solenoid 35, the core of which is designated 36. This core is operatively connected at its lower end to the upper end of a cam plate 37, the upper end of this cam plate being angularly extended at 38 to engage the core 36. The lower end of the cam plate is slotted at 39 and is guided by a pin 40 projecting outward from the plate 19 of the slide. A spring 41 is attached to the lower end of the core or to the outwardly projecting angular portion 38 and at its lower end to the pin 40, so that the core of the solenoid and the cam plate are urged downward and supported upon the pin 40 in the position shown in Fig. 5. The cam plate is provided with two cams 42 and 43. When the cam plate is in its lowermost position, as illustrated in Fig. 5, the cam 43 is disposed below the pin 25a of the pawl 22, while the cam 42 is disposed with its apex immediately opposite the pin 25 of the pawl 21, so that this pawl 21 is urged outward to the position shown in Fig. 6 and away from the teeth of the rack bar while the pawl 22 is urged into engagement with the rack bar by the spring 24. When the solenoid is energized, the core 36 is drawn upward in an obvious manner and this causes the cam 42 to rise above the pin 25 permitting the pawl 21 to swing inward while the cam 43 shifts the pawl 22 outward away from the rack bar. Thus the slide can drop the space of one-half tooth on the rack bar until the pawl 21 engages the next succeeding tooth. Immediately upon the cessation of current through the solenoid 35, the spring 41 will draw the core 36 together with the cam plate downward, the cam 43 will move downward to the position shown in Fig. 5, permitting the pawl 22 to swing inward and the cam 42 will shift the pawl 21 outward and the slide will drop the distance of another half tooth on the rack bar. This dropping of a distance of one tooth constitutes one step of the slide on the rack bar.

For the purpose of energizing the solenoid, I provide a cross-bar 44 of insulating material which is mounted upon the angular portion 33 of the plate 19 and which is provided adjacent its ends with two apertures 45 for the passage of the wires or other conductors 46 and 47. The wire 47 is connected to the positive side of a source of energy while the wire 46 is connected to the negative side of the source. Attached to the cross-bar 44 at each end thereof are a pair of contact fingers 48 which engage with the wires 46 and 47, respectively. From one set of contact fingers a conductor 49 leads to the coil of the solenoid and a return conductor 50 leads to the wire 46.

The wires 46 and 47 may be connected to any means whereby a circuit may be closed between said wires and a source of current. In the use of this device as an indicator for indicating the number of bets made or the amount of money wagered on any single horse or entry in a race, the circuit through the wires 46 and 47 and the source of current may be closed by the depression of a switch by a ticket seller when the ticket is bought, or by the dropping of a stub of a ticket into a machine, or by mechanism such as is shown in my prior application, Ser. No. 37,056, issued Jan. 10, 1939 as Patent No. 2,143,735. I have shown in Fig. 5 diagrammatically the connection of the wires 46 and 47 to a battery and have shown diagrammatically a switch 51 whereby the circuit can be closed. It is to be understood that this is purely symbolic of the fact that a circuit through the wires 46 and 47 may be intermittently closed and opened, the switch being shown as thrown to an opened position by means of a spring 52 or like means.

In the operation of the structure shown in Figs. 2 to 6, it may be assumed that at the start, the upper end of the black portion of a tape 14 is below the numeral 5 of the graduations 15 or not visible. When a predetermined number of bets or bets to a predetermined amount have been made, the circuit through the wires 46 and 47 will be closed. This will energize the solenoid which will lift the core 36 and the cam plate 37. This, as before explained, will shift the pawl 22 outward, allowing the slide to drop one-half notch on the rack bar 16 and since the switch is opened, as for instance, by the spring 52, the core will be depressed with the cam plate 37 under the action of spring 41 and the pawl 21 will again swing outward and the pawl 22 inward, and the slide will drop another half notch. The dropping of the slide one notch constitutes in the present case one step of the tape. When the slide moves downward this one step, the arm 26 will move downward from below the stop 29 and the spring 31 will be placed under greater tension which will pull downward on the tape 14. The slide is stopped in its downward movement by one or the other of the pawls but the tape continues to move downward under the action of the spring 31 until the stop 29 again engages the arm 26, thus the

tape will be given a step by step movement downward and the black portion of the tape shown in Fig. 1 will move upward upon the outer flight of the tape. By reading the graduations 15 in accordance with the position of the black portion of the tape, the number of wagers made or the amount of money wagered can be readily determined.

I have indicated the graduations as progressing in increments of five but any other multiple of progression may be used. The tape may be caused to shift one step upon a predetermined number or predetermined amount of wagers made. The totalizer tape 14a will be actuated in precisely the same manner as any one of the tapes 14 except that the gear rack 16 for the totalizer tape has more ratchet teeth per foot than the gear racks for the entries, so as to provide for an indication of the percentage if "odds" are to be indicated at a track where there is a tax and a "take." Thus, for instance, if the tax and "take" is equal to 15%, the slide connected to the totalizer tape 14a should move only 85% of the movement given to an entry slide. Thus if there are twenty ratchet teeth on the rack for an entry to each 10 in. of rack, then the rack for the pool or total would have the same twenty ratchet teeth in 8½ in. of rack. If it be desired to show the total bet, that is, the total number of bets or the total amount wagered without deducting the 15%, then the ratchet rack 16 would have twenty ratchets to 10 in. of gear rack exactly as the entries have. It is to be understood, of course, that every time that the circuit through one of the entry solenoids 35 is closed, the circuit through the totalizer solenoid associated with the tape 14a would also be closed. Thus each time a wager or a certain predetermined number of wagers is made upon an entry, the solenoid for that particular entry is energized and the solenoid for the totalizer is energized. Thus the totalizing tape 14a will show the sum of all the wagers made whether in dollars or number of wagers and the "take" and "tax" may be deducted automatically by the totalizer or not as desired, in the manner stated. Inasmuch as the means for moving the totalizer tape 14a is precisely the same as the means for operating the separate entry tapes, I have not separately illustrated the means for operating the totalizer tape. At the end of the race, of course, all of the slides are raised to the top of their respective racks 16 by any suitable means either manually or mechanically.

In Fig. 7, I have indicated diagrammatically the manner in which the total indicating tape 14a and two entry indicating tapes 14 may have their solenoids electrically connected so that upon the closing of a circuit through any one of the entry solenoids, the solenoid of the totalizing tape 14a will be also energized. This is purely diagrammatic and I do not wish to be limited to this specific means for the purpose, as I purpose to close the circuits to the entry solenoids by means of certain parts of the totalizing mechanism which is illustrated in Patent No. 2,143,735 before referred to, this patent showing a reciprocating slide which may be used as a switch actuating means.

What is claimed is:

1. An indicator of the character described, including a longitudinally movable element, the element having a vertical portion provided with an index mark, and means for giving the element a step by step motion in one direction including a vertically disposed bar, a slide movable upon the bar and operatively connected to the element, and means for giving the slide a step by step movement along the bar in the opposite direction to the movement of the element.

2. A mechanism for imparting a step by step motion in one direction to a longitudinally movable elongated element, comprising a vertically disposed bar paralleling said element and formed with ratchet teeth on its edge faces, a slide vertically movable along said bar, means operatively connecting the element to said slide pawls carried by the slide and engaging opposite ratchet faces of the bar, one of said pawls being longer than the other, and electrically actuated means for shifting one of said pawls outward away from the bar and causing the other pawl to move into engagement with the bar upon a closing of a circuit through the electrically actuated means and causing the outward movement of the previously engaged pawl and the inward movement of the other pawl into engagement with the ratchet bar upon an opening of said circuit.

3. A mechanism for imparting a step by step motion in one direction to a longitudinally movable elongated element, comprising a vertically disposed bar paralleling said element and having ratchet teeth on its opposite edges, a slide movable downward upon said bar and operatively connected to the element to shift it with the slide, oppositely disposed pawls carried by the slide and alternately engageable with the teeth on the ratchet bar, means for shifting one of said pawls out of engagement with the ratchet tooth and shifting the other pawl into position to engage a succeeding tooth including a member constructed and arranged to shift one of said pawls outward and permit the other pawl to move inward, an electric solenoid carried by the slide and having a movable core operatively engaging said member, and a spring urging the member and core in one direction.

4. A mechanism for imparting a step by step motion in one direction to a longitudinally movable elongated element, comprising a vertically disposed ratchet bar paralleling said element and having ratchet teeth on its edge faces, a slide freely movable along said bar and operatively connected to the element to shift it, pawls adapted to alternately engage the ratchet teeth, a spring urging both of said pawls toward the edge faces of the ratchet bar, a cam plate mounted upon the slide for longitudinal movement with relation thereto having offset cams adapted to operatively engage the pawls to alternately shift one of the pawls outward and permit the other pawl to swing inward toward the edge of the ratchet bar under the action of said spring, an electric solenoid mounted upon the slide and having a movable core operatively connected to said cam plate to shift it, and means urging the cam plate in a direction to draw the core out of the solenoid.

5. A mechanism for imparting a step by step motion in one direction to a longitudinally movable elongated element, comprising a vertically disposed ratchet bar paralleling said element and having ratchet teeth on its edge faces, a slide freely movable along said bar operatively connected to the element to shift it, pawls adapted to alternately engage the ratchet teeth, a spring urging both of said pawls toward the edge faces of the ratchet bar, a cam plate mounted upon the slide for longitudinal movement with relation thereto having offset cams adapted to operatively

engage the pawls to alternately shift one of the pawls outward and permit the other pawl to swing inward toward the edge of the ratchet bar under the action of said spring, an electric solenoid mounted upon the slide and having a movable core operatively connected to said cam plate to shift it, means urging the cam plate in a direction to draw the core out of the solenoid, a pair of electric current conductors extending parallel to the ratchet bar adapted for connection in circuit with a source of energy, a cross-bar operatively supported upon the slide, and contact members carried by the cross-bar and electrically engaging said conductors, the contact members being electrically engaged with said solenoid.

6. Means for giving an elongated longitudinally movable element a step by step movement in one direction including a vertically disposed bar, a slide mounted upon the bar for sliding movement along the bar, manually controllable means for giving the slide a step by step movement down the bar, a bracket mounted upon the element, a contractile spring coupling the bracket with the slide to form a shock absorbing connection, and means on the slide for limiting the downward movement of the element under the action of said spring.

7. Means for giving an elongated longitudinally movable element a step by step movement in one direction including a vertically disposed bar, a slide mounted upon the bar for sliding movement along the bar, manually controllable means for giving the slide a step by step movement down the bar, a bracket mounted upon the element, a contractile spring coupling the bracket with the slide to form a shock absorbing connection, a bracket extending from the slide toward the element and having an aperture in its extremity, and a pin extending upward from the bracket on the element and through the aperture on said second named bracket, the pin having a stop at its upper end, the pin sliding freely through the aperture in the bracket.

THOMAS A. KIRTON.