Feb. 14, 1939. W. H. FRANK ET AL 2,146,811

SWITCH

Filed Dec. 26, 1935

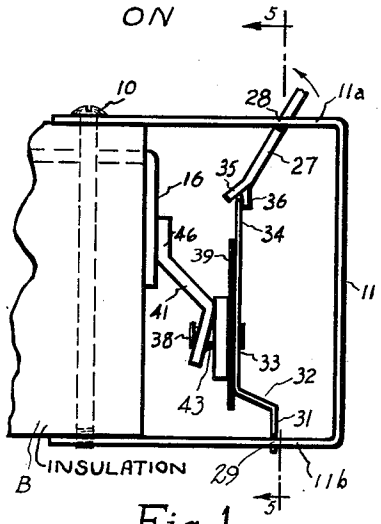

Fig. 1

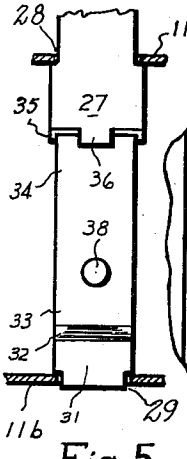

Fig. 5

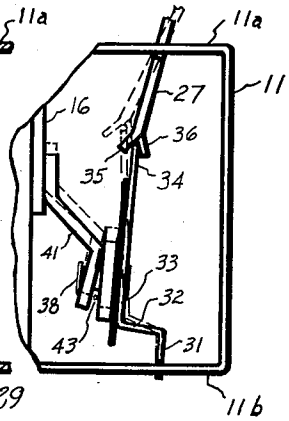

Fig. 2

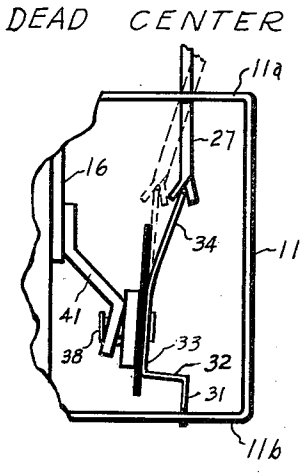

Fig. 3

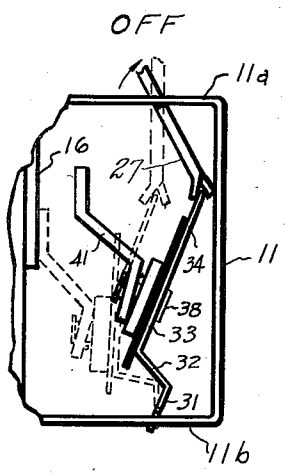

Fig. 4

INVENTORS.
William H. Frank
BY Joseph A. Messing
Daniel Gullen
ATTORNEY.

Patented Feb. 14, 1939 2,146,811

UNITED STATES PATENT OFFICE

2,146,811

SWITCH

William H. Frank and Joseph A. Messing,
Detroit, Mich.

Application December 26, 1935, Serial No. 56,229

4 Claims. (Cl. 200—67)

This application discloses a switch which can be understood best upon reference to the appending drawing. In the drawing.

Fig. 1 shows the operating parts of the switch in "on" position;

Fig. 2 shows diagrammatically (dotted lines) the parts in "on" position, and (full lines) the parts in the position they occupy just after the switch handle has been moved from "on" partway toward its "off" position;

Fig. 3 shows the parts (dotted lines) in the position of Fig. 2 and (full lines) at dead center;

Fig. 4 shows (dotted lines) the parts at dead center, and (full lines) in "off" position.

Fig. 5 is a section on line 5—5 Fig. 1.

The switch herein disclosed comprises a body B with which is associated the operating assembly of the switch, the latter including a C-shaped carrier strap 11, opposed portions 11*a* and 11*b* of which embrace opposed surfaces of the body and are joined by a screw 10 to associate the operating assembly with the body.

Supported by the body is a stationary contact 16 which forms a rigid and immovable abutment for the movable contact of the switch.

The operating mechanism includes an operator in the form of a manually controllable lever handle 27 passing through a slot 28 in the portion 11*a* of the C strap 11 so as to be pivotally connected to the strap. In the portion 11*b* of the C strap is a slot 29 receiving and thus pivotally mounting the end 31 of a flat spring 32 of a suitably resilient sheet metal, the latter having its central portion 33 bowed and its upper end 34 received between oppositely directed portions 35—36 at the lower end of the handle 27 whereby a pivotal connection is provided between the handle and the bow spring.

Secured to the central portion 33 of the bowed spring by means of a rivet 38 are rigid insulation plates 39 and mounted by the rivet 38 is a contact 41, there being a coil spring 43 on the rivet which provides a resilient and floating mounting for the contact on such rivet. The contact is formed with a contact-making portion 46 adapted to engage the contact 16 in a butt or pressure contact manner.

The operation of the switch is as follows: When the switch is in "on" position the bow spring is compressed longitudinally and the tendency of the bow spring to expand lengthwise is resisted by the abutments for the ends of the bow spring; one end is held against movement away from the other by the pivotal connection between such end 31 and the portion 11*b* of the strap 11 and the other end of the bow spring is held against movement away from the first by its engagement with the lower end of the handle, which is restrained against clockwise rotation in "on" position by the engagement of contact 41 against contact 16 and by the engagement of the right side of handle 27 against the right edge of slot 28. The expanding tendency of the spring retains the parts in "on" position with the contact 41 pressed firmly against the stationary contact 16; the reaction of contact 16 against contact 41 tends to expand the spring 32 and consequently tends to move handle 27 further clockwise.

When the parts are to be moved from "on" position to "off" position handle 27 is rotated counter-clockwise on its pivot at 28. Initial movement of the handle compresses the spring 32 lengthwise but does not move the spring as a whole about its pivoted end 31 to any appreciable extent and the movement of the spring during this movement of the handle, other than its contracting movement, is a movement of the upper portion 34 thereof transversely, as indicated in Fig. 2. The movement of the spring is reflected in a slight movement of the contact 41 downwardly along the stationary contact 16, with a wiping motion; the movement of the spring, however, does not cause the contact 41 to move away from the stationary contact 16 and it will therefore be observed that the initial movement of the handle 27 does not cause contact break.

Continued movement of the handle clockwise from the position shown in full lines in Fig. 2 and in dotted lines in Fig. 3 to the dead center position shown in full lines in Fig. 3 does not move the spring bodily about its pivoted lower end 31 to any appreciable extent but merely flexes the upper end 34 of the spring to a great extent until dead center is reached. Since the lower central portion 33 of the spring does not move from the dotted line position of Fig. 3 (full lines of Figs. 2), the movable contact 41 dies not separate from the stationary contact 16 and therefore until dead center is reached there is as yet no break of the switch contacts.

As soon as the handle 27 and the spring 32 pass over center, and the handle is freed to move independently, the potential energy of the spring 32 created by its having been compressed endwise and also by its having had its upper end flexed laterally from its normal condition, snaps the spring to the "off" position. Such action of the parts causes the desired quick separation of the movable contact from the stationary contact and such movement of the parts continues until the pivotal

connection between the spring 32 and the handle 27 reaches the strap 11 which acts as a limiting stop for the operating parts of the switch.

In "off" position the parts are held at rest by virtue of the expanding tendency of the bow spring.

It is observed that the proportion of the parts are such that at all times the bow spring is compressed longitudinally, to a greater or lesser extent, so that the potential energy stored therein, never completely released, acts to hold the parts at rest, if they should be at rest, and to move the parts if they are freed to move.

The handle 27 and the spring 32 together form a toggle mechanism. The "knee" point of the toggle is the pivotal connection 34—35—36 and the stationary points of the toggle are the pivotal connections 27—11*a* and 31—11*b*. When the parts are in "on" position, the toggle has its "knee" point near the stationary contact and the unreleased potential energy of the spring, held unreleased by the reaction caused by the engagement of contact 16 by the movable contact 41, insures the toggle being held stationary in "on" position. In "off" position the toggle is reversed from the condition it had when it was in "on" position, without, however, the spring itself being reversed, and the unreleased energy stored in the spring 32, held unreleased by the engagement of the "knee" point of the toggle with the strap 11 causes the parts to remain at rest.

In the movement of the "knee" point to and from "on" and "off" positions, the spring 32 is compressed and stressed from the conditions it has when the parts are at rest and such compressing and stressing of the spring in the initial part of each movement of the mechanism stores potential energy which is suddenly released by the expansion of the spring when the spring is freed in the latter part of each movement of the mechanism.

The proportions of the parts are such that, especially in the movement of the parts from "on" to "off" position, the spring is stressed by being compressed lengthwise to a tremendous extent long before it is moved bodily or flexed transversely. In spring mechanisms of this character, a very slight degree of longitudinal compression of the spring sets up a tremendous energy therein, far greater than is the case when the spring is flexed transversely.

Summary

It will be observed that the contact 41 is so located and mounted that the reaction thereon offered by contact 16 tends to expand the contractible and expansible toggle link 32 and this tends to rotate the toggle as a whole further along the path of and in the direction of movement of the toggle from "off" (Fig. 4) to "on" (Fig. 1).

It will also be observed that the link 27, between points 28—35, is shorter than link 32; consequently, rotation of point 35—36 causes a considerable contraction and expansion of link 32 as well as a transverse movement thereof.

It will also be observed that portion 34 of link 32 is free to move away from contact 16 (Fig. 2 to Fig. 3) without the link moving as a whole away from contact 16; this permits the handle to move a considerable distance, to the dead center position, without causing contact separation.

We claim:

1. A pressure contact switch comprising mating movable and stationary contacts, a double link toggle, with the links pivotally connected to each other at one end of each and pivotally mounted in fixed pivots at the other end of each, one of said links being an operating link and the other being operated on thereby, the operated link having a single offset or jog therein near its fixed pivot end and being resiliently formed to have a tendency to expand when contracted, and carrying the movable contact which is connected thereto at a point between its ends and is disposed on the convex side of the toggle when the latter is in closed circuit position and on the convex side of the jogged link, the links being so related and positioned and mounted that on movement of the links from closed circuit position to open circuit position the operating link moves over center a substantial distance before the jogged or operated link separate the movable contact from the fixed contact, with the jogged link reaching an energy discharging position as the operating link passes over center, with the energy discharged at such position effective to move both links from dead center position to off or contact broken position, and means positioned to engage the links and stop motion of the links out of closed circuit position before they reach a position wherein the jogged link can discharge all of its energy, the means holding the parts in such position due to the tendency of the jogged link to expand after the operating link has reached over center following contraction of the jogged link as the operating link approached over center.

2. A construction of the character described in claim 1 wherein the jogged link is so proportioned that the distance between the fixed pivot thereof and its pivotal connection to the other link is considerably greater than the distance between the line connecting such fixed pivot and such pivotal connection and the point of connection between such link and the movable contact.

3. A construction of the character described in claim 1 wherein the jogged link is so proportioned that the distance between the fixed pivot thereof and its pivotal connection to the other link is considerably greater than the distance between the line connecting such fixed pivot and such pivotal connection and the point of connection between such link and the movable contact, and wherein the jogged link is considerably longer than the operating link, and has its contact mounting point nearer its fixed pivot end than its other end.

4. A construction of the character described in claim 1 wherein the operating link has an accessible end whereby it may be utilized as an operating handle for the switch.

WILLIAM H. FRANK.
JOSEPH A. MESSING.